Honda VFR400R Motocycle Parts Manual

1

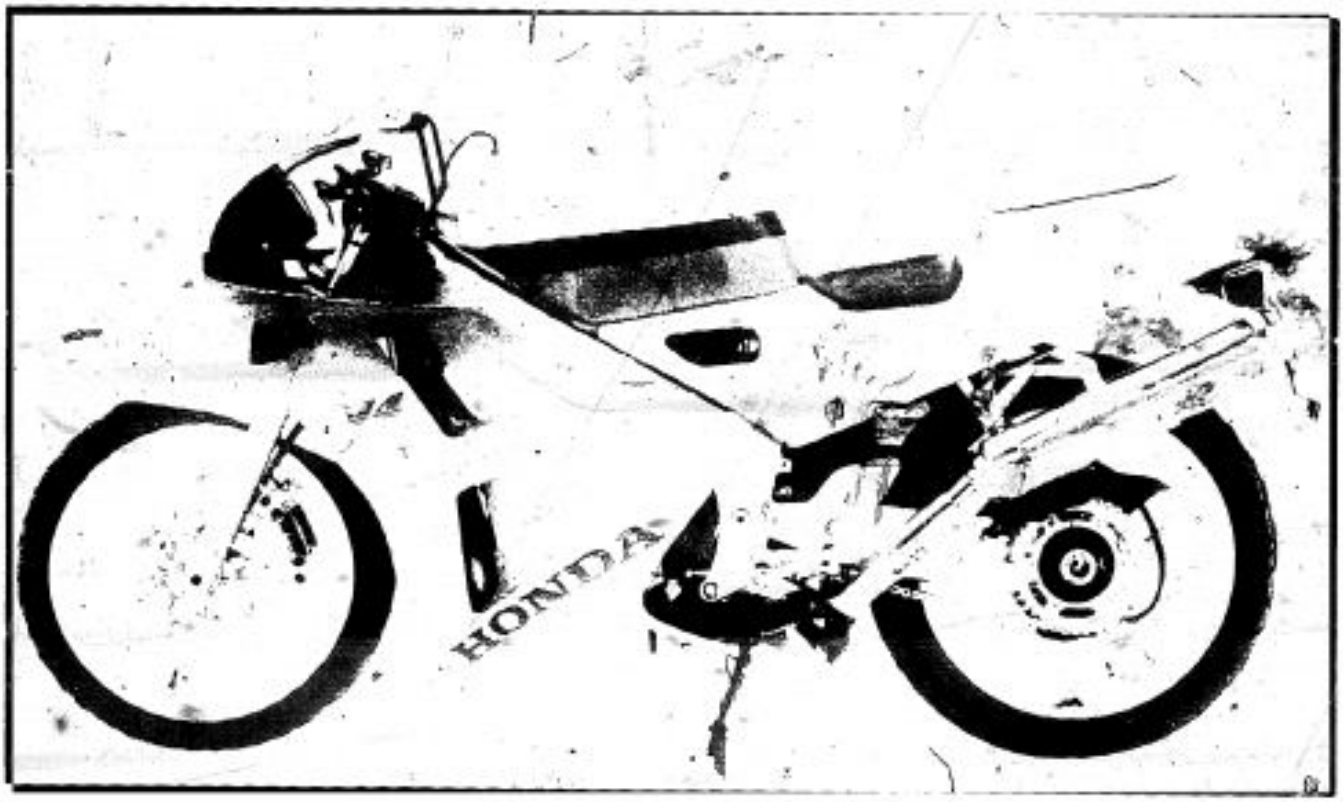

VFR400RHL-E

CONTENTS

	Address No.
●Model photograph	B 1
●Instruction for use of parts catalogue	B 3
I . How to order parts	B 3
II . How to read this parts catalogue	B 3
III. How to use the flat rate time (F.R.T.)	B 12
●Engine group contents	B 14
●Frame group contents	C 1
●Engine group	D 1
●Frame group	G 1
●Part No. index	K 1
●Part name index	L 1

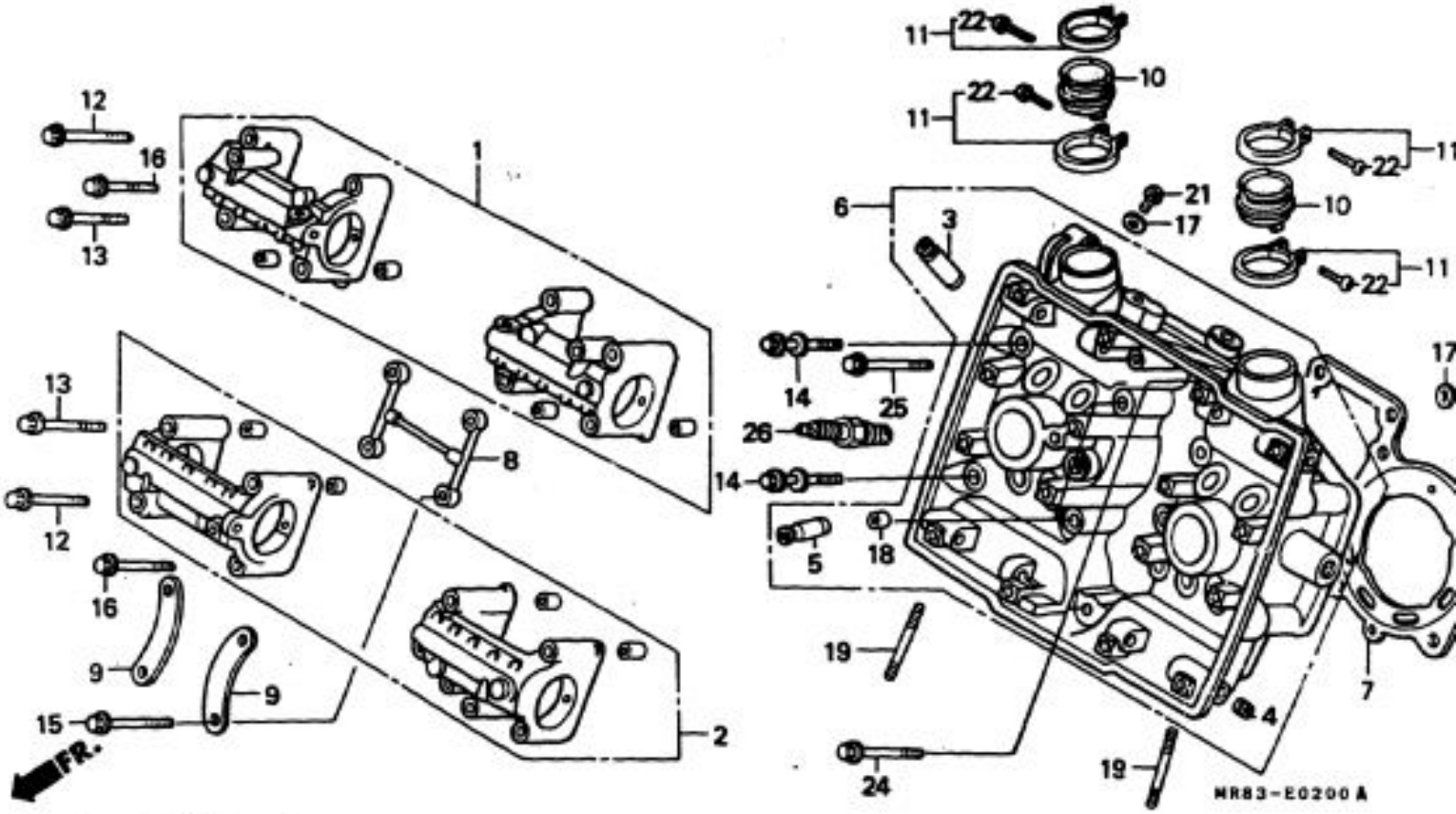

Ref. No.	Part No.	Description	Reqd. No. VFR[illegible]R 1L	1M	Serial No.	Area code
1	12011-MR8-305	HOLDER SET, CAMSHAFT (AB).....	1	1		
2	12012-MR8-305	HOLDER SET, CAMSHAFT (CD).....	1	1		
3	12204-ML0-305	GUIDE, VALVE (O.S.).....	4	4		
4	12205-MR8-300	PLUG, SEALING SPECIAL.....	4	4		
5	12206-ML0-305	GUIDE, EX. VALVE (O.S.).....	4	4		
6	12210-MR8-000	HEAD COMP., FR. CYLINDER.....	1	1		
7	12251-MR8-601	GASKET, CYLINDER HEAD.....	1	1		
8	15330-ML0-000	PIPE COMP., OIL PATH.....	1	1		
9	15331-MR8-000	PLATE, OIL PATH PIPE.....	2	2		
10	16211-ML0-720	INSULATOR, CARBURETOR.....	2	2		
11	16219-KE7-010	BAND, INSULATOR.....	4	4		
12	90001-MR8-000	BOLT, SPECIAL, 6X64.....	4	4		
13	90004-ML7-000	BOLT, FLANGE, 6X60.....	4	4		
* 14	90011-MR8-003	BOLT, FLANGE, 8X83.....	4	4		
15	90018-MA6-000	BOLT, FLANGE, 6X77.....	4	4		
16	90102-KE5-000	BOLT, FLANGE, 6X40.....	4	4		
17	90452-323-000	WASHER, THRUST, 5MM.....	2	2		
18	90702-MJ4-000	PIN, DOWEL, 10X10.....	2	2		
19	92900-06020-0E	BOLT 2, STUD, 6X20.....	4	4		
20	93500-05006-0G	SCREW, PAN, 5X6.....	1	1		
21	93500-05020-0G	SCREW, PAN, 5X20.....	1	1		
22	93516-05025-0G	SCREW, PAN, 5X25.....	4	4		
23	94301-10160	PIN, DOWEL, 10X16.....	2	2		
24	95701-06045-08	BOLT, FLANGE, 6X45.....	2	2		
25	95701-06060-08	BOLT, FLANGE, 6X60.....	1	1		

1991.05.01 E D2

PDF DOWNLOAD

Thank you very much
for your reading.
Please click here
to get more information.