8430 and 8630 Tractors

JOHN DEERE

TECHNICAL MANUAL

8430 and 8630
Tractors

TM1143 (01NOV86) English

John Deere Tractors Works
TM1143 (01NOV86)

LITHO IN U.S.A.
ENGLISH

D C G

TM1143 01NOV86

8430 AND 8630 TRACTORS
TECHNICAL MANUAL
TM-1143 (Feb-79)

CONTENTS

SECTION 10—GENERAL
- Group 5 - General Tractor Specifications
- Group 10 - Predelivery, Delivery and After-Sale Services
- Group 15 - Tune-Up
- Group 20 - Lubrication
- Group 25 - Separation
- Group 30 - Specifications and Special Tools

SECTION 20—8430 ENGINE
- Group 5 - General Information, Diagnosis and Tests
- Group 10 - Cylinder Head, Valves and Camshaft
- Group 15 - Cylinder Block, Liners, Pistons and Rods
- Group 20 - Crankshaft, Main Bearings and Flywheel
- Group 25 - Lubrication System
- Group 30 - Cooling System
- Group 35 - Specifications and Special Tools

SECTION 25—8630 ENGINE
- Group 5 - General Information, Diagnosis and Tests
- Group 10 - Cylinder Head, Valves and Camshaft
- Group 15 - Cylinder Block, Liners, Pistons and Rods
- Group 20 - Crankshaft, Main Bearings and Flywheel
- Group 25 - Lubrication System
- Group 30 - Cooling System
- Group 35 - Specifications and Special Tools

SECTION 30—FUEL SYSTEM
- Group 5 - Diagnosing Malfunctions
- Group 10 - Air Intake System
- Group 15 - Diesel Fuel System
- Group 20 - Speed Control Linkage
- Group 25 - Specifications and Special Tools

SECTION 40—ELECTRICAL SYSTEM
- Group 5 - Information and Diagrams
- Group 10 - Electrical Diagnosis
- Group 15 - Delcotron Charging Circuit
- Group 20 - John Deere Charging Circuit
- Group 25 - Delco-Remy Starting Circuit
- Group 30 - John Deere Starting Circuit
- Group 35 - Lighting Circuits
- Group 40 - Instrument and Accessory Circuits
- Group 45 - Remote Electrical Circuits
- Group 50 - Specifications and Special Tools

SECTION 50—POWER TRAIN
- Group 5 - Perma-Clutch™
- Group 10 - Quad-Range Planetary
- Group 15 - Independent PTO
- Group 20 - Torque Divider
- Group 25 - Quad-Range® Transmission
- Group 30 - Differentials and Drive Shafts
- Group 35 - Final Drives
- Group 40 - Specifications and Special Tools

SECTION 60—STEERING AND BRAKES
- Group 5 - General Information

SECTION 70—HYDRAULIC SYSTEM
- Group 5 - General Information
- Group 6 - Hydraulic System Testing and Diagnosis
- Group 10 - Miscellaneous Hydraulic Components
- Group 15 - Hydraulic Pumps
- Group 20 - Power Steering
- Group 25 - Power Brakes
- Group 30 - Rockshaft and Implement Hitches
- Group 35 - Selective Control Valves, Breakaway Couplers and Remote Cylinders
- Group 40 - Specifications and Special Tools

SECTION 80—SOUND-GARD BODY®
- Group 5 - Separation
- Group 10 - Air Conditioning System
- Group 15 - Heating System
- Group 20 - Seat
- Group 25 - Miscellaneous Components
- Group 30 - Specifications and Special Tools

SECTION 90—MISCELLANEOUS
- Group 5 - Wheels
- Group 10 - Specifications

Copyright© 1979
DEERE & COMPANY
Moline, Illinois
All rights reserved

All information, illustrations and specifications contained in this technical manual are based on the latest information available at the time of publication. The right is reserved to make changes at any time without notice.

A-OO

Litho in U.S.A.

INTRODUCTION

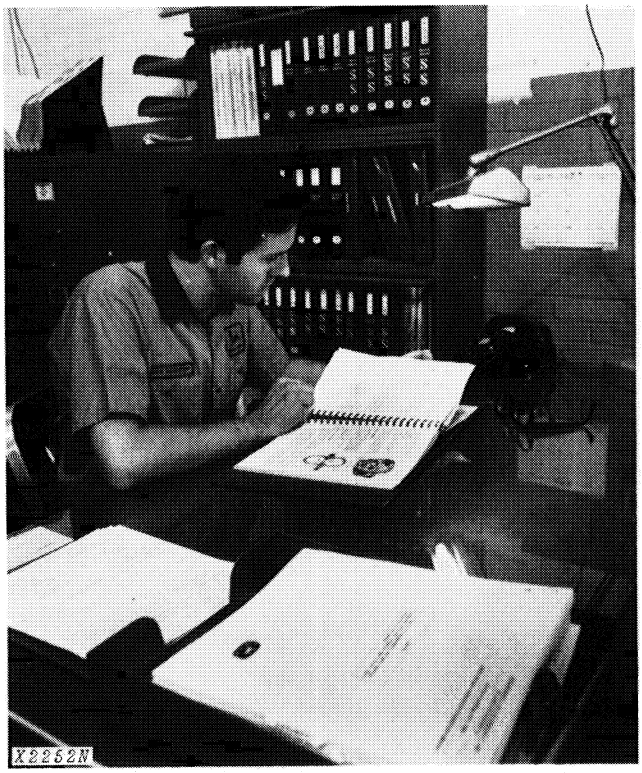

Use FOS Manuals for Reference

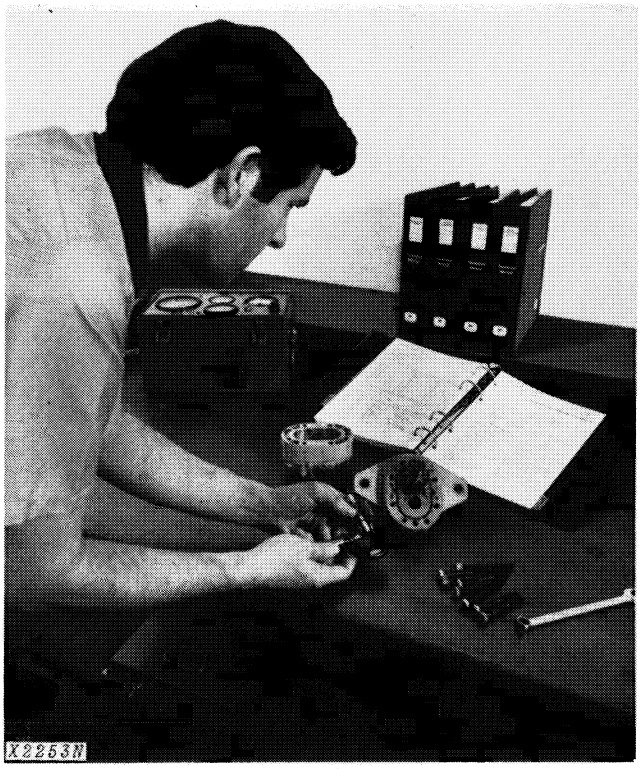

Use Technical Manuals for Actual Service

This technical manual is part of a twin concept of service:

- **FOS Manuals—for reference**
- **Technical Manuals—for actual service**

The two kinds of manuals work as a team to give you both the general background and technical details of shop service.

Fundamentals of Service (FOS) Manuals cover *basic* theory of operation, *fundamentals* of trouble shooting, *general* maintenance, and *basic* types of failures and their causes. FOS Manuals are for training new personnel and for reference by experienced technicians.

Technical Manuals are concise service guides for a *specific* machine. Technical Manuals are on-the-job guides containing only the vital information needed by an experienced technician.

When a service person should refer to a FOS Manual for more information, a FOS symbol like the one at the left is used in the TM to identify the reference.

Some features of this technical manual:

- *Table of contents at front of manual*
- *Exploded views showing parts relationship*
- *Photos showing service techniques*
- *Specifications grouped for easy reference*

This technical manual was planned and written for you—an experienced technician. Keep it in a permanent binder in the shop where it is handy. Refer to it whenever in doubt about correct service procedures or specifications.

Using the technical manual as a guide will reduce error and costly delay. It will also assure you the best in finished service work.

This safety alert symbol identifies important safety messages in this manual. When you see this symbol, be alert to the possibility of personal injury and carefully read the message that follows.

Litho in U.S.A.

Section 10
GENERAL

CONTENTS OF THIS SECTION

Page

GROUP 5 - GENERAL TRACTOR SPECIFICATIONS 5-1

GROUP 10 - PREDELIVERY, DELIVERY, AND AFTER-SALE SERVICES
- Predelivery Services 10-1
- Delivery Services 10-3
- After-Sale Services 10-4

GROUP 15 - TUNE-UP
- Preliminary Engine Testing 15-1
- Engine Tune-Up 15-1
- Engine Final Testing 15-3
- Tractor Tune-Up 15-3

GROUP 20 - LUBRICATION
- Lubrication Chart 20-1
- Engine Lubricating Oils 20-2
- Transmission-Hydraulic Oil 20-2
- Greases 20-2
- Storing Lubricants 20-2

GROUP 25 - SEPARATION
- General Information 25-1
- Drive Assembly
  - With Front Drive Support 25-2
  - Without Front Drive Support 25-4
- Engine
  - General Information 25-6
  - Method "A" Separation 25-6
  - Method "B" Separation 25-16
- Clutch Housing 25-20
- Hinge
  - General Information 25-26
  - Between Hinges 25-26
  - Front Hinge 25-31
  - Rear Hinge 25-32
- Torque Divider 25-36
- Transmission 25-37

GROUP 30 - SPECIFICATIONS AND SPECIAL TOOLS
- Specifications 30-1
- Special Tools 30-2

Group 5
GENERAL TRACTOR SPECIFICATIONS

Horsepower:*
- Maximum observed at PTO
  - 8430 ..... 175 (130 kW)
  - 8630 ..... 225 (168 kW)

Engine:
- Type ..... 6-cylinder, in-line, valve-in-head, diesel, turbocharged, and intercooled
- Engine Speeds:
  - Slow idle ..... 800 rpm
  - Working range ..... 1500 to 2100 rpm
  - Maximum transport speed ..... 2300 rpm
- Bore and stroke
  - 8430 ..... 4.56 x 4.75 in. (11.6 x 12.1 cm)
  - 8630 ..... 5.12 x 5 in. (13.0 x 12.7 cm)
- Displacement
  - 8430 ..... 466 cu. in. (7636 cm^3)
  - 8630 ..... 619 cu. in. (10 143 cm^3)
- Compression ratio
  - 8430 ..... 15.5 to 1
  - 8630 ..... 15.4 to1
- Firing order 1-5-3-6-2-4
- Valve clearance ..... 8430....see 20-10-5
  8630....see 25-10-5
- Injection pump timing ..... TDC

Lubrication System ..... Force-feed pressurized with full-flow oil filter and by-pass

Fuel System:
- Type ..... Direct injection
- Injection pump type ..... Multiple plunger, in-line
- Air cleaner ..... Dry type with safety element

Cooling System:
- Type ..... Pressurized with centrifugal pump
- Temperature controlled by heavy-duty thermostats
  - 8430 ..... 2 thermostats
  - 8630 ..... 3 thermostats

Litho in U.S.A.

Capacities:

Fuel tank ..... 78 U.S. gals. (295 l) each tank
Crankcase (with filter change)
8430 ..... 22 U.S. qts. (21 l)
8630 ..... 26 U.S. qts. (25 l)
Transmission-hydraulic system ..... 34 U.S. gals. (129 l)
Cooling system
8430 ..... 40 U.S. qts. (38 l)
8630 ..... 44 U.S. qts. (42 l)
Front differential ..... 7 U.S. gals. (26 l)

Quad-Range Transmission:

Type ..... 2 speed, Power Shift planetary and 8 speed, syncro-range transmission with constant mesh gears
Perma-Clutch .... Hydraulically operated multiple-disk wet clutch
Gear selections ..... 16 forward and 4 reverse
Shifting
Range selector lever ... Collar shifted between ranges
Speed selector lever
Forward-rearward lever movement ... Mechanical synchronized forward speed shifting of syncro-range transmission
Sideways lever movement ..... Power Shift planetary transmission speeds

Ground speeds at 2100 engine rpm, 18.4-34 tires

Range	Speed	mph	(km/h)
A	1	2.1	(3.3)
	2	2.6	(4.2)
	3	3.7	(6.0)
	4	4.8	(7.7)
	1R	3.8	(6.2)
	2R	5.0	(8.0)
B	1	4.6	(7.3)
	2	5.9	(9.5)
	3	8.2	(13.2)
	4	10.6	(17.1)
	1R	8.5	(13.8)
	2R	11.1	(17.9)
C	1	5.3	(8.6)
	2	6.9	(11.1)
	3	9.6	(15.5)
	4	12.5	(20.1)
D	1	8.6	(13.9)
	2	11.2	(18.0)
	3	15.6	(25.1)
	4	20.3	(32.6)

Electrical System:

Type ..... 12-volt, negative grounded
Batteries
8430 ..... Two, 6-volt, connected in series. 5D type; 800 amps cold cranking at 0°F (-17.8°C); 340 minutes reserve capacity at 25 amps
8630 ..... Two, 6-volt, connected in series; 4 type, 880 or 975** amps cold cranking at 0°F (−17.8C); 420 minutes reverse capacity at 25 amps
Alternator ..... 12-volt, with transistorized regulator; 72 amp

Power Take-Off:

Type ..... Independent PTO with rear power take-off controlled by hand-operated clutch lever
Clutch ..... Multiple disk, wet clutch, hydraulically actuated
Speed (2100 engine rpm) ..... 1000 rpm

Hydraulic System:

Type ..... Closed center, constant pressure. Includes power steeing, power brakes, implement control, and transmission and differential lubrication
Standby pressure ..... 2300 psi (15.8 MPa)

Brakes ..... Hydraulically power-actuated disk-type operating in oil

Tires (standard)* ..... 18.4-34, 6-ply rating

Wheel Tread: ..... See operator's manual

Dimensions:

Wheel base ..... 125 in. (3.175 m)
Over-all length ..... 223.5 in. (5.677 m)
Over-all height to top of muffler ..... 134.5 in. (3.416 m)
Over-all width-reg. axle ..... 95.8 in. (2.434 m)
-long axle ..... 118.4 in. (3.008 m)
Turning radius (80-in. [2.03 m] tread) ..... 223 in. (5.67 m)

Shipping Weight (With equipment for average field service, less fuel and ballast)
8430 ..... 22,010 lbs. (9 984 kg)
8630 ..... 24,150 lbs. (10 954 kg)

**Additional tires sizes available*
***Later models*

Group 10
PREDELIVERY, DELIVERY AND AFTER-SALE SERVICE

PREDELIVERY SERVICE

Because of the shipping factors involved, plus extra finishing touches that are necessary to promote customer satisfaction, proper predelivery service is of prime importance to the dealer.

A tag pointing out the factory-recommended procedure for predelivery service is attached to each new tractor before it leaves the factory.

After completing the factory-recommended dealer checks and services listed on the predelivery tag, remove the tag from the tractor and file it with the shop order for the job. The tag will certify that the tractor has received the proper predelivery service when the portion of the customer's John Deere Delivery Receipt is completed.

NOTE: A Caplug is placed in the muffler outlet to prevent turbocharger rotation during transit. Remove Caplug before unloading tractor. Reinstall Caplug before transporting the tractor to the customer.

Temporary Tractor Storage

Service	Specification	Reference
Check radiator for coolant loss and antifreeze protection	1-1/2 in. (38 mm) above baffle in radiator top tank.	
Reduce shipping pressure of tires		Operator's manual
Cover tractor and tires for protection and cleanliness		

Before Delivering Tractor

ELECTRICAL SYSTEM

Charge batteries		FOS - 20 Manual
Install light switch knob		
Clean terminals and connect battery cables		Section 40, Group 5
Check alternator belt adjustment	85-94 ft-lb (378 to 423 N)	Operator's manual

COOLING SYSTEM

Inspect radiator for coolant loss	1-1/2 in. (38 mm) above baffle in radiator top tank.	
Check antifreeze protection		
Tighten radiator hose clamps		
Tighten hose connections		

Litho in U.S.A.

Before Delivering Tractor—Continued

Service	Specification	Reference
TIRES AND WHEELS		
Adjust pressure of tires		Operator's manual
Check wheel rim clamp nuts and wheel retainer cap screws for tightness	Rim clamp nuts—170 ft-lbs (230 Nm) Retainer cap screws—300 ft-lbs (407 Nm)	
For single wheel operation, set front and rear wheel tread to a minimum of 80 in. (2.03 m) and add at least 1000 lb. (454 kg) ballast to each wheel		Operator's Manual
For hillside operation, use double wheels only		Operator's Manual
LUBRICATION		
Check crankcase oil level	To upper marks on dipstick	Operator's manual
Check transmission-hydraulic system oil level	To top of "SAFE" range on dipstick. John Deere Hy-GARD™ Transmission and Hydraulic Oil	Operator's manual
Check front differential oil level	To level of filler plug opening. SAE 90 gear lubricant	Operator's manual and Section 50, Group 30
Lubricate grease fittings	John Deere Multipurpose Lubricant	Operator's manual
ENGINE		
Check air cleaner		Operator's manual
Tighten air intake hose clamps		
Fill fuel tank and start engine	Capacity 78 U.S. gallons (295 l) each tank	Operator's manual
Check operation of starter, alternator, flasher, gauges, and indicator lights		Operator's Manual
Check engine timing	TDC	Section 20, Group 10
Check engine speeds	800 rpm, slow idle speed 2300 rpm, fast idle speed	Section 30, Groups 15 and 20

Litho in U.S.A.

Before Delivering Tractor—Continued

Service	Specification	Reference
OPERATION		
Shift transmission through all speeds		Operator's manual
Check throttle linkage for free operation		Section 30, Group 20
Adjust headlights and check operation		Operator's manual
Check power takeoff operation		Operator's manual
Check brakes and accumulator	3 in. (7.6 cm) maximum travel when brakes have been bled, and accumulator is working properly	Operator's manual
Check air conditioning, heater, and pressurizer operation		Operator's manual
Check hydraulic system operation; steering, rockshaft, and remote cylinder		Operator's manual
Check seat operation		Operator's manual
GENERAL		
Tighten accessible nuts and cap screws		
Clean tractor and touch up paint		

DELIVERY SERVICE

A thorough discussion of the operation and service of a new tractor at the time of delivery helps to assure complete customer satisfaction. Proper delivery should be an important phase of a dealer's program. A portion of the John Deere Delivery Receipt emphasizes the importance of proper delivery service.

Many complaints have arisen simply because the owner has not shown how to operate and service his new tractor properly. Spend enough time, at the customer's convenience, to introduce the owner to his new tractor and explain to him how to operate and service it properly.

IMPORTANT: Install Caplug in muffler outlet if transporting tractor to customer. This will prevent damage to the turbocharger caused by air passing through the turbocharger and rotating it without lubrication when the engine is stopped.

The following procedure is recommended before the service person and owner complete the delivery acknowledgments portion of the delivery receipt.

Using the tractor operator's manual as a guide, be sure that the owner understands these points thoroughly:

1. Controls and instruments.
2. How to start and stop the engine.
3. The importance of the break-in period.
4. How to use liquid or cast-iron ballast.
5. All functions of the hydraulic system.
6. Using the power takeoff.
7. The importance of safety.
8. The importance of lubrication and periodic services.

After explaining and demonstrating the above features, have the owner sign the delivery receipt and give him the operator's manual.

Litho in U.S.A.

AFTER-SALE INSPECTION

The purchaser of a new John Deere tractor is entitled to a free inspection within the warranty period after the equipment has been "run in." The terms of this after-sale inspection are outlined on the back of the John Deere Delivery Receipt.

The purpose of this inspection is to make sure that the customer is receiving satisfactory performance from his tractor. At the same time, the inspection should reveal whether or not the tractor is being operated, lubricated, and serviced properly.

If the recommended after-sale service inspection is followed, the dealer can eliminate a needless volume of service work by preventing minor irregularities from developing into serious problems later on. This will promote strong dealer-customer relations and present the dealer an opportunity to answer questions that may have arisen during the first few days of operation. During the inspection service, the dealer has the further opportunity of promoting the possible sale of other new equipment.

The following inspection program is recommended within the first 100 hours of tractor operation.

Inspection Procedure

Service	Specification	Reference
COOLING SYSTEM		
Check radiator coolant level	1-1/2 in. (38 mm) above baffle in radiator top tank	
Clean external surface of radiator core		
Tighten hose clamps and check connections for leaks		
FUEL SYSTEM		
Remove water and foreign matter from filter sediment bowl		Operator's manual
Bleed fuel system		Operator's manual
Tighten loose connections and check entire system for leaks, correct if necessary		
Check air cleaner elements and aspirator. Clean primary element if necessary		Operator's manual
ELECTRICAL SYSTEM		
Check specific gravity of batteries	Full charge - 1.260 at 80°F (27°C)	Operator's manual
Check level of battery electrolyte	To bottom of filler neck in each cell	Operator's manual Operator's manual
Check alternator belt tension	85-94 lbs. (378-423 N)	Operator's manual

Inspection Procedure—Continued

Service	Specification	Reference
Start engine and check operation of starter, lights, and indicator lamps		Operator's manual
LUBRICATION		
Check crankcase oil level	To upper marks on dipstick	Operator's manual
Check transmission-hydraulic system oil level	In "SAFE" range on dipstick. Use John Deere Hy-GARD Transmission and Hydraulic Oil	Operator's manual
Check front differential oil level	To level with filler plug opening Use SAE 90 Gear Lubricant	Operator's manual and Section 50, Group 30
ENGINE		
Check valve clearance	Intake: 0.013 to 0.017 in. (0.33 to 0.43 mm) Exhaust: 0.023 to 0.027 in. (0.58 to 0.68 mm)	
Check engine speed under load, fuel consumption, and horsepower	Specification	Group 15 of this Section.
Check air intake connections		
TRACTOR AND POWER TRAIN		
Shift transmission through all speeds		Operator's manual
Check power steering	Smooth, easy operation	Section 70, Group 20
Check brakes and accumulator	3 inches (7.6 cm) maximum brake travel when brakes have been bled and accumulator is working properly	Operator's manual

*Later model 6619 engine

Inspection Procedure—Continued

Service	Specification	Reference
HYDRAULIC SYSTEM		
Check rockshaft and remote cylinder operation		Section 70, Group 30 and 35
Check entire tractor for leaks. Inspect drive shafts, hydraulic system pipes and hoses, and check tractor cab controls for proper operation		Operator's manual
NUTS AND CAP SCREWS		
Tighten accessible nuts and cap screws that seem to require adjustment		

TORQUE CHART

Diameter	B-Grade*		D-Grade*		F-Grade*		G-Grade*	
	lb-ft	Nm	lb-ft	Nm	lb-ft	Nm	lb-ft	Nm
1/4 inch	6	(8.1)	10	(13.6)	14	(19)	15	(20.3)
5/16 inch	13	(17.6)	20	(27.1)	30	(40.7)	32	(42.4)
3/8 inch	23	(31.2)	35	(47.5)	50	(67.8)	56	(75.9)
7/16 inch	35	(47.5)	55	(74.6)	80	(108.5)	92	(124.7)
1/2 inch	55	(74.6)	85	(115.3)	120	(162.7)	140	(189.8)
9/16 inch	75	(101.7)	130	(176.3)	175	(237.3)	200	(271.2)
5/8 inch	105	(142.4)	170	(230.5)	240	(325.4)	280	(379.7)
3/4 inch	185	(250.9)	300	(406.8)	425	(576.3)	497	(673.9)
7/8 inch	160	(217)	445	(603.4)	685	(928.9)	800	(1084.8)
1 inch	250	(339)	670	(908.5)	1030	(1396.7)	1200	(1627.2)

**The types of bolts and cap screws are identified by head markings as follows:*

Plain Head: regular machine bolts and cap screws.

3-Dash Head: tempered steel high-strength bolts and cap screws.

6-Dash Head: tempered steel extra high-strength bolts and cap screws.

12 9 or 12.9: tempered steel extremely high-strength bolts and cap screws.

Litho in U.S.A.

Group 15
TUNE-UP

Before tuning up a tractor, determine whether a tune-up will restore operating efficiency. When there is doubt, the following preliminary tests will help to determine if the engine can be tuned up. If the condition is satisfactory, proceed with the tune-up. Choose from the following procedures only those necessary to restore the unit.

Preliminary Engine Testing

Operation	Specification	Section-Group Reference
Dynamometer Test (at 2100 engine rpm full load) ... (See Page 15-4 for PTO-Engine Speed relationship)	Compare with previous recorded output; compare with output after tune-up	FOS - 30 Manual, Chapter 12
Compression Test	330-380 at 200-250 rpm	FOS - 30 Manual, Chapter 12
Engine Coolant Check Test	No air bubbles or oil film in radiator	FOS - 30 Manual, Chapter 12

Engine Tune-up

Operation	Specification	Section-Group Reference
Air Intake System		
Service air cleaner and check system for leaks	.....	FOS - 30 Manual, Chapter 12
Manifold pressure	Reading at 2100 rpm 8430 - 19 to 23 psi (131 to 159 kPa) 8630 - 14 to 17 psi (95 to 117 kPa) .	30-10
Check system for restrictions using water manometer.....	.....	FOS - 30 Manual, Chapter 12
Normal reading, inches of water (with clean filter elements).....	16 in. (40.6 cm) at 2100 rpm (full load)	.....
Maximum permitted reading.....	25 in. (63.5 cm) at 2100 rpm (full load)	.....
Check restriction indicator light operation	24-26 in. (61.0-66.0 cm)	.....
Exhaust System		
Check system for leaks	.....	FOS - 30 Manual, Chapter 12
Check muffler and exhaust pipe for restrictions	.....	FOS - 30 Manual, Chapter 12

Litho in U.S.A.

Engine Tune-up—Continued

Operation	Specification	Section-Group Reference
Crankcase Ventilating System		
Check system for restrictions		FOS -30 Manual, Chapter 12
Cooling System		
Clean grill screen, radiator core, and oil cooler core		20-30, 25-30
Clean and flush system; check thermostat		20-30, 25-30
Check pressure cap	6.25 to 7.50 psi (43 to 52 kPa) release pressure	20-30, 25-30
Tighten hose clamps		----
Cylinder Head and Valves		
Cylinder head cap screw torque		
8430 (in sequence)	125 to 135 ft-lbs (169 to 183 Nm) - "F" grade cap screws 135 to 165 ft-lbs (183 to 224 Nm) - "G" grade cap screws	20-10
8630 (in sequence)	205 to 215 ft-lbs (278 to 293 Nm)	25-10
Set valve clearance		
8430	Intake: 0.018-in. (0.46 mm) Exhaust: 0.028-in. (0.71 mm)	20-10
8630	Intake: 0.013 to 0.017 in. (0.33 to 0.43 mm) Exhaust: 0.023 to 0.027 in. (0.58 to 0.68 mm)	25-10
Diesel Fuel System		
Check fuel tanks for water		30-15
Check fuel pump pressure	Approx. 20 psi (138 kPa)	30-15
Change filter		30-15
Injection Pump:		
Service and check timing	TDC	30-15
Adjust throttle linkage	2300 rpm fast idle speed	30-20
	800 rpm slow idle speed	30-20
Lubrication system		
Check engine oil pressure (2100 rpm)	40 - 55 psi (275 - 379 kPa) (8430 and 8630)	20-25, 25-25
Charging System		
Check battery specific gravity	1.240 - 1.260	40-10
Check battery water consumption and electrolyte level		40-10
Clean battery, cables, and box		40-10
Check alternator belt tension	85-94 lbs (423 to 467 N)	40-10
Check alternator output	65 amps minimum (2000 engine rpm)	40-10
Check alternator regulated voltage	14.1 - 14.7 volts (operating)	40-10

Engine Tune-Up—Continued

Operation	Specification	Section-Group Reference
Starting System		
Check start-safety switch operation		40-15
Check battery voltage when starting	Min. 9 volts (cranking)	40-15
Check starter current draw	Approx. 525 amps	40-15
Check operation of gauges and indicator lights		40-25

Final Engine Test

Operation	Specification	Section-Group Reference
Dynamometer Test (at 2100 engine rpm)	Compare with previous recorded output; record for future use	FOS - 30 Manual - ENGINES, Chapter 12

Tractor Tune-up

Operation	Specification	Section-Group Reference
Transmission		
Check shifting		50-10 & 20
Check for proper operation without excessive noise		50-20
Power Take-Off		
Check for proper operation without excessive noise		50-15
Check brake pedal travel	3-inch (7.6 cm) maximum travel with brakes bled and with accumulator working properly	70-25
Check tire inflation	See operator's manual	....
Clutch oil pump (at main pump inlet)	10 gpm (0.63 l/s) at 2100 rpm	70-15
Main hydraulic pump	Standby pressure—2200 to 2300 psi (15.2 to 15.9 MPa)	70-15
	Capacity—28.5 gpm (1.79 l/s) at 2000 psi (13.8 MPa) and 1750 rpm	70-15
Pressure control valve	1600 to 1700 psi (11.0 to 11.7 MPa) at 800 rpm	70-10
Selective control valve	3 to 18 gpm (0.19 to 1.14 l/s) at 1500 psi (10.34 MPa) and 1750 rpm	70-35

Tractor Tune-Up—Continued

Operation	Specification	Section-Group Reference
Rockshaft:		
Lift cycle time (75 degrees rotation)	2.7 to 2.9 seconds at 2100 rpm	70-5
Maximum oil flow	16 gpm (1.01 l/s) at 2000 psi (13.8 MPa) and 1900 rpm	70-30
Lever position (ZERO load control)	Just fully raised with lever front edge at "0" on quadrant	70-30

Hydraulic system pressures, flow rates, or cycle times are for conditions specified in Section 70—transmission-hydraulic oil at 140 to 160°F (60 to 71°C), proper test equipment, correct test sequence, etc.

ENGINE-PTO SPEED RELATIONSHIP

Engine RPM	PTO Speed	Rated PTO Horsepower*
2100 (Full load)	993	175 (8430); 225 (8630)
2300 (Fast idle)	1088	—

**Factory Observed.*

Litho in U.S.A.

Group 20
LUBRICATION

GENERAL INFORMATION

Carefully written and illustrated instructions are included in the tractor operator's manual. Remind your customer to follow the recommendations in these instructions.

For your convenience when servicing the tractor, the following chart showing capacities and type of lubricant for the various components has been included. Additional lubrication information is on page 20-2.

Component	Capacity	Type of Lubricant	Interval of Service
Engine Crankcase	22 U.S. quarts (21 L) with filter change (8430) 26 U.S. quarts (25 L) with filter change (8630)	See "Engine Lubricating Oils" in this group	10 Hours - Check level 100 Hours - Change oil 200 Hours - Replace filter and change oil
Transmission and Hydraulic system	34 U.S. gallons (129 L) (dry system) 26 U.S. gallons (98 L) (refill)	John Deere Hy-GARD Transmission and Hydraulic Oil	200 Hours - Check level 600 Hours - Replace filter 1200 Hours - Change oil and filter
Front differential	7 U.S. gallons (26 L)	SAE 90 gear lubricant	1200 Hours - Change oil
Grease Fittings	.....	John Deere Multipurpose Lubricant	See Operator's Manual

Litho in U.S.A.

LUBRICANTS

ENGINE LUBRICATING OILS

We recommend John Deere Torq-Gard™ Supreme engine oil for use in the engine crankcase. Torq-Gard Supreme is compounded specifically for use in John Deere engines and provides superior lubrication under all conditions. NEVER PUT ADDITIVES IN THE CRANKCASE. Torq-Gard Supreme oil was formulated to provide all the protection your engine needs. Additives could reduce this protection rather than help it.

If Torq-Gard Supreme is not used, use an engine oil that conforms to one of the following specifications.

SINGLE VISCOSITY OILS

API Service CD/SD
MIL-L-2104C
Series 3*

MULTI-VISCOSITY OILS

API Service CC/SE, CC/SD, or SD
MIL-L-46152

** As further assurance of quality, the oil should also be identified as suitable for API service designation SD.*

Depending on the expected atmospheric temperature at start for the fill period, use oil of viscosity as shown in the following chart.

Some increase in oil consumption may be expected when SAE 5W-20 or SAE 5W oils are used. Check oil level more frequently.

Air Temperature	John Deere Torq-Gard Supreme Oil	Other Oils: Single Viscosity Oil	Other Oils: Multi-Viscosity Oil
Above 32°F (0°C)	SAE 30	SAE 30	Not recommended
-10 to 32°F** (-23 to 0°C)	SAE 10W-20	SAE 10W	SAE 10W-30
Below -10°F (-23°C)	SAE 5W-20	SAE 5W	SAE 5W-20

*** SAE 5W-20 oil may be used where required to insure optimum lubrication at starting, particularly for an engine subjected to -10°F (-23°C) or lower for several hours.*

TRANSMISSION HYDRAULIC OILS

Use only John Deere Hy-GARD Transmission and Hydraulic Oil or its equivalent in the transmission hydraulic system. Other types of oil will not give satisfactory service and may result in eventual damage. This special oil, available from your John Deere dealer, may be used in all weather conditions.

NOTE: John Deere Hy-GARD Transmission and Hydraulic Oil may be added to or mixed with John Deere Type 303 Special-Purpose Oil.

GEAR LUBRICANT

Use an SAE 90 gear lubricant meeting API service designation GL-5 and military specification MIL-L-2105B in the front differential housing.

GREASES

Use John Deere Multi-Purpose Lubricant or an equivalent SAE multipurpose-type grease for all grease fittings. Application of grease as instructed in the lubrication section will provide proper lubrication and will keep contamination out of bearings.

STORING LUBRICANTS

Your tractor can operate at top efficiency only if clean lubricants are used. Use clean containers to handle all lubricants. Store them in an area protected from dust, moisture, and other contamination.

Litho in U.S.A.

Group 25
SEPARATION

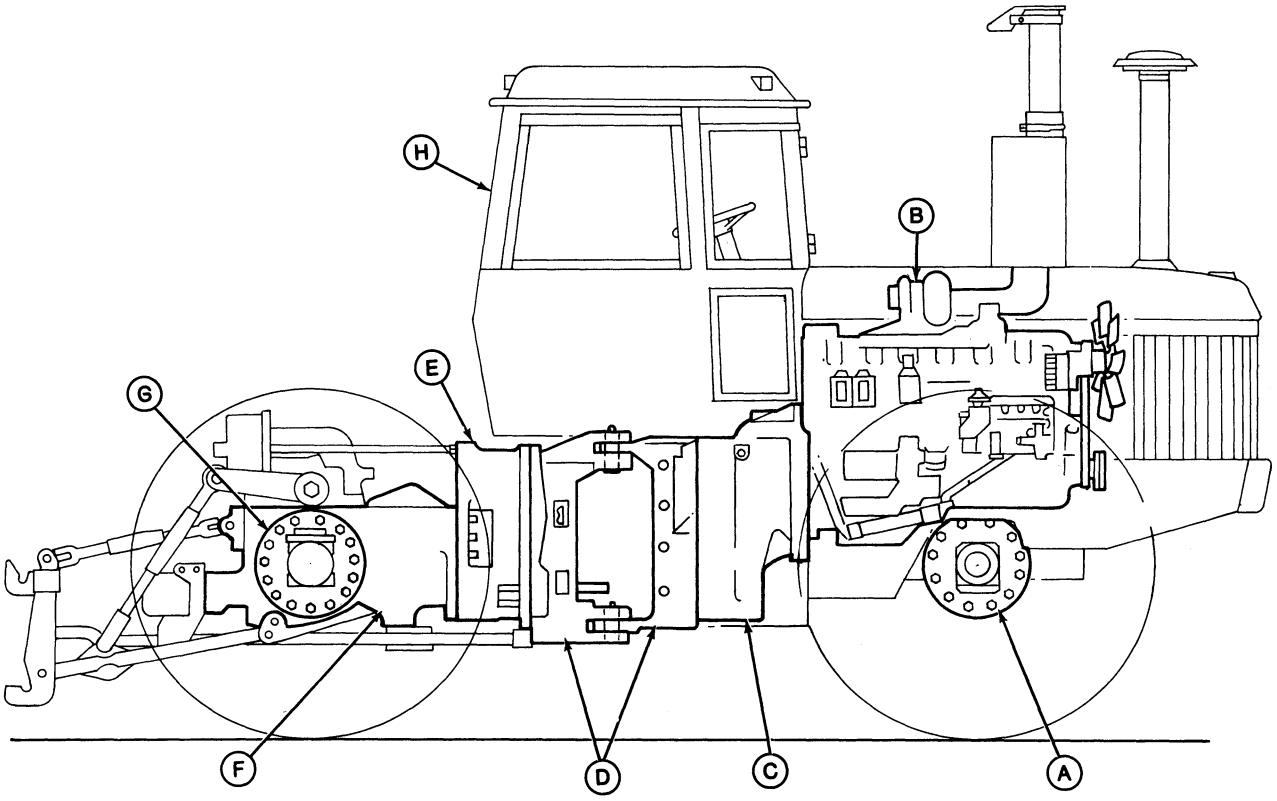

R 25270N

A—Front Drive
B—Engine
C—Clutch Housing
D—Hinge
E—Torque Divider
F—Transmission
G—Final Drive
H—Sound Gard Body

Fig. 1-Basic Separation Components

GENERAL INFORMATION

Separation of the tractor may be subdivided into the following components (Fig. 1): Front drive (A), engine (B), front end, clutch housing (C), front hinge, hinge pin, rear hinge, torque divider (E), transmission (F), final drive (G) and Sound-Gard body (H). Basic separation of these components will be explained within this group, except for the Sound-Gard body covered in Section 80, and final drive covered in Section 50.

⚠ CAUTION: Always use the hinge lock bars, provided with the tractor, whenever front or rear of tractor is raised. See operator's manual for installation of lock bars.

It is important to determine beforehand, which component has to be removed and the best method to use in removing the component, in order to perform the required service in the shortest possible time. For example, it is possible to gain access to the engine clutch two different ways: (1) Removing engine and tractor front end from clutch housing, (2) Removing tractor front end, then removing engine from clutch housing. The method selected will be determined by the total service requirements for any particular job, and on personal choice.

Once a basic component has been removed from the tractor, refer to the appropriate section of this manual for detailed service information.

FRONT DRIVE ASSEMBLY

GENERAL INFORMATION

The front drive assembly may be removed with or without the drive support (C, Fig. 4). Removing the drive with support provides additional room to work on the front portion of the engine. Remove the drive assembly without the support when repair is to be made on the drive assembly only.

WITH FRONT DRIVE SUPPORT

Removal

⚠ CAUTION: Before disconnecting drive shaft, jack up one of the four wheels to relieve any torque that may have built up in the power train. Personal injury could result if drive shaft "unwinds" while it is being disconnected.

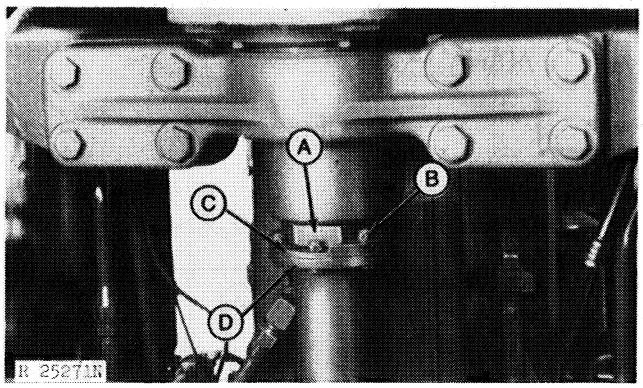

A—Lock Nut
B—Cap Screw And Nut
C—Front Retainer Half
D—Rear Retainer Half

Fig. 2-Front Drive Shaft Spline Coupling

Remove the cap screws (B, Fig. 2) from the coupler retainer (D) and remove retainer. The front and rear halves of the retainer house a split washer that fits into the coupling groove.

Script a line on spline coupling and nut to ease installation.

Move the coupling rearward to disconnect splined pinion shaft from drive shaft (Fig. 3). The coupling may not move easily because of the drag exerted by two O-rings; one on the pinion shaft (E), and one on the drive shaft under coupling. These O-rings retain the gear oil from the front differential used to lubricate the splines on pinion shaft and drive shaft.

If equipped, disconnect front differential vent hose at cap.

Install Lifting Bracket (D-05153ST). See Fig. 7.

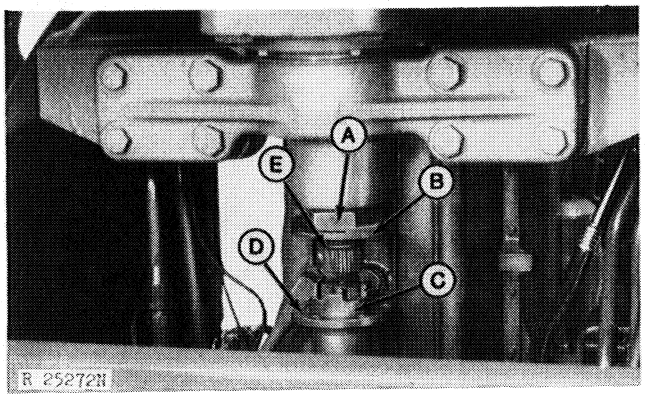

A—Lock Nut
B—Retainer Half
C—Splined Coupling
D—Rear Retainer Half
E—O-Ring

Fig. 3-Drive Shaft Disconnected

Block the rear wheels and position a floor jack under the lifting bar.

Use a jack with a 12-ton load capacity or greater to raise the front end of the tractor.

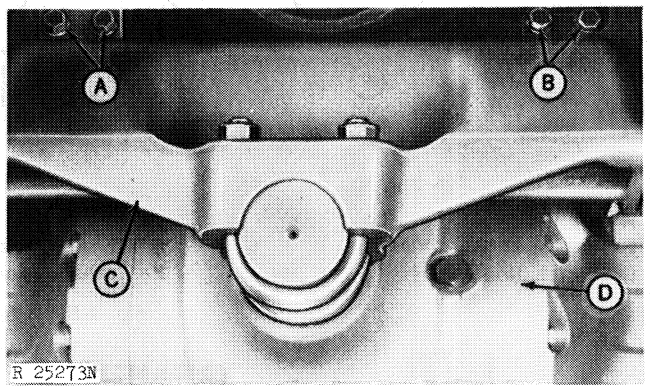

A—3/4 x 3-1/4" Cap Screws
B—3/4 x 3" Cap Screws
C—Front Support
D—Front Differential Case

Fig. 4-Front Drive Support

Remove the four front axle support-to-engine front support cap screws (A and B, Fig. 4) located just inside the side frames at top of axle support.

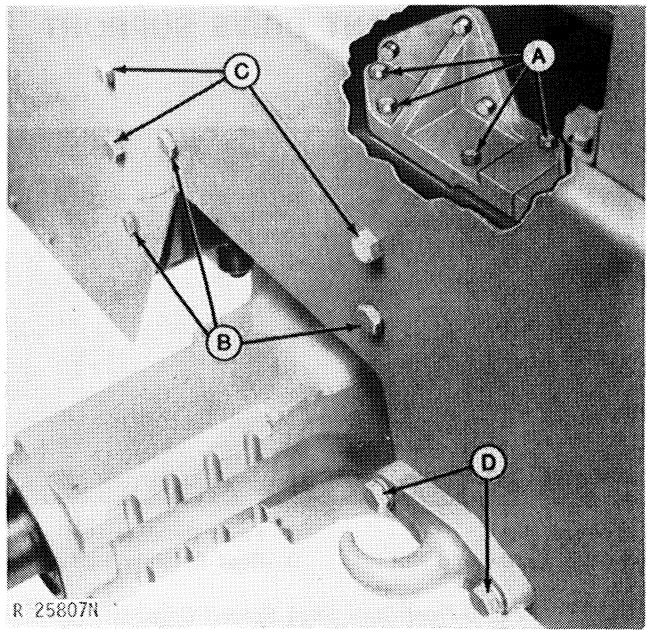

A—Support Cap Screws (5/8" x 2-3/4")
B—Special Hex. Bolt (3/4" x 2-3/4")
C—Cap Screws (3/4" x 1-3/4")
D—Tow Hook Cap Screws (3/4" x 2-3/4")

Fig. 5-Side Frame-To-Support Cap Screws (8630)

Remove the engine support-to-axle support cap screws (A, Fig. 5) from the top of both engine supports. (Using the JDE-36 Adapter makes removal of cap screws easier.)

Remove the three side frame-to-support screws (C, Fig. 5), the three special hex. bolts (B), and the two tow hook cap screws (D) from both sides of tractor.

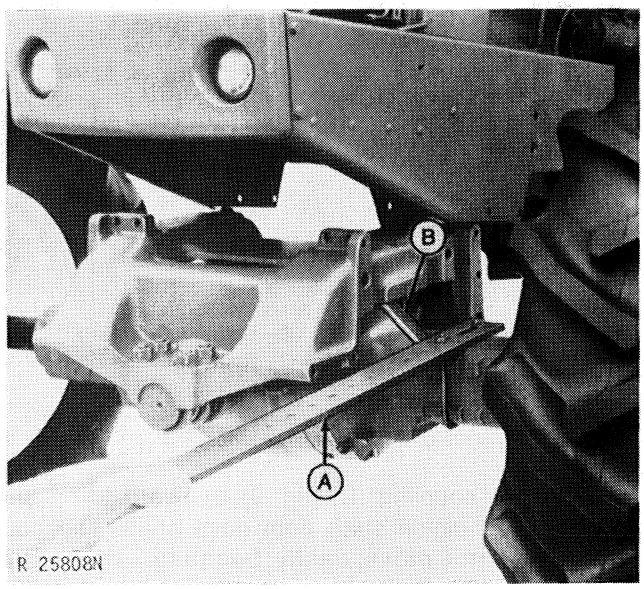

A—Support Bar **B—Hinge Locking Bar**

Fig. 6-Removing Front Drive With Support

⚠ CAUTION: When removing or installing front drive assembly with support, the differential and support may turn upside down if assembly is allowed to get out of balance. Keep differential and support balanced or supported to prevent possible injury.

Fasten a support bar or plate to the front drive housing (A, Fig. 6) to help control the assembly during removal. Insert a hinge locking bar under each side of housing (B, Fig. 6) to prevent tipping during removal. Raise the front end of tractor high enough to permit axle and support to clear side frames. Balance assembly and move out from front of tractor.

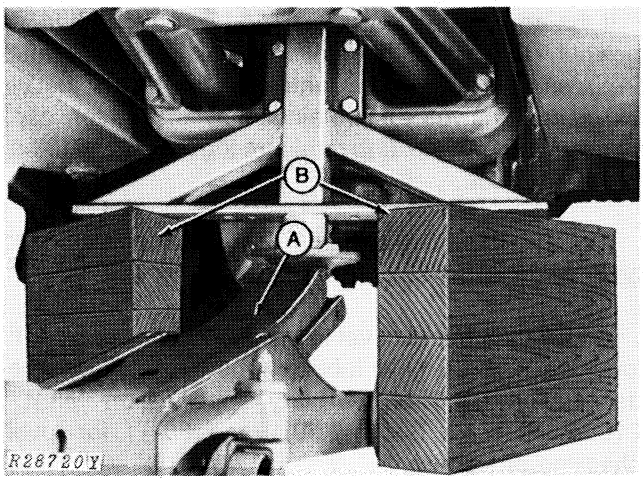

A—Floor Jack Under Lifting Bar **B—Blocking Under Lifting Bar**

Fig. 7-Lifting Bar and Jack

Place blocking under lifting bar (B, Fig. 7) to support tractor while repairing drive housing or support.

WITH FRONT DRIVE SUPPORT—Continued

Installation

Move the drive assembly in position and carefully lower tractor front end into position. Install screws (see Fig. 4 and 5 for sizes) and tighten the side frame-to-support screws to 300 ft-lbs (407 Nm) torque. Tighten the support-to-engine front support screws to 300 ft-lbs (407 Nm) torque.

Inspect the axle drive pinion shaft O-ring (E, Fig. 3) and replace if in poor condition. Lightly lubricate splines on pinion shaft. Move the coupler forward and engage coupler tangs into notches.

If the coupler tangs will not line up with notches in lock nut, raise one of the front final drives with jack until tire is off floor. Rotate tire until splines line up. Install two keeper halves and retainer halves. Tighten cap screws (B, Fig. 2) holding retainers together to 35 ft-lbs (47 Nm) torque.

Remove the lifting bar and floor jack. Install hood, grille screens, air stack and muffler.

Check the gear oil level in the differential housing. If low, use SAE 90 gear lubricant meeting API service designation GL-5 and military specification MIL-L-2105B. Refer to Section 50, Page 30-11 for level checking procedure.

WITHOUT FRONT DRIVE SUPPORT

Removal

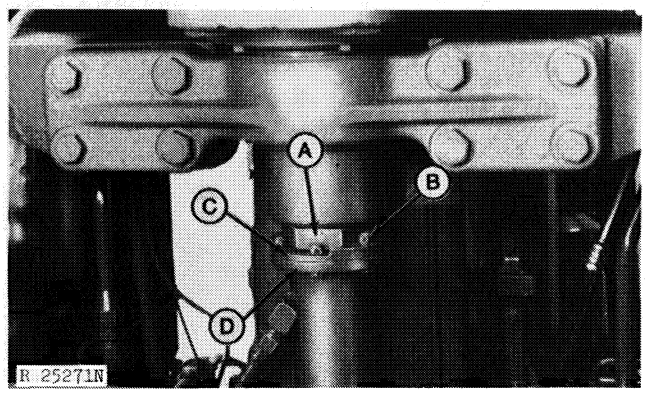

A—Lock Nut
B—Cap Screw and Nut
C—Front Retainer Half
D—Rear Retainer Half

Fig. 8-Front Drive Shaft Splined Coupling

Remove the cap screws (B, Fig. 8) from the coupler retainer and remove retainer. The front and rear halves of the retainer house two keeper halves that fit into the coupling groove.

⚠ CAUTION: Before disconnecting drive shaft, jack up one of the four wheels to relieve any torque that may have built up in the power train. Personal injury could result if drive shaft "unwinds" while it is being disconnected.

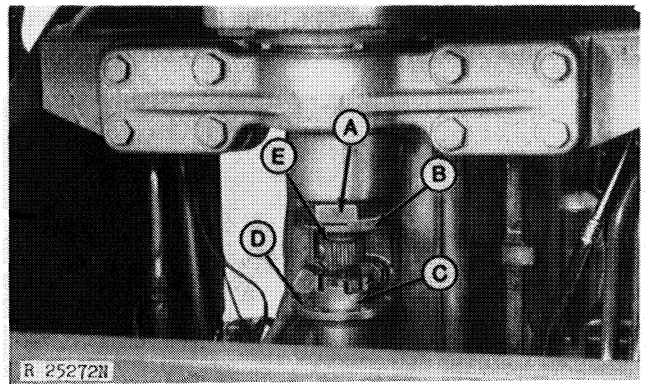

A—Lock Nut
B—Front Retainer Half
C—Splined Coupling
D—Rear Retainer Half
E—O-Ring

Fig. 9-Coupling Disconnected

Move the coupling (C, Fig. 9) rearward to disconnect splined pinion shaft from drive shaft. The coupling may not move easily because of the drag exerted by two O-rings; one on the pinion shaft (E), and one on the drive shaft under coupling. These O-rings retain the gear oil from the front differential used to lubricate the splines on pinion shaft and drive shaft.

If equipped, disconnect front differential vent hose at cap.

Install Lifting Bar (D-05153ST) following manufacturers' instructions.

Block the rear wheels and position a floor jack under the lifting bar.

Use a jack with a 12-ton load capacity or greater to raise the front end of the tractor.

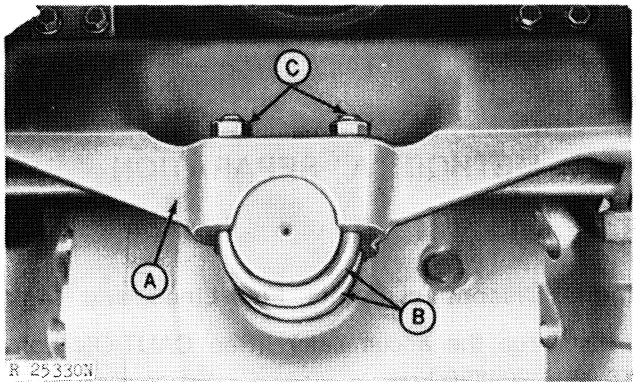

A—Drive Support **C—U-Bolt Nuts**
B—U-Bolts

Fig. 10-Removing U-Bolts

Raise the floor jack enough to take weight off the front drive assembly. Place blocks under lifting bar (Fig. 7). Remove the U-bolt nuts (C, Fig. 10) and U-bolts (B) from drive support (A).

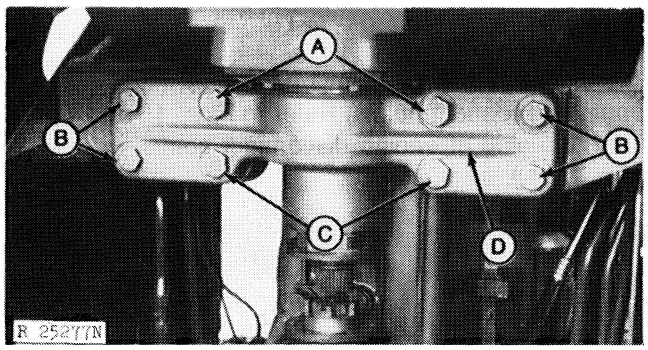

A—7/8" x 4-1/4" Cap Screws **C—7/8" x 3-1/2" Cap Screws**
B—3/4" x 3-1/4" Cap Screws **D—Rear Support**

Fig. 11-Removing Rear Support Cap Screws

Remove the eight front drive rear support cap screws (A, B, and C, Fig. 11).

⚠ CAUTION: Keep differential balanced or supported to prevent possible injury.

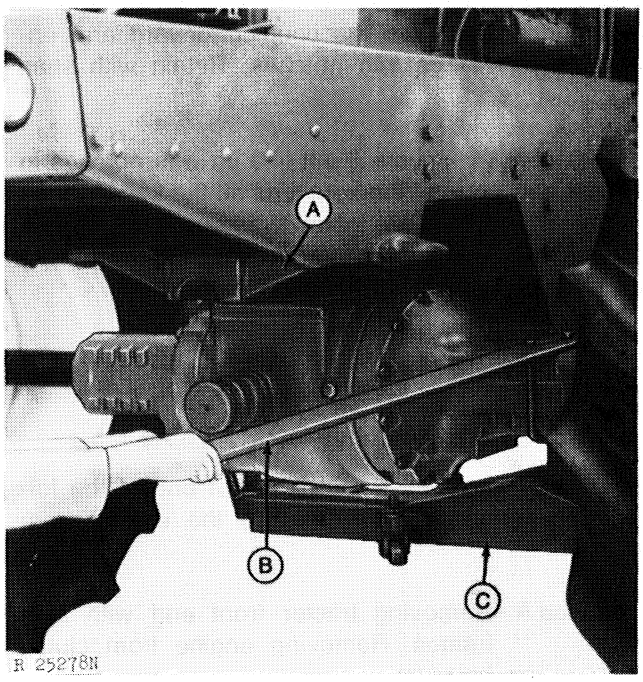

A—Axle Support **C—Floor Jack Under Lifting Bar**
B—Support Bar

Fig. 12-Removing Axle Without Support

Fasten a support bar (B, Fig. 12) to the drive housing to keep assembly from rotating on axles. Raise the front of tractor high enough to allow the drive assembly to be pulled forward from under tractor.

Refer to Section 50, Group 30 and 35 for repair.

Installation

Move the drive assembly in position under tractor. Make sure that the two spacers are in place in drive rear support. Carefully lower front end onto drive assembly.

Install cap screws (see Fig. 11 for sizes) in rear support. Note that the 7/8 x 4-1/4 in. (A) screws are used in the holes having the spacers. Tighten the 3/4-in. screws to 300 ft-lbs (407 Nm) torque, and tighten the 7/8-in. screws to 445 ft-lbs (603 Nm) torque. The U-bolts should be evenly positioned in drive support and the nuts tightened to 450 ft-lbs (610 Nm) torque.

Installation—Continued

Inspect the drive pinion shaft O-ring (E, Fig. 9) and replace if in poor condition. Lightly lubricate splines on pinion shaft. Move the coupler forward and engage coupler tangs into notches. Retain with snap ring.

If the coupler tangs will not line up with notches in lock nut, raise one of the front tires off the floor. Rotate tire until splines line up. Install two keeper halves and retainer halves. Tighten cap screws (B, Fig. 8) holding retainers together to 35 ft-lbs (47 Nm) torque.

Tighten cap screws (B, Fig. 8) holding retainers together to 35 ft-lbs (47 Nm) torque.

Remove the lifting bar, floor jack and blocks.

Check the gear oil level in the differential housing. If low, use SAE 90 gear lubricant meeting API service designation GL-5 and military specification MIL-L-2105B. Refer to Section 50, Page 30-11 for level checking procedure.

ENGINE

GENERAL INFORMATION

Evaluate, and then select the best one of the following two methods of removing the engine from chassis:

Method A - Removing tractor front end with side frames; Removing engine from clutch housing -
This method provides the best accessability to many components besides the engine. Requires removal of the fuel tanks and side frames from front hinge.

Method B - Removing engine, tractor front end, and side frames from clutch housing and hinge; Removing engine from side frames -
Probably the best method to use for gaining access to the engine clutch. Requires removal of fuel tanks and side frames.

⚠ CAUTION: Before separating tractor, be sure that the brake accumulator is discharged. The accumulator can be discharged by opening the right-hand brake bleed screw, and pumping the brake pedal until brake pedal goes all way down. Make sure no one is close to tractor when starting engine or that no one works around hinge with the engine running.

METHOD "A" SEPARATION

Removal

Engine Disconnect Points, Fuel Lines, and Tank

Discharge the accumulator. (See CAUTION from previous column.)

Remove muffler, air stack, grille screens, and hood. Disconnect battery ground cable. Drain cooling system.

Disconnect front drive shaft from front drive. (See previous instruction under FRONT AXLE DRIVE ASSEMBLY for instructions.)

If equipped, disconnect front differential vent hose at Hi-Lo bearing quill.

Refer to Figs. 13 and 14 for right-hand side of engine disconnect points. Refer to Figs. 15 and 16 for left-hand side of engine disconnect points.

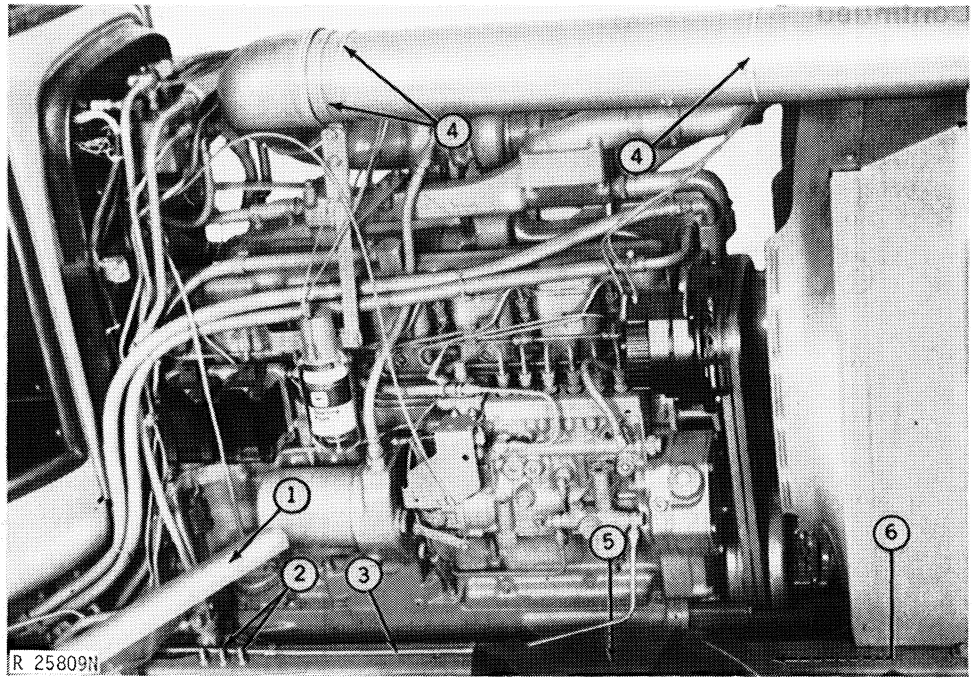

Fig. 13-Right-Hand Removal Procedures (8430)

1. Remove both fuel tanks. Refer to Section 30, Group 15 for removal procedure.
2. Disconnect grease fittings from top of side frames. Hold fitting body with wrench and remove lock nut on top. Place lock nut back on fitting after removal.
3. Remove fuel inlet line to the injection pump. Line is held to frame by two clamps.
4. Cut plastic straps from air intake pipe and remove support from pipe. Loosen clamp at rear of turbo charger and at air cleaner. Remove intake as one piece.
5. Use a JDE-36 Wrench and remove the engine support-to-axle drive support cap screws from engine mounting supports.
6. Remove the four front axle support-to-engine front support cap screws.

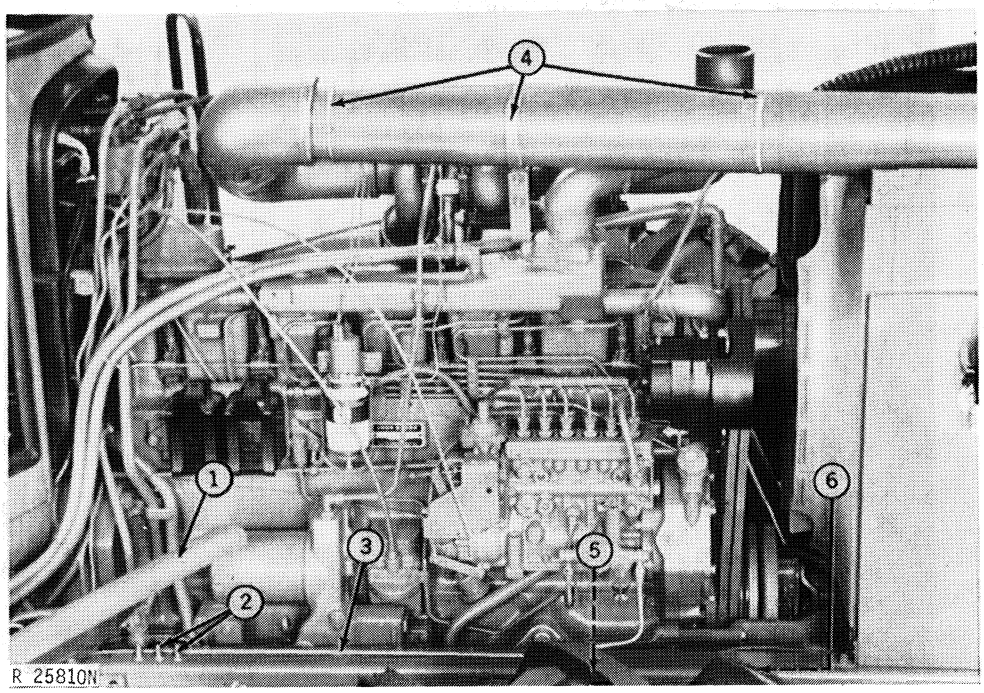

Fig. 14-Right-Hand Removal Procedures (8630)

Removal—Continued

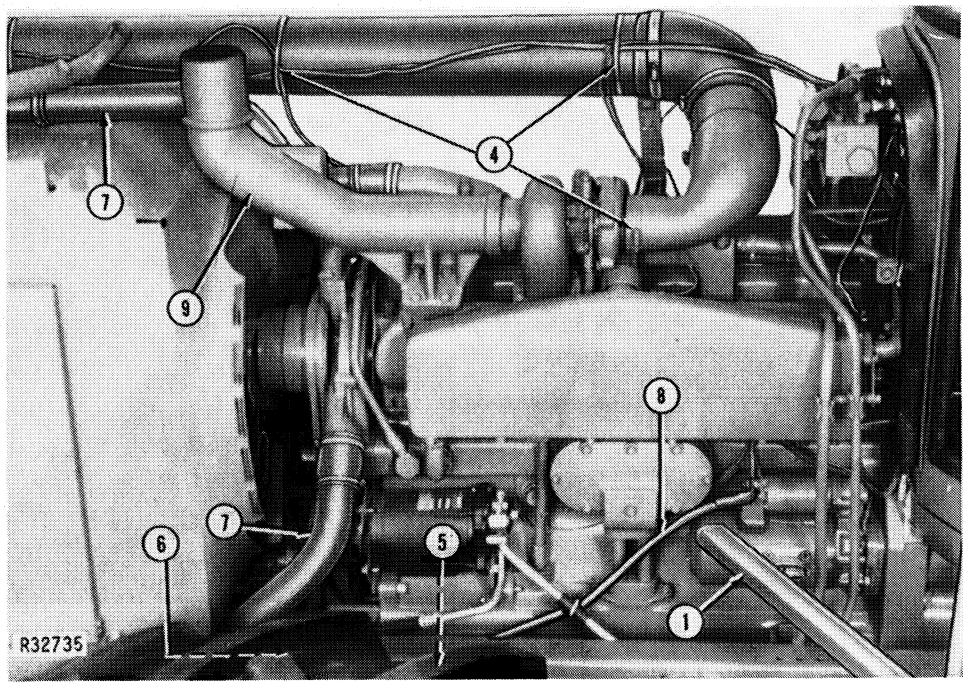

Fig. 15-Left-Hand Removal Procedures (8430)

7. Disconnect the upper and lower radiator hoses from radiator.
8. Disconnect battery-to-starter cable from starter.
9. Remove exhaust elbow (8430 only).

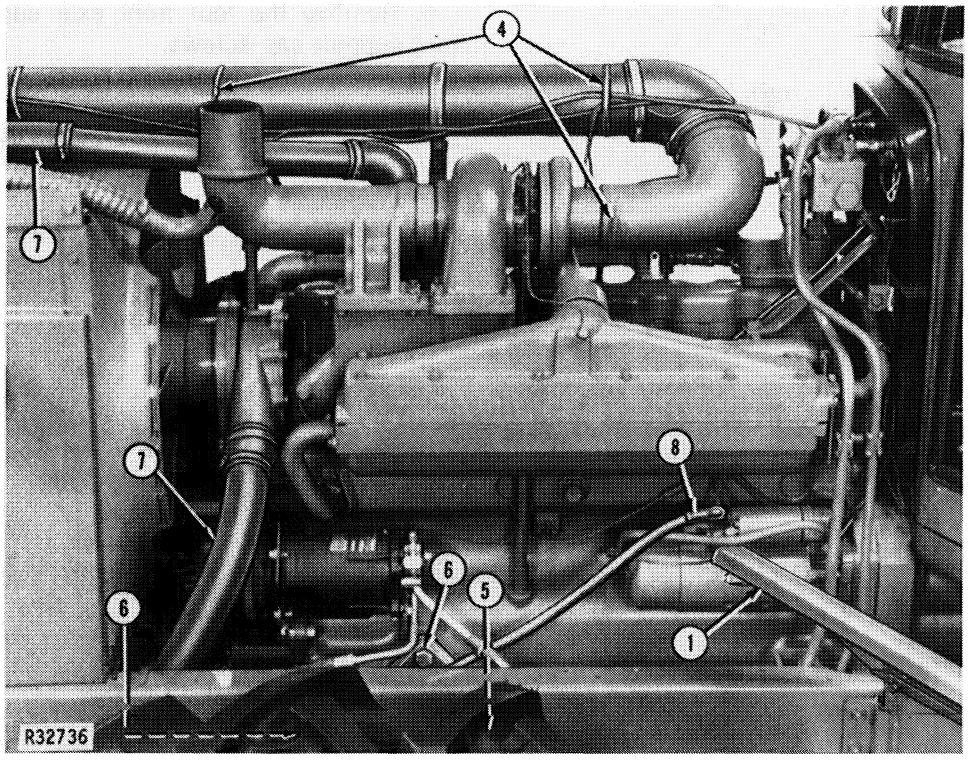

Fig. 16-Left-Hand Removal Procedures (8630)

Front End Assembly

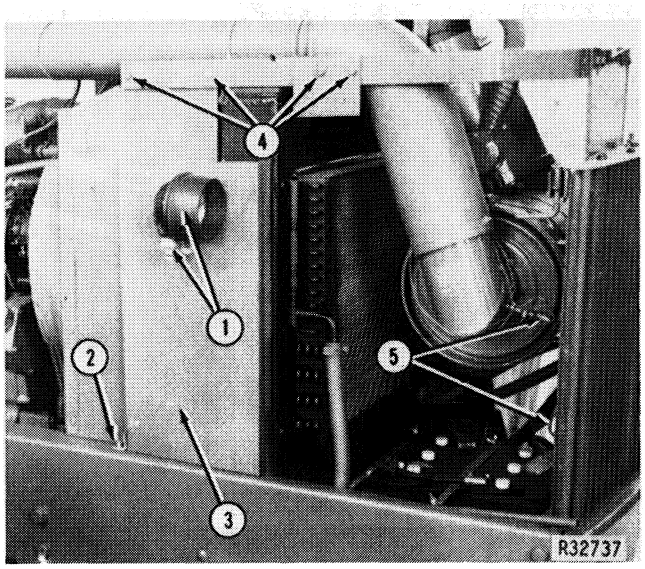

Fig. 17-Right-Hand Removal Points

IMPORTANT: Disconnect battery-to-starter cable from starter.

Refer to Figs. 17 and 18 and perform the following:

1. Disconnect wires from front flood lamps. Remove cap screw from bottom of flood lamp and remove lamp. Remove snap ring and washer from flood lamp post.

2. Remove cap screw securing side panel to side frame.

3. Remove side panels from tractor support.

4. Remove cap screws securing fan shroud tie straps. Leave one cap screw in place in front on each strap. Tilt straps upward.

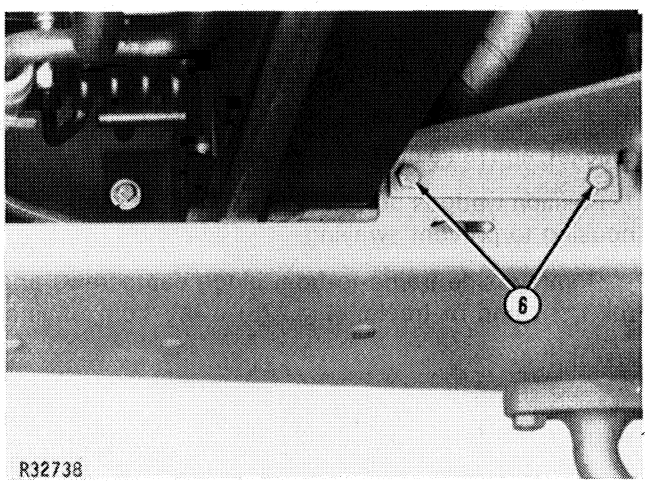

Fig. 18-Left-Hand Removal Points

5. Disconnect wiring from air restrictor indicator, horn and front head lamps and pull wiring back onto top of engine.

6. Remove the cap screws securing the fan shroud support to the side frames. Remove fan attaching cap screws and wire fan to shroud so fan cannot fall out.

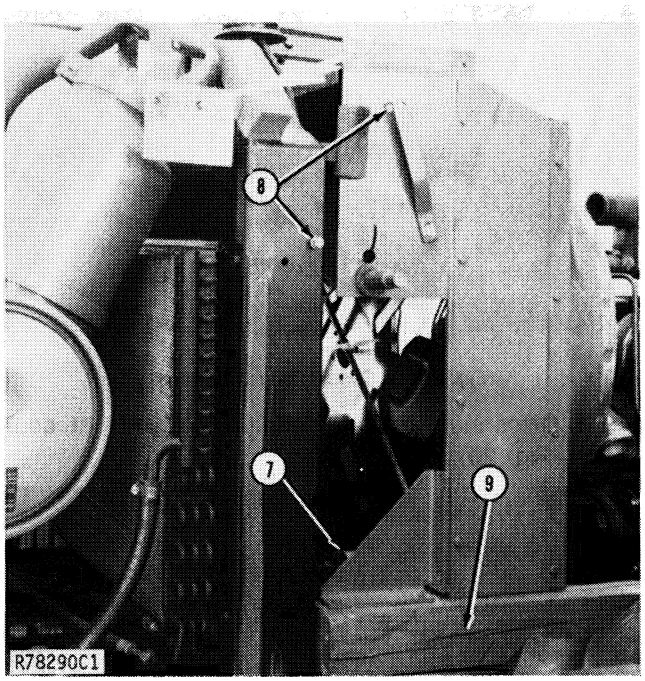

Fig. 19-Blocking Of Shroud Support

7. Remove oil cooler hose from top hydraulic pump and adjustable elbow from pump.

8. Remove cap screws at radiator from radiator tie straps. Tilt strap upward.

IMPORTANT: Wire shroud to air stack support to prevent shroud from moving during separation.

9. Place a 4 x 4 block of wood between shroud and frame on right and left sides.

Front End Assembly—Continued

(Not Illustrated) From inside the Sound-Gard, remove the floor mat and floor panel.

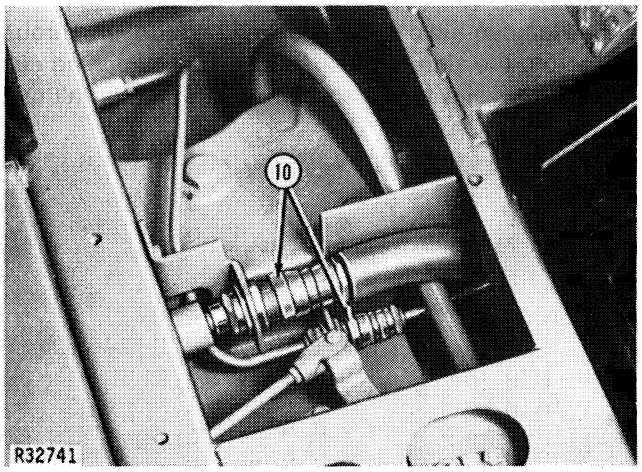

Fig. 20-Air Conditioning Couplings

10. Disconnect the air conditioning lines at couplings (Fig. 20).

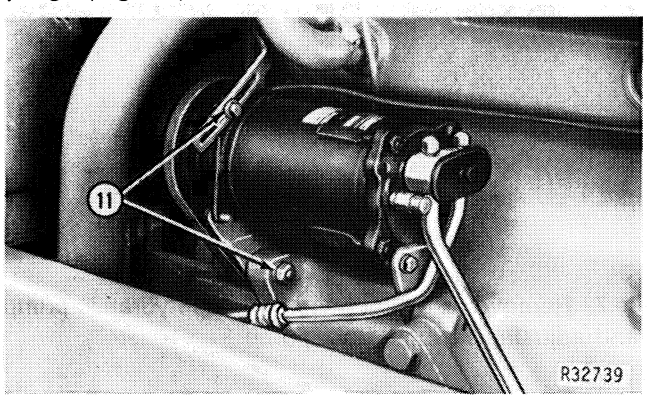

Fig. 21-Air Compressor

11. Remove cap screw and bolt at front of air conditioning compressor and rotate compressor to remove fan belt.

(Not Illustrated) Remove compressor from block without removing refrigerant lines. Secure compressor and refrigerant lines to frame and remove with frame upon separation.

Install Lifting Bracket (D-05153ST) following manufacturers' instructions. (Fig. 7).

NOTE: The Method "A" separation can also be done using the Rear Support Stand (D-05150ST).

To use this method, remove the drawbar. Bolt the first mounting pad to the drawbar mounting pad. Position second mounting pad under rear hinge.

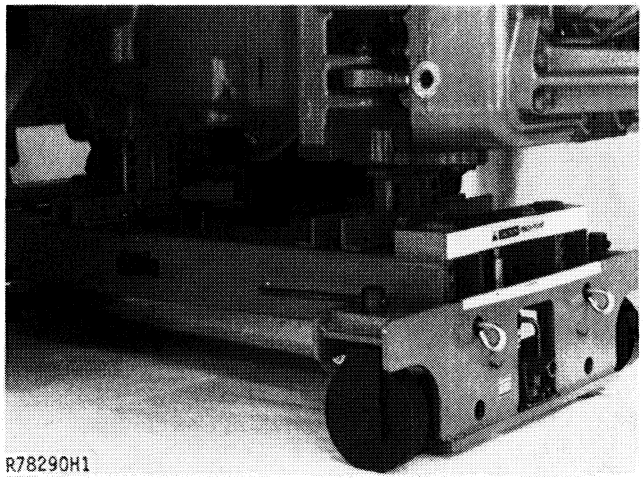

Fig. 22-Rear Support Stand Installed

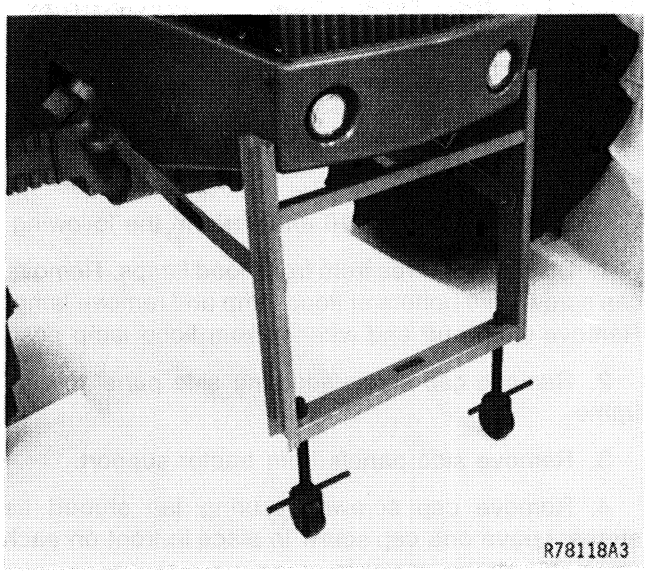

Fig. 23-Front Support Stand Installed

Install Front Support (D-5152ST) following manufacturers' instructions. (Fig. 23).

Place a 12-ton or larger floor jack under the lifting bracket, and raise until front end of tractor begins to lift.

Position wedges between side frame and front axle housing to prevent swaying.

Remove side frame-to-front hinge cap screws and roll front end of tractor (Fig. 23) away from engine.

Engine

With the front end assembly moved away from the engine, direct access to the components attached to the engine is obtained.

Use the following illustrations for reference and proceed with engine removal following the numbered sequence.

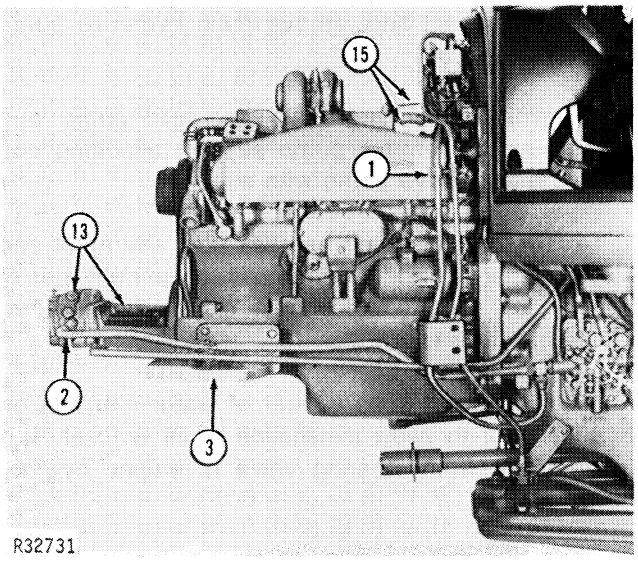

Fig. 24-Left-Hand Removal Points (8430)

1. Remove clamps holding steering lines to engine block.

2. Disconnect and remove the inlet line to the main hydraulic pump. (Line is retained by a clamp on the engine support.)

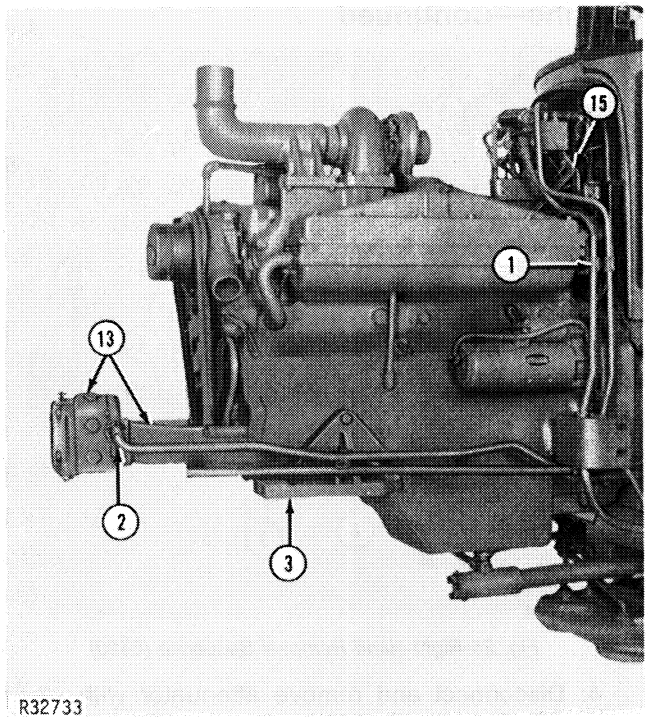

Fig. 25-Left-Hand Removal Points (8630)

3. Remove engine support-to-axle support cap screws from engine. Remove engine supports.

Engine—Continued

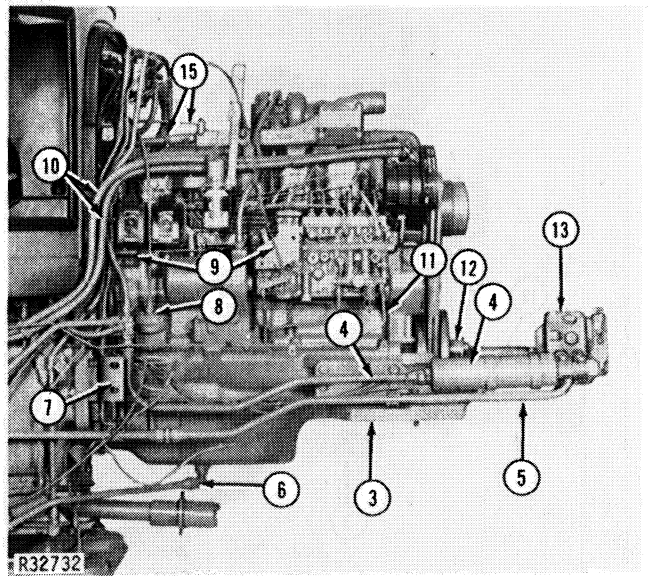

Fig. 26-Right-Hand Removal Sequence (8430)

4. Disconnect and remove attenuator with elbow and rear oil line.

5. Remove high pressure outlet line from pump and rear coupler.

6. Disconnect flange and drain engine oil from crankcase.

7. Remove engine-to-side frame bracket and vertical brace from engine.

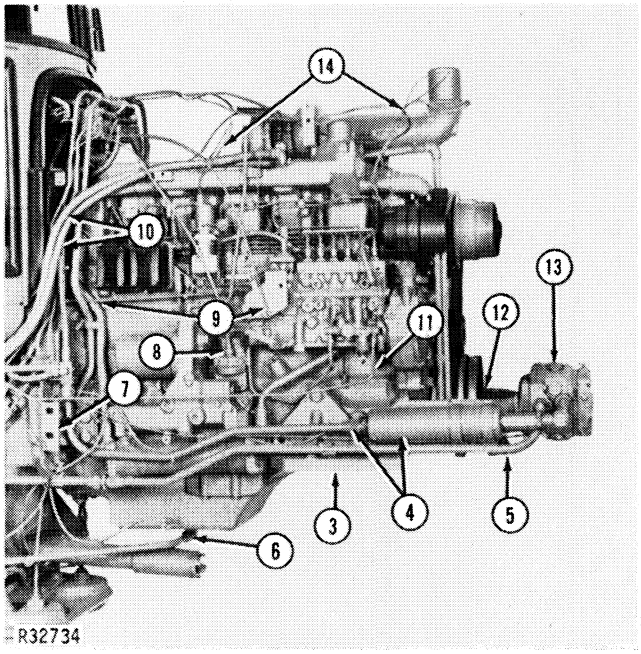

Fig. 27-Right-Hand Removal Sequence (8630)

8. Disconnect tachometer.

9. Disconnect fuel shut-off cable. Disconnect speed control rod at turnbuckle.

10. Disconnect water hoses to heater.

11. Disconnect and remove fuel inlet line, if not already done.

12. Disconnect and remove main hydraulic pump drive coupler.

13. While supporting main hydraulic pump and pump support, remove pump support attaching cap screws and remove pump with support.

14. Disconnect wiring harness from alternator and electric ether aid and pull harness to the right rear of engine. Be sure to disconnect engine temperature gauge indicator wire.

15. Disconnect hose at rear of water manifold on 8430 Tractor to allow installation of lift bracket. Remove brace from steering valve to engine cylinder head.

On the 8430 engine, attach the JDE-63 Lifting Bracket to the front and second from rear cylinder head bolts. The JDG-1-9 Lifting Brackets are installed on the 8630 engine. (Fig. 28).

Install the JDG-1 Engine Lift Sling onto Engine Lifting Brackets. Hook Sling to overhead hoist. The approximate balance point for engines is halfway between No. 3 and No. 4 cylinders. Fig. 28 illustrates the balance position.

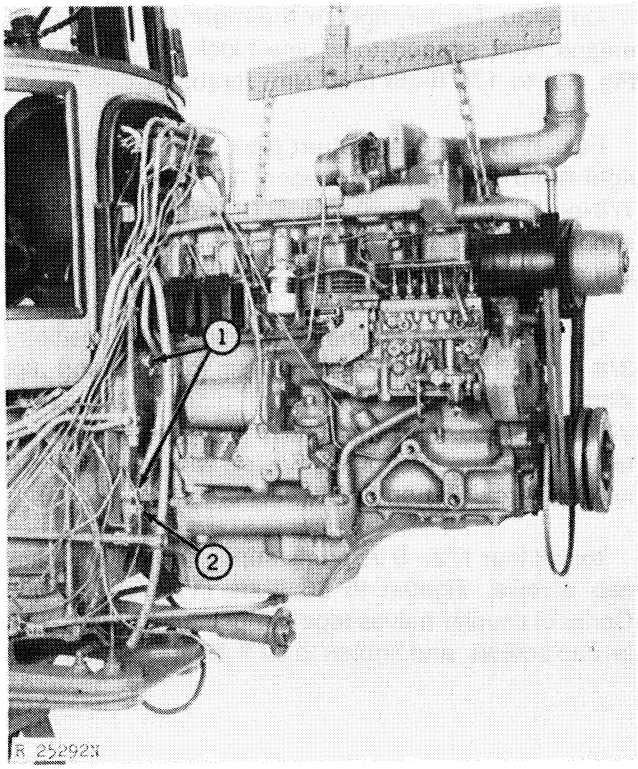

Fig. 28-Engine Sling Installed (8630 shown)

Refer to Fig. 28 and perform following steps:

1. Remove the engine flange-to-clutch housing cap screws.

2. Remove the oil pan-to-clutch housing cap screws. Carefully separate the engine from the clutch housing.

Installation

Before installing engine on clutch housing, inspect the joining surfaces to make sure they are smooth and clean. Use a scraper or similar tool to remove all traces of gasket material and rust.

Apply a light coating of grease to engine and clutch housing flanges. Position a new gasket on clutch housing dowels. Install engine on clutch housing.

On 8430 Tractor, install the six rear mounting flange-to-clutch housing cap screws (3/4 - 3 in.) and the six oil pan-to-clutch housing cap screws (1/2 - 1-3/4 in). Tighten 3/4-in. screws to 300 ft-lbs (407 Nm) torque and 1/2-in. screws to 85 ft-lbs (115 Nm) torque.

On 8630 Tractor, install the rear mounting flange-to-clutch housing cap screws (3/4 - 2-1/2 in.) and the oil pan-to-clutch housing cap screws (3/4 - 2-1/8 in.). Tighten these screws to 300 ft-lbs (407 Nm) torque. Be sure cap screws are tightened to the full specified torque, as they tie important load-carrying members together.

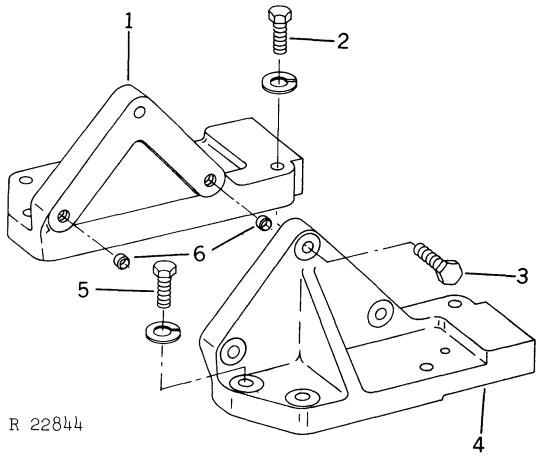

1—Left-Hand Support
2—Cap Screw with lock washer
3—Cap Screw
4—Right-Hand Support
5—Cap Screw with lock washer
6—Hollow Dowel

Fig. 29-Engine Front Supports (8630)

Make sure dowels (6, Fig. 29) are installed in engine front supports, and mount support to engine.

Reverse numbered separation sequence given on pages 25-11 and 25-12. See the following two pages for additional installation instructions.

Refer to cap screw torque value chart on page 10-6 of this section.

Installation—Continued

One 8630 Tractor, tighten the six 3/4 - 2-3/4 in. engine front support-to-engine block cap screws (3, Fig. 29) to 300 ft-lbs (407 Nm) torque.

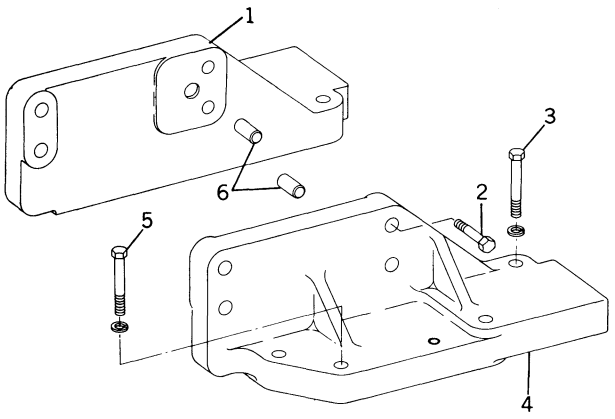

R 23605N

1—Left-Hand Support
2—Cap Screw with Lock Washer
3—Cap Screw
4—Right-Hand Support
5—Cap Screw with Lock Washer
6—Dowel Pin

Fig. 30-Engine Front Supports (8430)

On 8430 Tractor, tighten the eight 5/8 - 2-1/4 in. engine front support-to-engine block cap screws (2, Fig. 30) to 170 ft-lbs (230 Nm) torque.

Fasten the function return pipe (G, Fig. 31) to the right-hand engine front support (E). Position a 1/2 - 7/8 in. (12.7-22.23 mm) spacer (I) and pipe clamps on support. Secure with a 3/8 - 1-7/8 in. cap screw (K) using a lock washer and flat washer.

On the left-hand engine front support, (D) position a 3/8 - 1-3/8 in. (9.53-34.93 mm) spacer (S), and pipe clamps (attached to cooler return pipe), a 3/8 - 1-1/8 in. (9.53-28.58 mm) (i), spacer and pipe clamps (attached to pump inlet pipe). Secure with a 3/8 x 3-5/8 in. cap screw (H) and lock washer.

Install four 1/2 - 5 in. pump support-to-engine block cap screws. Tighten to 85 ft-lbs (115 Nm) torque. Connect coupler halves together using two 3/8 - 2-1/2 in. cap screws, and tighten to 30 ft-lbs. (41 Nm) torque.

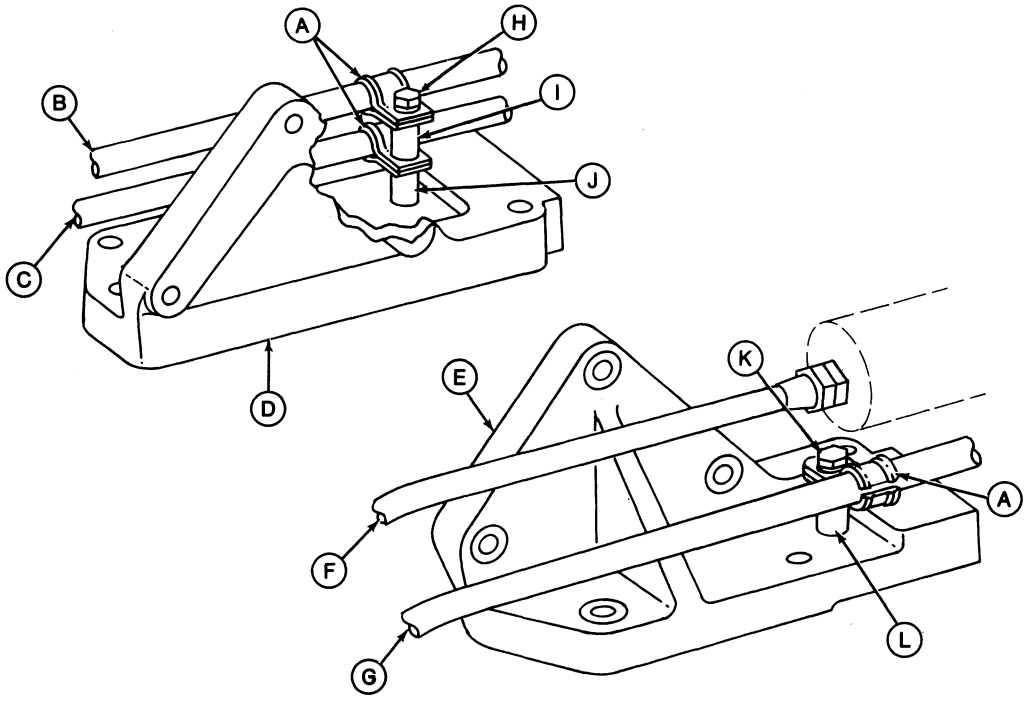

R 25293N

A—Pipe Clamps
B—Pump Inlet Pipe
C—Cooler Return Pipe
D—Left-Hand Support
E—Right-Hand Support
F—Attenuator-to-Manifold Pipe
G—Function Return Pipe
H—Cap Screw (3/8-3-5/8 inches)
I —Spacer (3/8-1-1/8 inches)
J—Spacer (3/8-1-3/8 inches)
K—Cap Screw (3/8-1-7/8 inches)
L—Spacer (1/2-7/8 inch)

Fig. 31-Hydraulic Oil Pipes Fastened to Engine Front Supports (8630 Shown - 8430 Mounting is Similar)

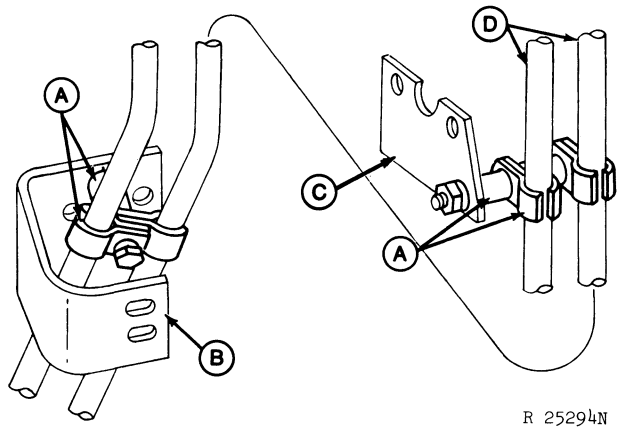

A—Spacers and Clamps
B—Engine-to-Side Frame Bracket
C—Bracket
D—Steering Pipes

Fig. 32-Left-Hand Steering Pipe Spacers and Clamps (8430 Shown - 8630 Similar Mounting)

Install clamps and spacers for left-hand steering pipes (Fig. 32). Position a 3/8 x 1-5/8 in. spacer (9.53-41.28), pipe clamps (attached to the steering valve return pipe), a 1/2 - 7/8 in. (12.7-22.23 mm) spacer, pipe clamps (attached to steering valve-to-steering cylinder pipe) on bracket. Secure pipe clamps and spacers with a 3/8 - 3-3/4 in. bolt, lock washer, and nut.

Secure both steering pipes to engine block-to-side frame bracket, using a 3/8 - 3-5/8 in. cap screw to fasten pipe clamps and 1/2 - 2-3/4 in. (12.7-69.8 mm) spacer to bracket.

Roll tractor front end back into position. Adjust alignment to allow engine front supports to position correctly with front axle support. When alignment is correct, install cap screws and tighten to 170 ft-lbs (230 Nm) torque. Two of the cap screws should be installed through the thicker part of the supports.

Adjust alternator fan belt, using belt tension gauge, to 95-104 lbs. (423-467 Nm). Adjust compressor belt, using belt tension gauge, to 130-140 lbs. (578-622 Nm). After run-in tension on all belts should be 85-94 lbs. (378-423 Nm).

Install the side frame-to-front hinge cap screws and tighten to 300 ft-lbs (407 Nm) torque.

Refer back to separation procedure and illustrations on pages 25-7 through 25-10. Reverse removal procedures. Refer to Fig. 33 and check correct wiring connections.

Remove the engine lift sling and lifting brackets. Remove wedges from front axle.

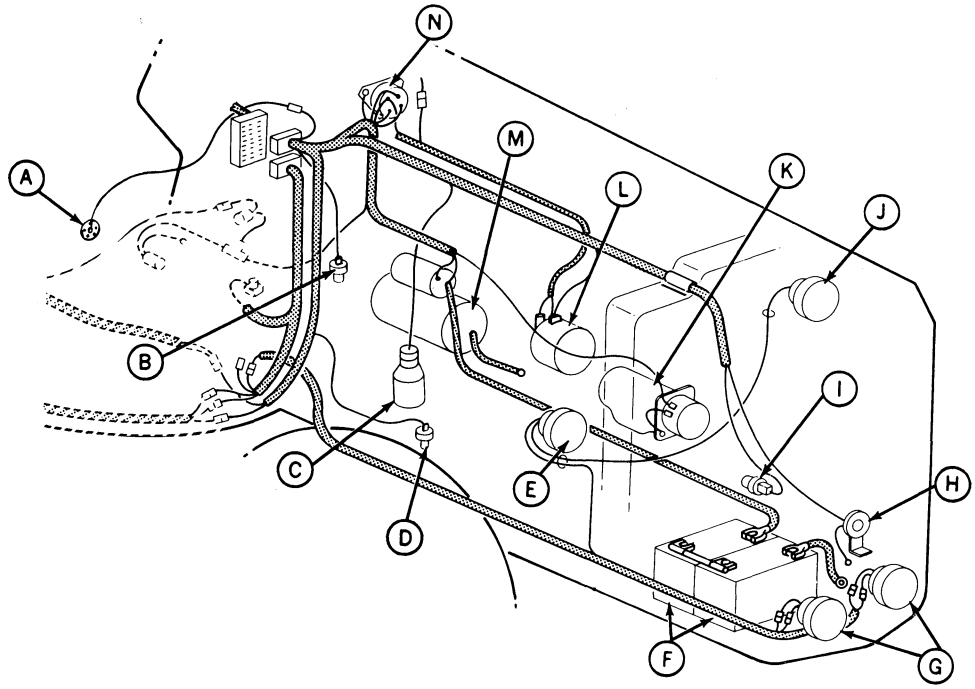

A—Fuel Gauge Sender
B—Engine Temperature Sender
C—Electric Ether Aid
D—Oil Pressure Sender
E—Right-Hand Flood Lamp
F—Batteries
G—Headlamps
H—Horn
I —Air Restrictor Indicator Sender
J—Left-Hand Flood Lamp
K—Compressor
L—Alternator
M—Starter
N—Starter Circuit Relay

Fig. 33-Wiring Connections

Installation—Continued

Connect drive shaft to front axle. (See page 25-2.) Remove support stand from under front hinge.

Install crankcase oil drain pipe. Fill crankcase with the correct grade and viscosity of engine oil. Refer to Operator's Manual.

Fill the cooling system and connect battery ground cable. Start engine and check for leaks. Install hood, grille screens, air stack, and muffler. Be sure to connect aspirator hose to muffler.

METHOD "B" SEPARATION

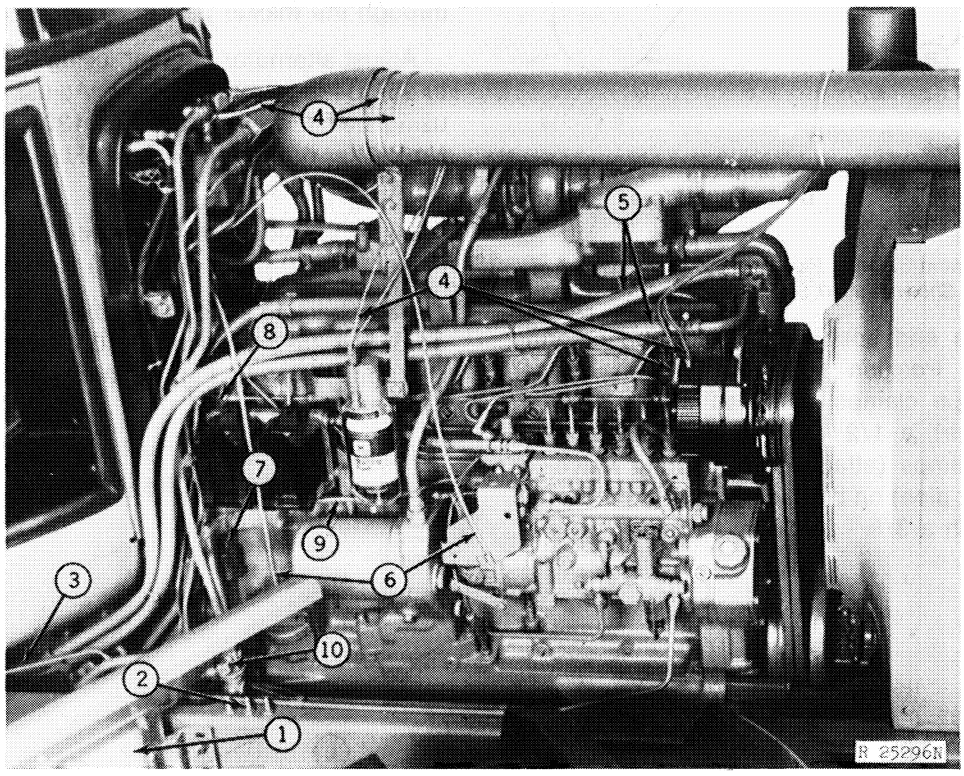

Fig. 34-Right-Hand Separation Steps (8430)

Removal

Discharge the accumulator. (See CAUTION at bottom of left-hand column, page 25-6.)

Remove muffler, air stack, grille screens, and hood. Disconnect the battery ground cable, and drain the cooling system.

Disconnect the drive shaft from front axle. (See page 25-2, referring to Figs. 2 and 3.)

Drain the engine crankcase oil, and disconnect the drain pipe at the oil pan. Remove the drain pipe.

Refer to Fig. 34 for 8430 Tractor and Fig. 35 for 8630 Tractor, and perform the following removal steps:

1. Remove both fuel tanks as instructed in Section 30, Group 15.

2. Disconnect grease fittings from side frame. To remove, loosen the lock nut on top while holding body with a wrench from underneath.

3. Disconnect front headlamp wiring at connector under right-hand front corner of Sound-Gard Body.

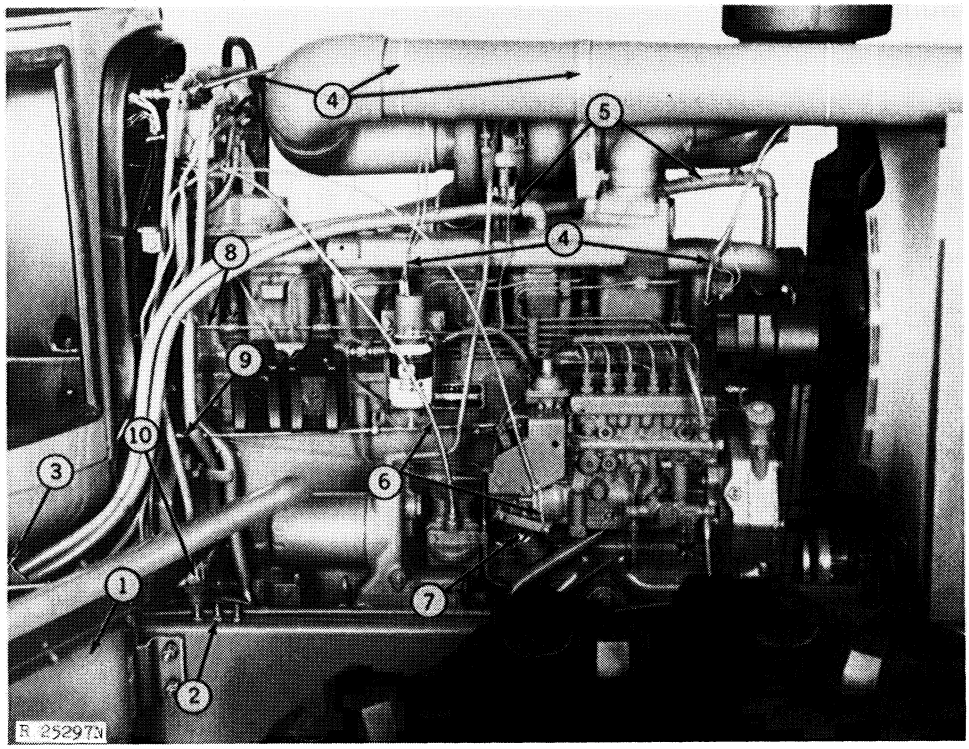

Fig. 35-Right-Hand Separation Steps (8630)

4. Disconnect wiring from restriction indicator switch, horn, alternator, and ether starting aid. Remove wiring harness retaining bands from air intake pipe. Remove air cleaner-to- turbocharger air intake pipe and hose assembly.

5. Disconnect both heater hoses from engine.

6. Disconnect tachometer drive cable and fuel shut-off cable.

7. Disconnect engine oil pressure sender wire.

8. Disconnect leak-off pipe from No. 6 nozzle nylon boot.

9. Disconnect the speed control rod at turnbuckle.

10. Disconnect the pressure manifold bracket from engine-to-side frame bracket.

Using Figs. 36 and 37, perform the following on left side of engine:

11. Disconnect engine coolant temperature sender wire.

12. Disconnect the air conditioning lines at couplers under Sound-Gard Body floor plate. See Section 80, Group 5 for instructions. Disconnect wiring lead at the compressor clutch.

13. Disconnect the Sound-Gard Body ground wire from starter frame.

14. Disconnect the steering pipe clamps from engine-to-side frame bracket, and at rear of intake manifold or intercooler.

15. Disconnect the wiring harness from starter solenoid and remove brace (steering valve support-to-water manifold). Disconnect hose at end of water manifold on 8430.

In addition to the numbered removal steps just given, the following hydraulic pipes and lines must be disconnected:

(a) Disconnect the attenuator-to-pressure manifold pipe at the manifold end.

(b) Disconnect the pump inlet pipe (function return) pipe at connector below rear portion of engine oil filter.

(c) Disconnect front differential vent line at Hi-Lo bearing quill.

Removal-Continued

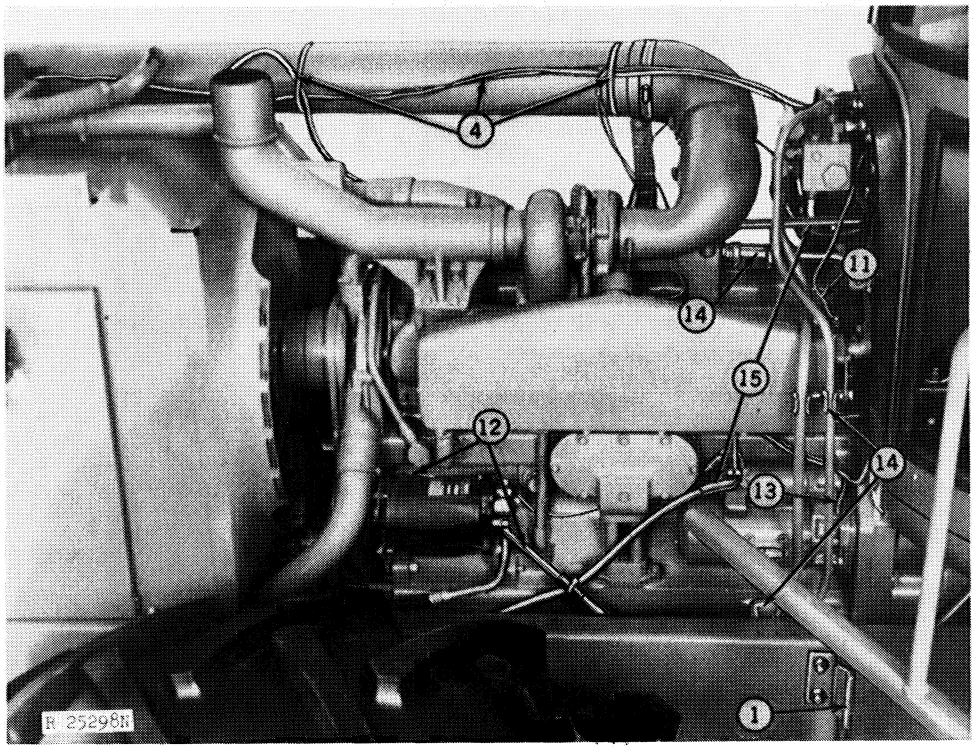

Fig. 36-Left-Hand Separation Steps (8430)

(d) Disconnect the main hydraulic pump seal bleed line at pump.

(e) Disconnect the hydraulic oil cooler return pipe at top of clutch housing.

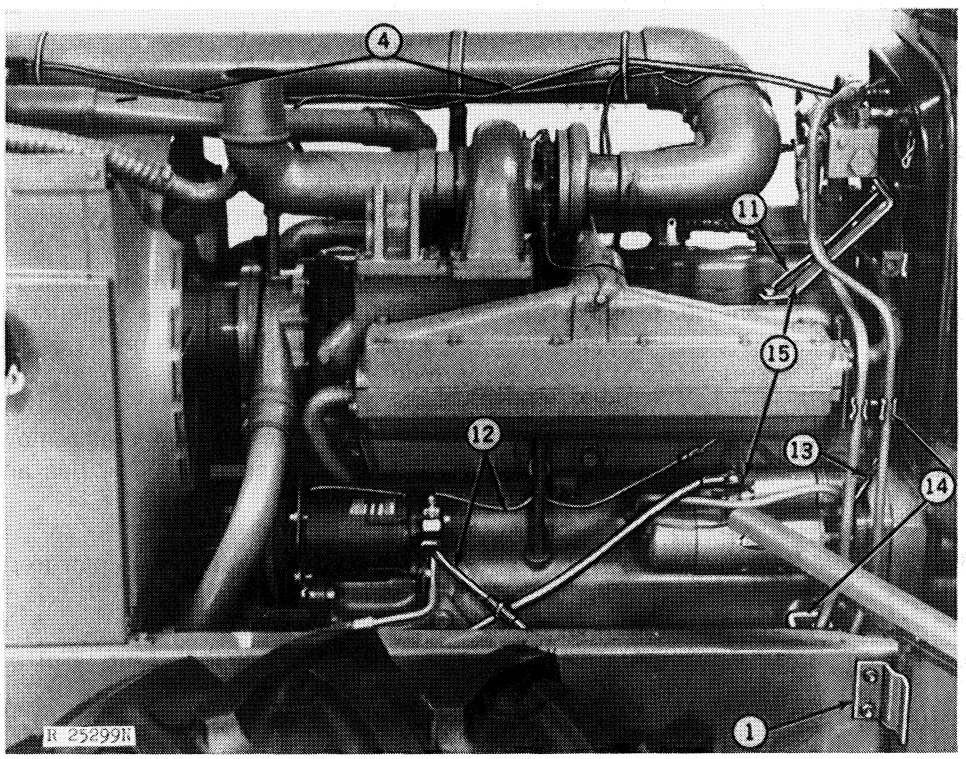

Fig. 37-Left-Hand Separation Steps (8630)

Install a wedge or block between the front drive housing and the engine side frame. A wedge should be used on both sides to prevent rocking of front end.

Attach Front Support (D-05152ST) to the front end assembly, and block the front wheels to prevent movement during engine removal.

⚠ CAUTION: Front end will tip down on its nose if not supported from a point forward of the front axle when engine is removed.

Install Rear Support Stand (D-05150ST). See page 25-10 for installation instructions.

Remove left and right engine-to-side frame brackets. Remove the two engine-to-clutch housing cap screws behind the brackets. Replace the brackets. This eliminates the need for an overhead support for the engine.

Install Front Support Stand (D-05151ST) following manufactureres' instructions.

Remove the engine-to-clutch housing cap screws and remove the oil pan-to-clutch housing cap screws.

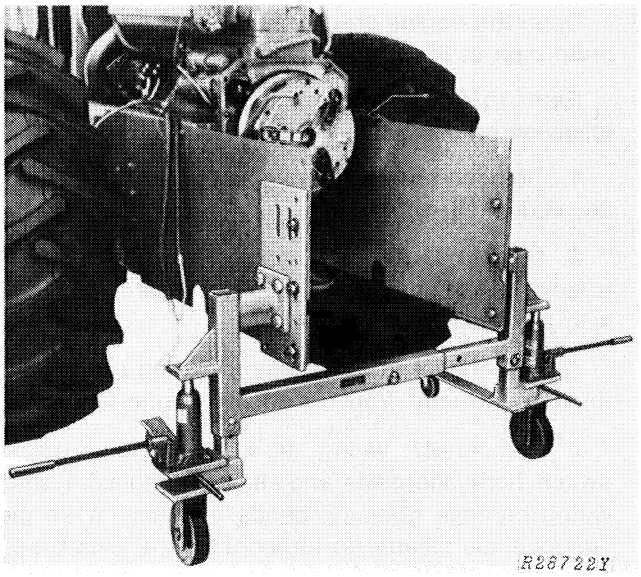

Fig. 38-Engine and Tractor Front End Separated From Clutch Housing

Carefully roll front end and engine out from clutch housing (Fig. 38).

The engine may be removed by doing the following:

On 8430 Tractor, install the JDE-63 Lifting Brackets on engine. On 8630 Tractor, install JDG-1-9 Lifting Brackets. Connect JDG-1 Engine Lift Sling to brackets and to an overhead hoist. The approximate balance point of the engine front-to-rear is between No. 3 and No. 4 cylinders.

1. Disconnect and remove the upper and lower radiator hoses (7, Fig. 16).

2. Remove the air conditioning compressor from engine and fasten to side frame, in a position that will not interfere with the engine when the engine is removed.

3. Disconnect the hydraulic pump drive coupling and pump support bracket from engine (13, Fig. 27). Disconnect and remove the fuel pump inlet pipe (3, Fig. 15).

4. Disconnect the hydraulic oil pipes from engine front supports.

Remove left and right engine-to-side frame brackets.

Remove engine front support-to-axle support and engine cap screws. Remove engine from side frames.

Installation

If the engine was removed from the front end, install engine on clutch housing, and then install tractor front end. See pages 25-9 through 25-15 of this group for instructions.

If the engine was NOT removed from the tractor front end, install the engine and front end using the following procedure:

Before installing engine on clutch housing, inspect the joining surfaces to make sure they are smooth and clean. Use a scraper or similar tool to remove all traces of gasket material and rust.

Installation—Continued

Apply a light coating of grease to engine and clutch housing flanges. Position a new gasket on clutch housing dowels.

Roll tractor front end with engine back into position. Install the six flywheel housing-to-clutch housing cap screws (3/4-2-1/2 in. on 8630 Tractor; 3/4-3 in. on 8430 Tractor) and the six oil pan-to-clutch housing cap screws (3/4-2-1/8 in. on 8630 Tractor; 1/2-1-3/4 in. on 8430 Tractor). Tighten 3/4-in. cap screws to 300 ft-lbs torque and the 1/2-in. cap screws to 85 ft-lbs (115 Nm) torque. Use the JDG-16 Socket Extension on 8430 Tractor as some cap screws are installed from the rear and cannot be tightened without the extension. Be sure cap screws are tightened to proper torque, as they tie important load-carrying members together.

Install the eight 3/4 - 2.07 in. side frame-to-front hinge special hex bolts. Tighten to 300 ft-lbs (407 Nm) torque.

Reverse the numbered separation steps given previously on pages 25-16, 25-17, and 25-18. When making wiring connections, refer to Fig. 33, and when making hydraulic pipe and line connections, refer to Figs. 24 and 26 for 8430 Tractor and Figs. 25 and 27 for 8630 Tractor.

Remove the engine lift sling and lifting brackets. Remove wedges from front drive assembly.

Connect drive shaft to front axle. See page 25-2. Remove lifting bar from under front hinge.

Install crankcase oil drain pipe. Fill crankcase with the correct grade and viscosity of engine oil. Refer to Operator's Manual.

Fill the cooling system and connect battery ground cable. Start engine and check for leaks. Install hood, grille screens, air stack, and muffler. Be sure to connect aspirator hose to muffler.

CLUTCH HOUSING

GENERAL INFORMATION

The clutch housing will seldom require removal from the tractor. However, if removal is necessary because of leakage at gasket between clutch housing and front hinge, physical damage to housing, or for some other reason, it may be done without removing the Sound-Gard Body.

The most acceptable way of removing the clutch housing is to remove the engine and tractor front end (Method "B" engine separation, page 25-16) with the clutch housing attached to the engine. In so doing, the weight of the clutch housing is partially offset by the weight of the tractor front end, providing a satisfactory balance of assemblies.

REMOVAL

NOTE: Before starting to remove parts, the tractor should be turned to the right far enough to provide room to work in the left-hand side of hinge area. The drive shaft universal joints must be disconnected and the bearing quills removed. See CAUTION in left-hand column, page 25-2.

Discharge the accumulator. See CAUTION in right-hand column, page 25-6.

Remove muffler, air stack, grille screens, and hood. Disconnect the battery ground cable, and drain the cooling system.

Drain the engine crankcase oil, and disconnect the drain pipe at the oil pan. Remove the drain pipe.

Refer to Fig. 13 or 15 and 14 or 16, using the following procedure:

1. Remove both fuel tanks as instructed in Section 30, Group 15.

2. Disconnect grease fittings from side frame. To remove, loosen the lock nut on top while holding body with a wrench from underneath.

3. Disconnect front headlamp wiring at connector under right-hand front corner of Sound-Gard Body.

4. Disconnect wiring from restriction indicator switch, horn, alternator, and ether starting aid. Remove wiring harness retaining bands from air intake pipe. Remove air cleaner-to-turbocharger air intake pipe and hose assembly.

5. Disconnect both heater hoses from engine.

6. Disconnect tachometer drive cable and fuel shut-off cable.

7. Disconnect engine oil pressure sender wire.

9. Disconnect leak-off pipe from No. 6 nozzle nylon boot.

9. Disconnect the speed control rod at turnbuckle.

10. Disconnect pipes and hose from pressure manifold.

11. Disconnect engine coolant temperature sender wire.

12. Disconnect the air conditioning lines at couplers under Sound-Gard Body floor plate. See Section 80, Group 5 for instructions. Disconnect wiring lead at the compressor clutch.

13. Disconnect the Sound-Gard Body ground wire from starter frame.

14. Disconnect the steering pipe clamps from engine-to-side frame bracket, and at rear of intake manifold. Remove left-hand steering pipes.

15. Disconnect the wiring harness from starter solenoid, and remove brace (steering valve support-to-cylinder head).

In addition to the numbered removal steps just given, the following hydraulic pipes and lines must be disconnected:

(a) Disconnect the pump inlet pipe (function return) pipe at connector below rear portion of engine oil cooler.

(b) Disconnect the main hydraulic pump seal bleed line at pump.

(c) Disconnect the hydraulic oil cooler return pipe at top of clutch housing.

(d) Disconnect front differential vent line at Hi-Lo bearing quill.

On 8430 Tractor, install JDE-63 Engine Lifting Brackets on engine. On 8630 Tractor install JDG-1-9 Engine Lifting Brackets. Connect JDG-1 Engine Lift Sling to brackets and to an overhead hoist (Fig. 14).

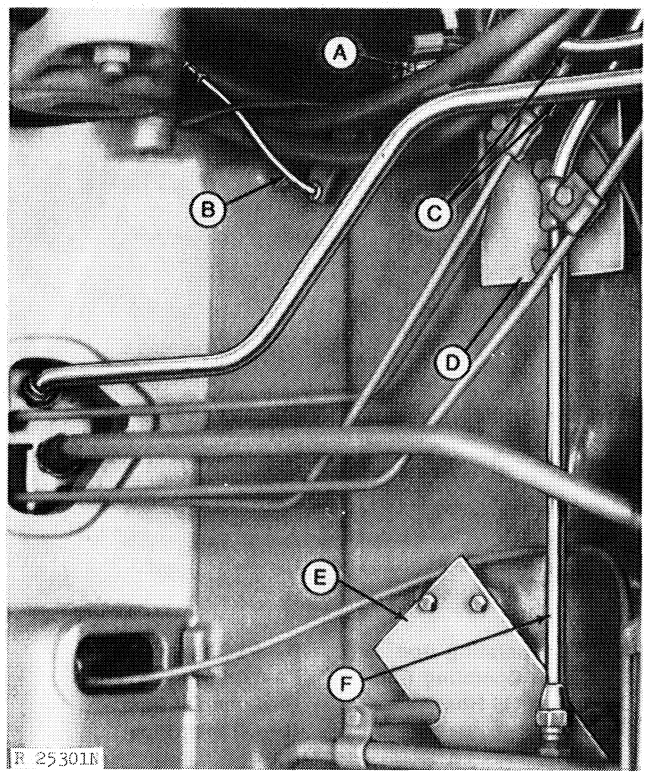

A—Brake Return Hose
B—Two-Speed Control Rod
C—Rockshaft Pipe and Brake Hose
D—Upper Bracket
E—Lower Bracket
F—Steering Pipe

Fig. 39-Right-Hand Side of Clutch Housing

Disconnect the steering and rockshaft hydraulic oil pipes from pressure manifold. Disconnect brake return hose (A, Fig. 39) from top of clutch housing.

Disconnect steering pipe (F) at lower bracket (E) connector, and then remove the lower bracket from clutch housing.

Disconnect the upper bracket (D) from clutch housing.

Disconnect the control rod (B) from planetary linkage arm at top of clutch housing.

REMOVAL—Continued

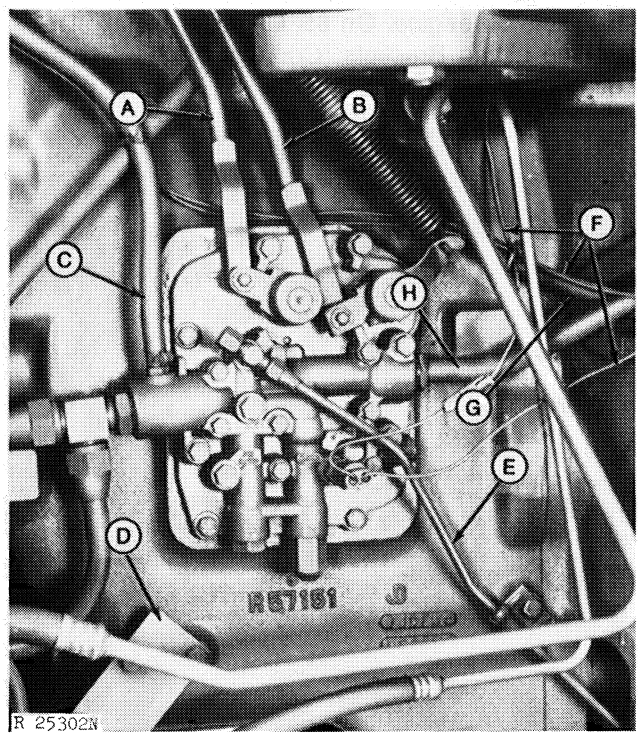

A—PTO Operating Rod
B—Clutch Operating Rod
C—Return Oil Hose
D—Bracket
E—PTO Brake Line
F—Wiring
G—Lube Oil Pipe
H—Oil Inlet Pipe

Fig. 40-Left Side of Clutch Housing (Early Model)

Disconnect the PTO (A, Fig. 40) and clutch control rods (B) from pressure regulating valve housing.

Disconnect wiring (F).

Disconnect hydraulic oil pipes (E, G, and A) and return hose (C).

Disconnect bracket (D) from clutch housing.

Referring to Fig. 41:

1. Disconnect the PTO brake pipe.

2. Remove the universal joint drive shaft guard.

3. Disconnect pipes, hoses, and wiring from clutch oil pump filter housing. Remove filter element and cover. Remove the oil filter housing. Then pull out the clutch oil pump housing, cover, and transfer pump housing assembly.

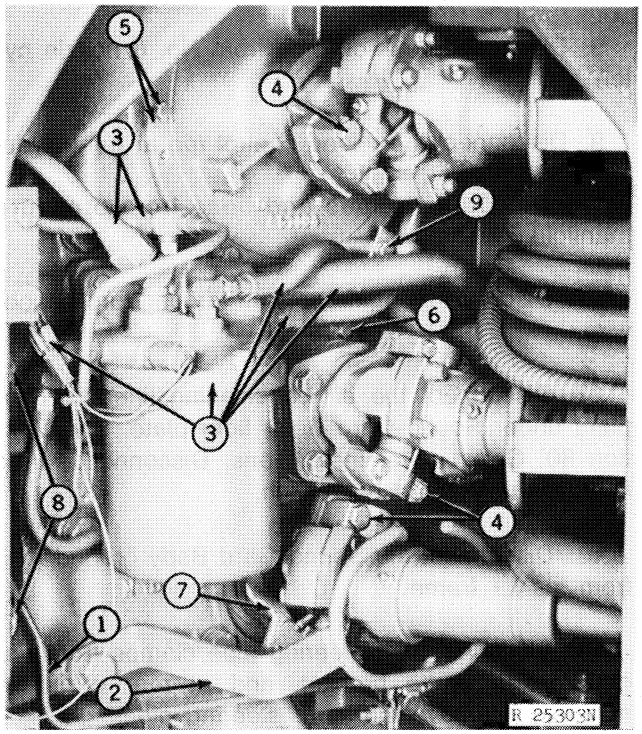

Fig. 41-Hinge Area Removal Steps

4. Disconnect each of the three drive shafts at the front universal joint.

5. Remove the cap screws from clutch output shaft bearing quill. Use two of these screws installed in threaded holes to act as jack screws. Turn jack screws in evenly until quill is free of O-ring resistance in housing, and then remove.

6. Remove PTO clutch shaft quill.

7. Remove cotter pin from front axle drive shaft castellated nut. Install JDT-27 Yoke Holding Tool, and remove nut. (See Section 50, Group 20.)

Install Front Support Stand (D-05151ST) and Rear Support Stand (D-05150ST). See page 25-10 for installation instructions.

Install a wedge or block between the front drive housing and the engine side frame (B, Fig. 38). A wedge should be used on both sides to prevent rocking of front end.

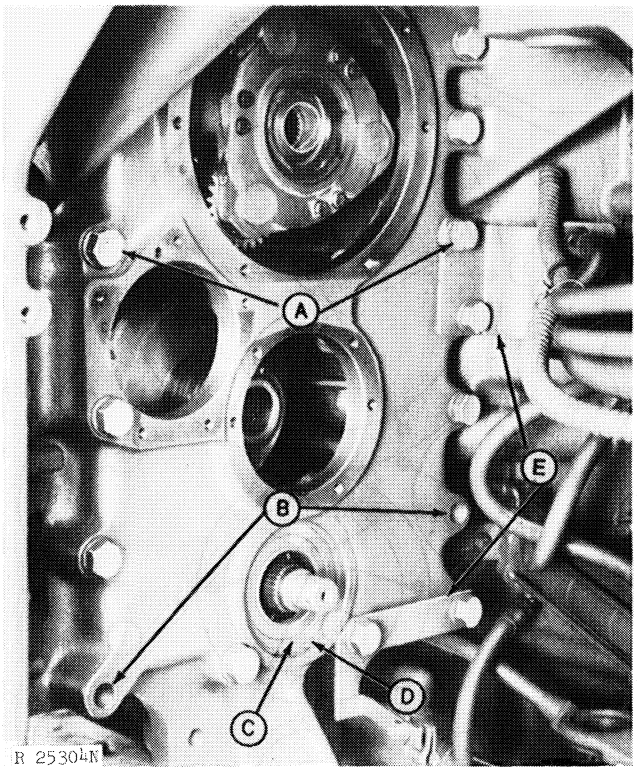

A—Cap Screws
B—Drive Shaft Guard Holes
C—Bearing Quill
D—Snap Ring
E—Hydraulic Pipe Brackets

Fig. 42-Clutch Housing-To-Front Hinge Cap Screws

Remove the clutch housing-to-front hinge cap screws (A, Fig. 42).

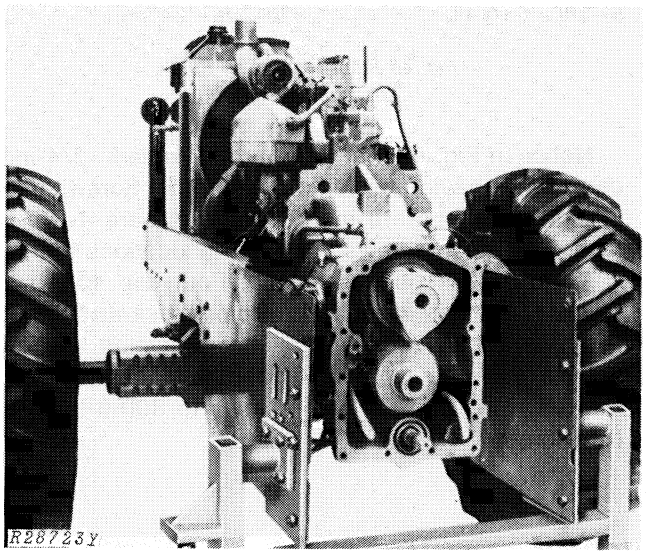

Fig. 43-Clutch Housing Separated From Hinge (8630 Illustrated)

Carefully separate the clutch housing from the front hinge, rolling assembly forward to clear the hinge. See Fig. 43.

Remove the PTO clutch from the clutch housing by pulling clutch straight out.

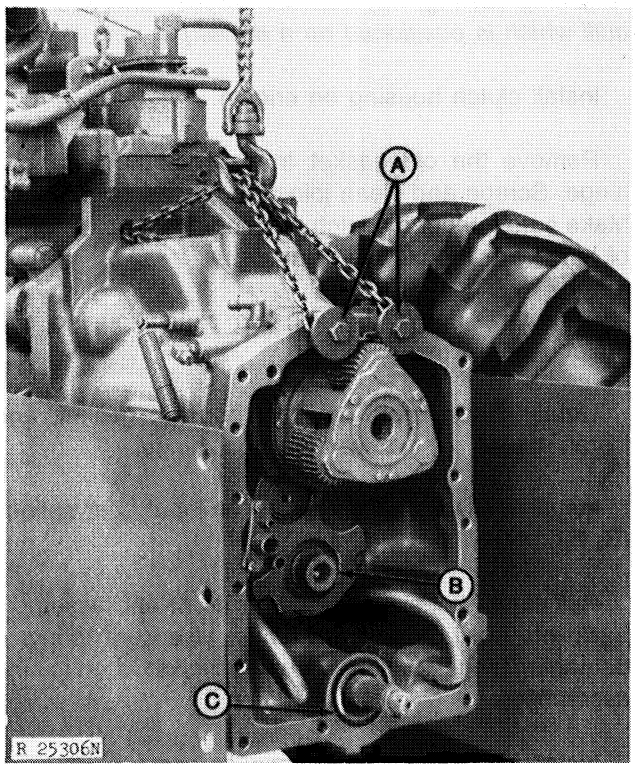

A—O-Ring
B—PTO Clutch Input Gear
C—Cap Screws and Washer For Chain

Fig. 44-Removing Clutch Housing From Engine (Front Support Stand not shown)

Attach a heavy chain to the clutch housing (Fig. 44) for removing the clutch housing. Be sure to keep the engine and tractor front end supported by the engine lift sling, and use additional supports under front frame and side frames.

Remove the engine-to-clutch housing cap screws and remove the oil pan-to-clutch housing cap screws.

Clutch housing can now be removed from the engine. Refer to Section 50 of this manual for service of component parts contained in the clutch housing.

INSTALLATION

NOTE: It is advisable to remove the drive shaft bearing quill from front hinge before installation of the clutch housing. The front drive shaft has a close fit with the bearing, so that with the bearing quill removed, installation is easier. To remove bearing quill, remove snap ring (D, Fig. 42) from its groove, and push out quill which is positioned on a dowel pin in quill bore.

Install clutch housing on engine.

Remove the old gasket from clutch housing and hinge. Scrape and clean joining surfaces as required. Make sure interior of clutch housing and adjoining part of hinge are thoroughly clean.

Remove O-ring (C, Fig. 44) from clutch housing, and replace with a new one.

Lightly grease both sides of housing gasket, and install gasket over dowels on front hinge.

Install PTO clutch (D, Fig. 43) on input gear splines (B, Fig. 44).

Roll clutch housing and tractor front end assembly back into position on front hinge. Use care to avoid damaging hinge-to-clutch housing gasket when joining assemblies.

Install all hinge-to-clutch housing cap screws (3/4-in.) and washers except the two cap screws which fasten the front drive shaft guard to the hinge (Fig. 41). These two screws should not be installed until after the universal drive shaft has been installed (see next page).

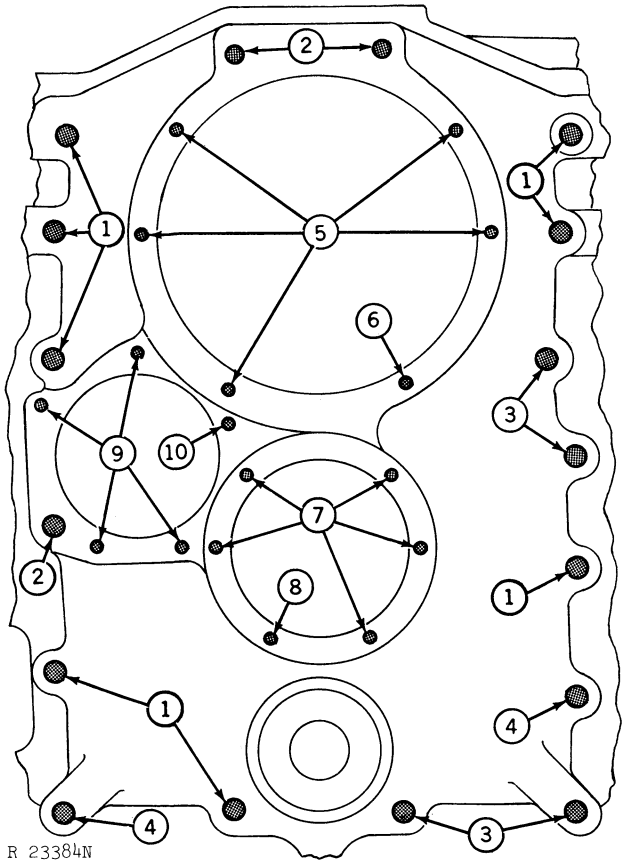

1—3/4 - 4-3/4 in.
2—3/4 - 5-1/4 in.
3—3/4 - 5-1/4 in.
4—3/4 - 5-1/4 in.
5—3/8 - 1-1/4 in.
6—3/8 - 2-1/2 in.
7—3/8 - 1-1/4 in.
8—3/8 - 1-1/2 in.
9—3/8 - 1-3/4 in.
10—3/8 - 2-3/4 in.

Fig. 45-Front Hinge Cap Screw Location Reference

Notice in Fig. 45 that there are seventeen 3/4-inch cap screws having two different lengths. Screws used in eight locations are marked "1", and are 4-3/4-in. long. Three cap screws are used in locations marked "2" and are 5-1/4 inches long. Four cap screws at location "3" (fasten hydraulic oil pipe brackets to hinge, Fig. 33) are 5-1/4-in. long. The remaining two cap screws fasten the drive shaft guard to hinge at "4", and are 5-1/4-in. long. Tighten screws to 300 ft-lbs (407 Nm) torque.

Remove the large O-ring (C, Fig. 44) from outside of clutch output shaft bearing quill, and replace with a new one. Lightly lubricate O-ring and install bearing quill in hinge.

Install five 3/8 - 1-1/4-in. cap screws with lock washers at location "5" (Fig. 45). Tighten screws to 35 ft-lbs. (47 Nm) torque. At location "6", position a 3/8 - 1-5/16-in. (9.53 - 33.34 mm) spacer, pipe clamps, and install 3/8 - 2-1/2-in. cap screw with lock washer (9, Fig. 32). Leave cap screw loose until front pipe (clutch housing oil return pipe) has been installed, instructed in middle of next column. Then tighten cap screw to the same torque given for the other five screws.

Remove O-ring from PTO clutch output shaft bearing quill. Lightly lubricate a new O-ring, and position on quill. Refer to Section 50, Group 15 for detailed service information.

Install quill on hinge, and secure with five 3/8 - 1-1/4-in. cap screws and lockwashers at location "7". Use a 3/8 - 1-1/2-in. cap screw and lock washer at "8". Tighten cap screws to 35 ft-lbs (47 Nm) torque.

Install clutch oil transfer pump housing, cover, clutch oil pump housing, and oil filter housing on front hinge using new gasket and O-rings. See Section 70, Groups 10 and 15 for detailed service information. Use four 3/8 - 1-3/4-in. cap screws at location "9". At location "10", use a 3/8 - 2-3/4-in. cap screw and lock washer. Tighten screws to 35 ft-lbs (47 Nm) torque.

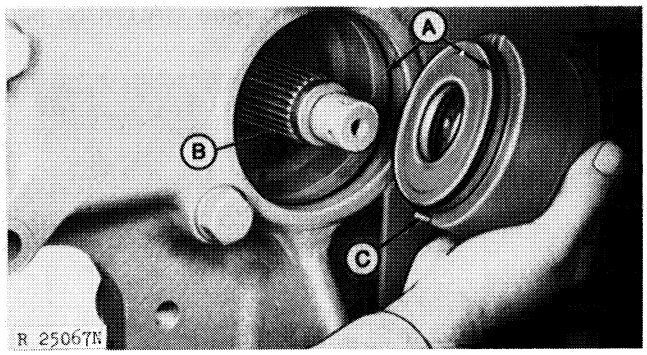

A—O-Rings
B—Drive Shaft
C—Dowel Pin

Fig. 46-Installing Front Axle Drive Shaft Bearing Quill

Install front axle drive shaft bearing quill (Fig. 46). Be sure O-ring (A) is installed in the quill bore and in the quill groove. Also, be sure dowel pin (C) is in position in hole.

Lubricate bearing quill and install in front hinge. Install snap ring (D, Fig. 42) in groove in front hinge to retain bearing quill.

Install U-joint yoke of drive shaft with groove in yoke flange indexed between the drilled holes for the cotter pin.

IMPORTANT: Do not interchange yokes. Refer to instructions given under IMPORTANT at bottom of right-hand column on page 25-34.

Use the thickest yoke retaining washer that will still permit installation of cotter pin. Install nut, using JDT-27 Yoke Holding Tool, and tighten to 450 ft-lbs (610 Nm) torque. Insert cotter pin, bending ears toward washer.

NOTE: If torque wrench can not be set to specified torque, use JDST-38 Torque Multiplier and set torque wrench accordingly. JDST-38 has a 4-to-1 ratio.

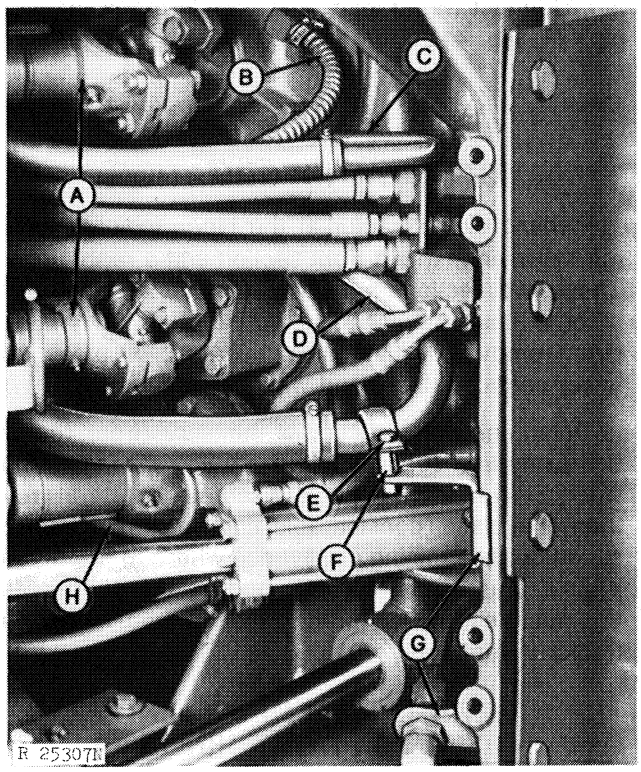

A—U-Joints
B—Vent Hose
C—Return Oil Pipe
D—Filter Inlet Pipe
E—Cap Screw (3/8" - 7/8 in.)
F—Spacer (3/8" - 7/8 in.)
G—Brackets
H—Guard

Fig. 47-Pipe and Hose Installation

Connect universal joint drive shafts (A, Fig. 47) to yokes, and tighten cap screws to 85 ft-lbs (115 Nm) torque.

INSTALLATION—Continued

Install front axle drive shaft guard (H, Fig. 47) on front hinge using special washers (between guard and hinge, and between guard and head of cap screw) on both sides. Fasten guard to hinge using 3/4 - 5-1/4-in. cap screws. Tighten screws to 300 ft-lbs (407 Nm) torque.

Insert oil return pipe (C) in oil filter housing, and position in pipe clamps (9, Fig. 40). Tighten cap screw to 35 ft-lbs (47 Nm) torque.

Insert clutch oil pump inlet pipe (large rear pipe) in oil filter housing. Fasten the outer end to bracket (G, Fig. 47) using a 3/8 - 7/8 in. (9.53 - 22.22 mm) spacer and a 3/8 - 1-7/8 in. screw.

Connect remaining pipes and hose to oil filter housing. Connect wiring lead. Install PTO brake pressure pipe (1, Fig. 41).

Remove the engine lift sling and lifting brackets.

Reverse the removal instructions given on pages 25-21 through 25-23 to complete the basic installation.

Remove wedges from front drive assembly.

Connect drive shaft to front axle. See page 25-2. Remove Rear Support Stand.

Connect crankcase oil drain pipe. Fill crankcase with the correct grade and viscosity of engine oil. Refer to Operator's Manual.

Fill the cooling system and connect battery ground cable. Start engine and check for leaks. Install hood, grille screens, air stack, and muffler. Be sure to connect aspirator hose to muffler.

HINGE

GENERAL INFORMATION

Pivoting of the tractor at the hinge logically separates the hinge into a front section and a rear section. These two sections may be disconnected from each other without removing the Sound-Gard Body. However, removal of pivot pins, hydraulic oil pipes and hose, control cables, and wiring is required.

Determine which section of the hinge (front, rear, or both) requires service before starting the separation work. Since it is possible to disconnect parts at more than one place, considerable time and effort can be saved by determining in advance where to disconnect parts and assemblies. The Sound-Gard Body (Section 80) must be removed if removal of the front hinge from tractor is required.

SEPARATING REAR HINGE FROM FRONT HINGE

Removal

Place tractor in sharp right-hand turn to make working in hinge area easier. Disconnect the battery ground cable to prevent someone from accidentally starting engine while working in hinge.

⚠ CAUTION: Before disconnecting any of the drive shafts, jack up one of the wheels to relieve any torque buildup in the power train. Personal injury could result if drive shaft "unwinds" while it is being disconnected.

Discharge the accumulator. (See CAUTION, page 25-6.)

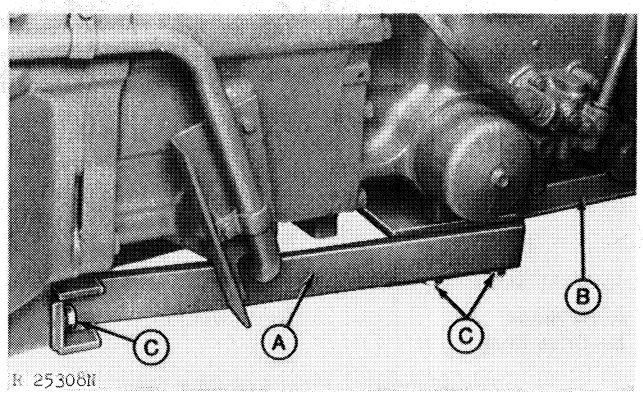

A—Drawbar Support
B—Drawbar
C—Cap Screws

Fig. 48-Drawbar And Support

Remove the drawbar (B, Fig. 48) and drawbar support (A) to permit installation of Rear Support Stand (D-05150ST).

Remove rear fenders and transmission case shield, if equipped (See Fig. 68).

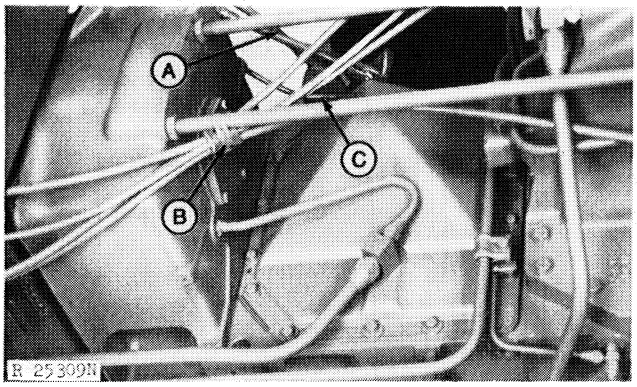

A—Shifter Cables
B—SCV Cable Clamp
C—Start-Safety Switch Wiring

Fig. 49-Control Cables

Disconnect transmission shifter cables (A, Fig. 49) and start-safety switch wiring (C) from right-hand side of transmission case.

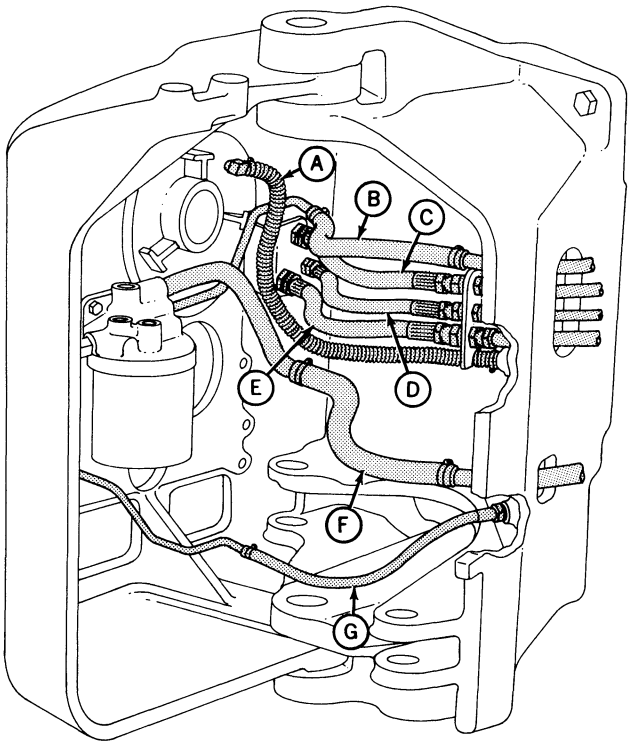

R 23388N

A—Clutch Housing-To-Torque Divider Housing Vent Hose
B—Clutch Housing Oil Return Hose
C—Pressure Control Valve Hose
D—Brake Pressure Hose
E—Pump Inlet Function Return Hose
F—Clutch Oil Pump Inlet Hose
G—PTO Brake Pressure Hose

Fig. 50-Hinge Separation Hose Connections

Disconnect clamp (B) and webbing from around rockshaft and SCV control cables which are clamped to the left-hand tie rod. Control cables may be fastened to the Sound-Gard Body with wire, and tied up out of the way.

Referring to Fig. 50, disconnect the vent hose (A), clutch housing oil return hose (B), pressure hose to control valve (C), brake pressure hose (D), pump inlet hose (function return) (E), clutch oil pump inlet hose (F), PTO brake pressure hose (G), and, if equipped, differential lock pressure hose (not shown).

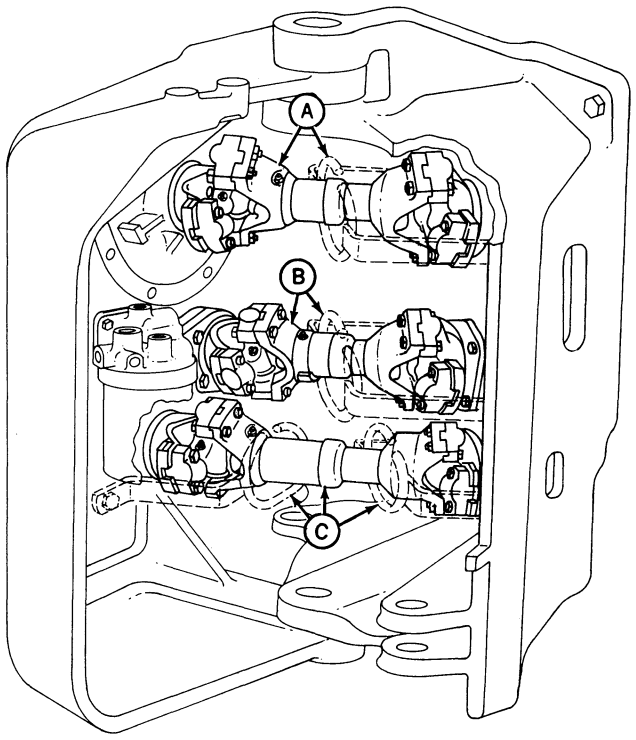

R 23389N

A—Transmission Input Drive Shaft and Guard
B—PTO Drive Shaft and Guard
C—Front Axle Drive Shaft and Guards

Fig. 51-Universal Joint Drive Shafts and Guards

Disconnect universal joint drive shafts and guards (Fig. 50) from the front hinge or from the rear hinge, depending on which half of tractor requires repair. If repair is required on both front and rear, remove the shafts and guards from the tractor.

Removal—Continued

A—Feedback Cylinder-to-Oil Filter Hose
B—Feedback Cylinder
C—Right-Hand Steering Cylinder
D—Left-Hand Steering Cylinder
E—Steering Cylinder Pins

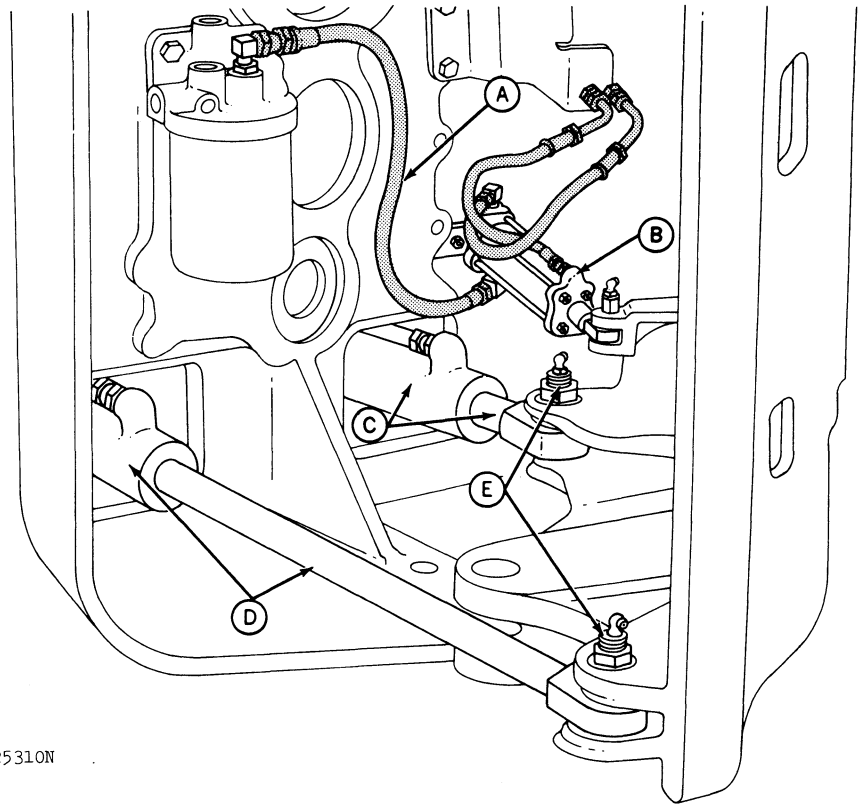

Fig. 52-Steering Cylinders and Feedback Cylinder Connections

Disconnect the left-hand steering cylinder piston rod (D, Fig. 52) from rear hinge by removing pin (E). Manually straighten the tractor. From the right-hand side of hinge, disconnect the feedback cylinder (B) and right-hand steering cylinder (C).

Install Rear Support Stand (D-05150ST) and Lifting Bracket (D-05153ST) following manufacturers' instructions. Block front wheels.

Using a 12-ton or larger floor jack, raise the tractor slightly. Position blocks under the lifting bar.

Remove hinge pivot pin retaining bolt (G, Fig. 53) from bottom of hinge. Remove the upper pivot pin retaining cap screw and washer (A).

If equipped, remove lower hinge pin bushing retainer.

Use the height adjusting jacks on the rear support stand to raise or lower the rear of the tractor to relieve any bind on the pins. Drive out pins, and remove spacers and thrust packs (see Fig. 57).

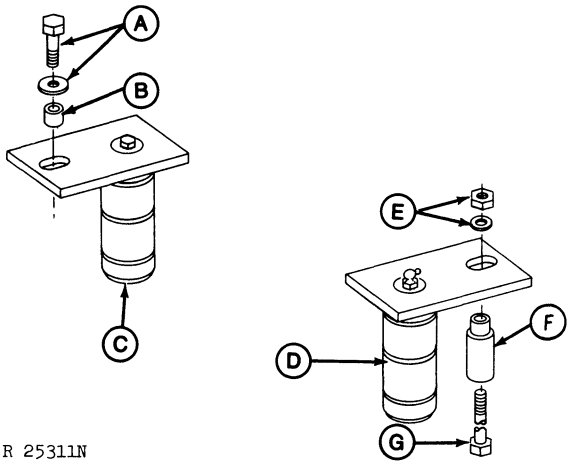

A—Cap Screw
B—Spacer
C—Upper Pivot Pin
D—Lower Pivot Pin
E—Nut and Washer
F—Spacer
G—Hex. Bolt

Fig. 53-Upper and Lower Pivot Pins

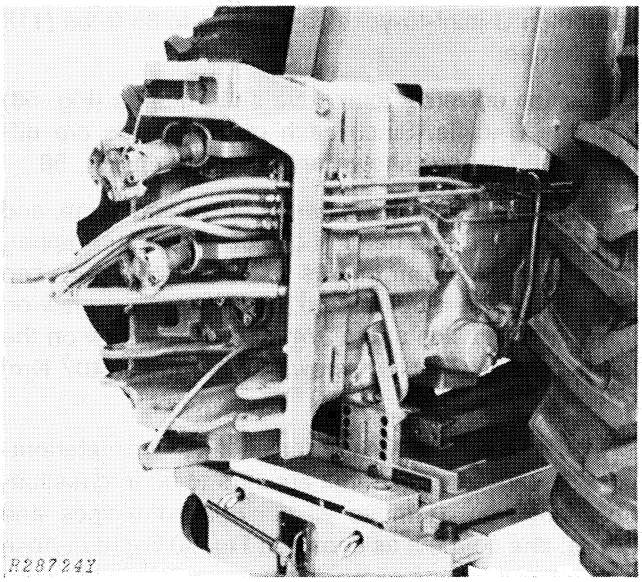

Fig. 54-Rear Hinge Separated From Front Hinge

Carefully roll rear section away from front section (Fig. 54).

Repair

With the front and rear units separated, repairs may be made on either unit with ease. If it is necessary to remove the front hinge from the clutch housing, or remove the rear hinge from the torque divider, refer to "Front Hinge" on page 25-31, or "Rear Hinge" on page 25-32, for removal instructions.

Fig. 55-Removing Hinge Bushing

The hinge pivot pins and bushings (arrows, Fig. 55) should be inspected for wear and replaced if required. To remove bushings, use an OTC No. 27531 Bushing Driver Disk with handle. Install new bushings slightly deeper than outside casting surface. Lubricate bushings.

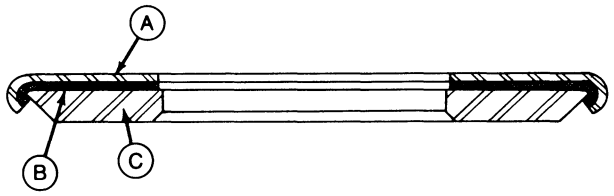

R30219

A—Liner Plate
B—Self-Lubricating Liner
C—Wear Plate

Fig. 56-Thrust Pack

A thrust pack (Fig. 56) is used on top and bottom of the upper hinge pin bushing. It consists of a crimped outer plate (A), called a liner plate, and a wear plate (C) which rotates freely in the liner plate. Between these two plates is a self-lubricating liner (B).

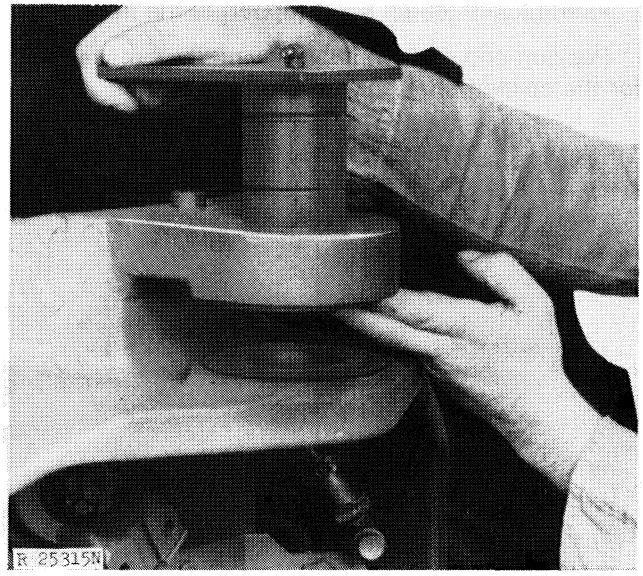

A—Upper Pivot Pin
B—Spacer
C—Thrust Packs

Fig. 57-Thrust Pack Installation

The thrust pack is installed so that the upper wear plate faces downward and the lower plate faces upward.

Inspect the thrust pack to make sure the wear plate turns freely. If the wear plate does not turn freely, replace with a new thrust pack assembly.

Installation

Move rear tractor assembly forward to align front and rear hinge pivot pin holes.

Position the 17/32 - 5/8 in. (13.5 - 15.88 mm) spacer in rear hinge (Fig. 57). Insert a thrust pack on top and bottom of front hinge pivot pin bushing, and install pivot pin. Secure with a 1/2 - 1-3/8-in. cap screw and flat washer. Tighten cap screw to 85 ft-lbs (115 Nm) torque.

Position stepped spacer in front hinge, and install lower pivot pin (D, Fig. 53). Install 1/2 - 4-1/2-in. hex bolt from the bottom, using a flat washer and hex nut. Tighten nut to 85 ft-lbs (115 Nm) torque.

Install lower hinge pin bushing retainer.

Connect feedback cylinder to rear hinge.

When installing universal joint drive shafts (Fig. 51), notice that each of the three shafts are different in length. Install drive shafts as follows:

Longest shaft (bottom) drives the front differential.
Shortest shaft (middle) drives the PTO.
Intermediate length shaft (upper) is the input drive.

Position end of drive shaft having the grease fitting for the splined shaft toward the front hinge.

Tighten U-joint-to-yoke cap screws to 85 ft-lbs (115 Nm) torque.

Position universal joint drive shaft guards (Fig. 58) over the U-joints. Since each of the guards are different, all four are shown and identified in Fig. 58.

Use special washers between guard and hinge, and between guard and head of cap screw. Secure upper, lower rear, and front guards with 3/4 - 5-1/4 in. cap screws. On the middle guard, use 3/4 - 7 in. screw on the right-hand side and a 3/4 - 7-1/2 in. screw on the left-hand side. Tighten screws to 300 ft-lbs (407 Nm) torque.

Inspect hydraulic hoses for chafing and deterioration. Discard any hose that appears to be in questionable condition. Remove all caplugs from pipes and hoses, and connect as shown in Fig. 50. Tighten hose clamps and fittings securely.

Install control cables and wiring (Fig. 49). Remove Rear Support Stand, Lifting Bar, Floor Jack and blocks.

Install transmission case shield and fenders, if equipped.

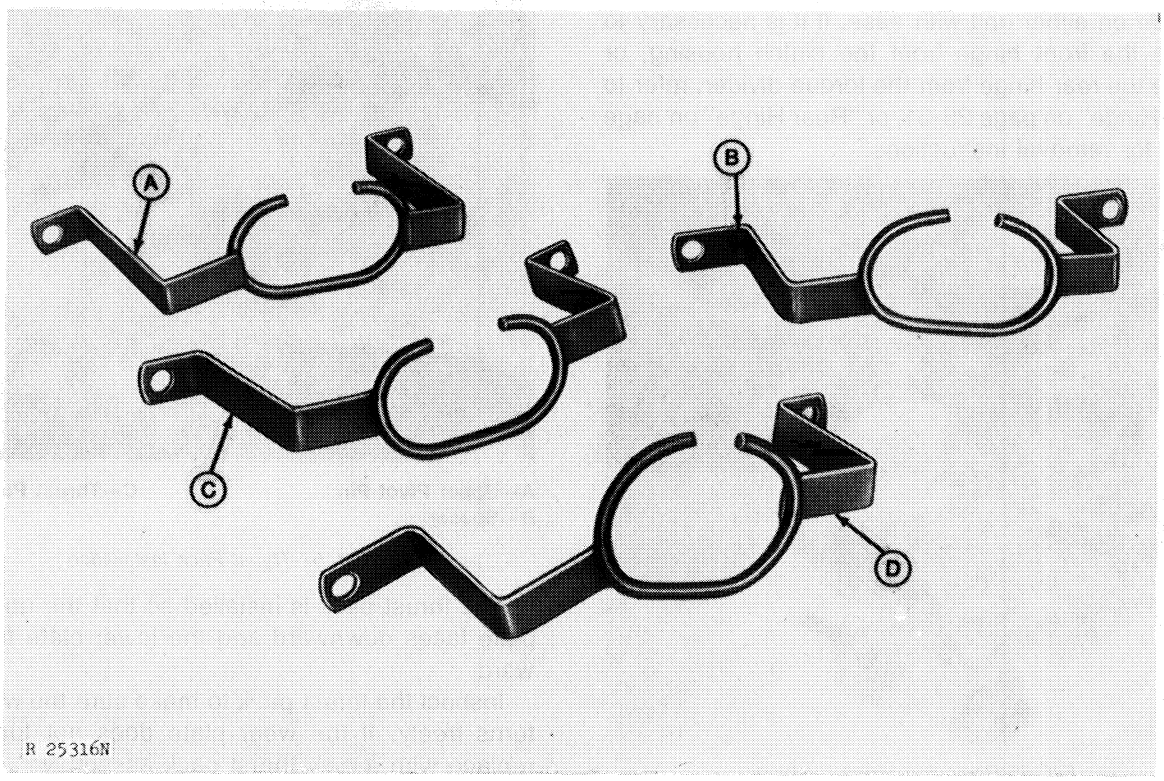

A—Upper Guard **B—Front Guard** **C—Middle Guard** **D—Lower Guard**

Fig. 58-Universal Joint Drive Shaft Guards

Install drawbar support (Fig. 48). Use four 3/4 - 2 in. cap screws and plain washers to fasten front of support to torque divider. Fasten rear of support to the transmission case using two 3/4 - 5-1/4 in. cap screws with lock washers at front, and two 3/4 - 6 in. cap screws with lock washers at rear. Tighten screws to 300 ft-lbs (407 Nm) torque. Install drawbar.

Connect steering cylinders by inserting pin from bottom and using a spacer, washer, and special lock nut. Tighten lock nut to 300 ft-lbs (407 Nm) torque.

Lubricate hinge pivot pins and steering cylinder pins using John Deere Multi-Purpose grease or an equivalent SAE Multi-Purpose grease. See Operator's Manual.

Refill transmission-hydraulic system using oil specified in Operator's Manual.

Check operation of tractor, making full right and left turns. Make sure universal joint drive shafts do not strike guards. Inspect pipe and hose connections for leaks.

FRONT HINGE

Removal

Discharge the accumulator. (See CAUTION, page 25-6.)

Removal both fuel tanks. (See Section 30, Group 15.)

Remove the Sound-Gard Body. (See Section 80, Group 5.)

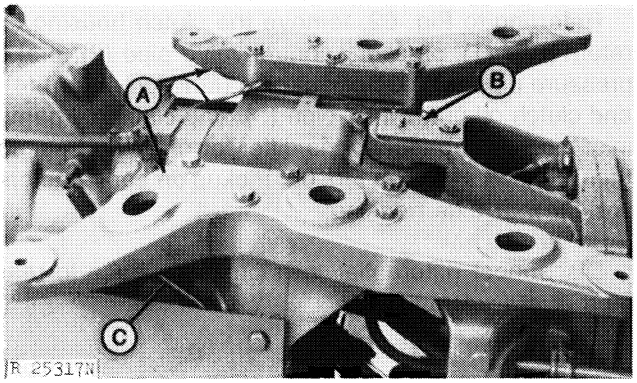

A—Sound-Gard Body Supports **C—Lube Pipe**
B—Upper Hinge Pivot Pin

Fig. 59-Sound-Gard Body Supports

If the front hinge is to be replaced, remove the Sound-Gard Body Supports (A, Fig. 59). Otherwise, the supports may be left on the front hinge. Remove lube pipe (C).

Separate the rear hinge from the front hinge. Refer to instructions starting on page 25-26.

⚠ CAUTION: Block right and left sides of front differential support to prevent tilting of tractor.

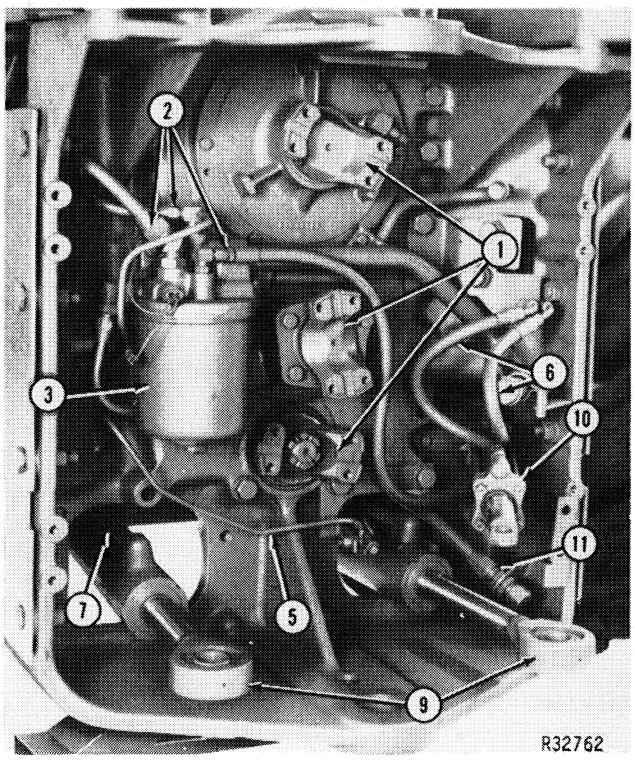

Fig. 60-Front Hinge Removal Steps

1. Remove bearing quills from hi-lo, PTO, and drive shaft.

NOTE: Drive shaft yoke is removed first and then snap ring is removed to pull quill.

2. Disconnect all lines from clutch filter housing.
3. Remove clutch filter and filter housing.
4. (Not Illustrated). Remove clutch oil pump by using jackscrews.
5. Remove PTO brake line.
6. Remove hoses from steering feedback cylinder.
7. Remove hoses from steering cylinders (front and back).
8. (Not Illustrated). Remove hoses from steering cylinders.
9. Remove steering cylinders and brackets.
10. Remove steering feedback cylinder.
11. Drain engine crankcase oil and remove drain pipe.

Install stands and blocking under clutch housing and remove Support Bracket (D-05153ST).

Remove side frame to front hinge bolts.

Removal—Continued

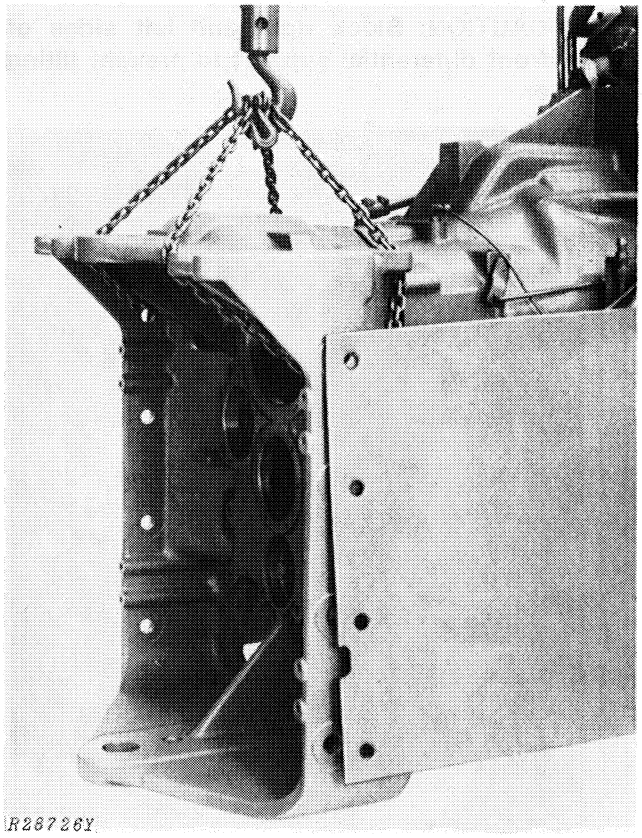

Fig. 61-Removing Front Hinge

Fasten a heavy chain around hinge, and attach to hoist. Remove hinge-to-clutch housing cap screws. Lift-off hinge (Fig. 61).

Installation

Install front hinge on clutch housing using a new gasket. Follow instructions beginning on page 25-24 for installing hinge on clutch housing and for joining front and rear hinge together.

If the Sound-Gard Body supports were removed, fasten them to hinge using 3/4 - 4-1/2 in. cap screws. Tighten screws to 300 ft-lbs (407 Nm) torque.

Mount Sound-Gard Body on supports. Refer to Section 80, Group 5, for installation instructions.

Mount fuel tanks, and check tractor operation.

REAR HINGE

Removal

Discharge the accumulator. (See CAUTION, page 25-6.)

Separate rear hinge from front hinge (Fig. 54). (Refer to page 25-26).

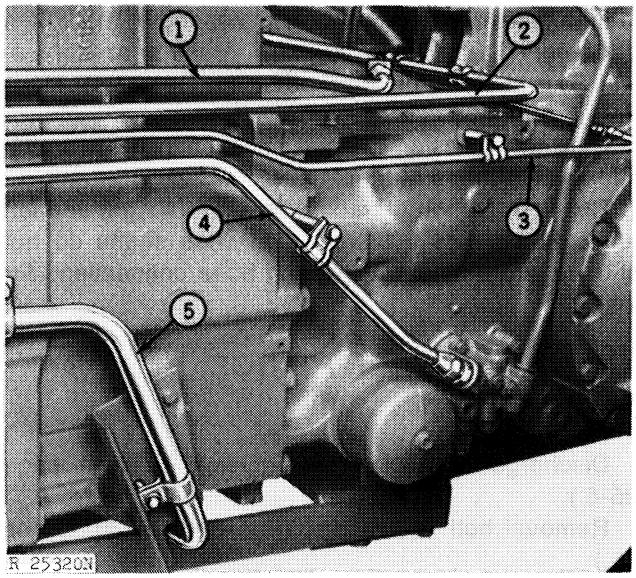

Fig. 62-Left-Hand Pipes

Referring to Fig. 62, remove the clutch housing oil return pipe (1), pressure control valve pipe (2), brake pressure pipe (3), pump inlet pipe (function return) (4), and clutch oil pump inlet pipe (5). The clutch oil pump inlet pipe pickup location is different on early tractors than location shown in Fig. 62. Pickup on early tractors is near rear axle housing.

Disconnect differential lock pressure hose-to-rear pipe at bracket on hinge.

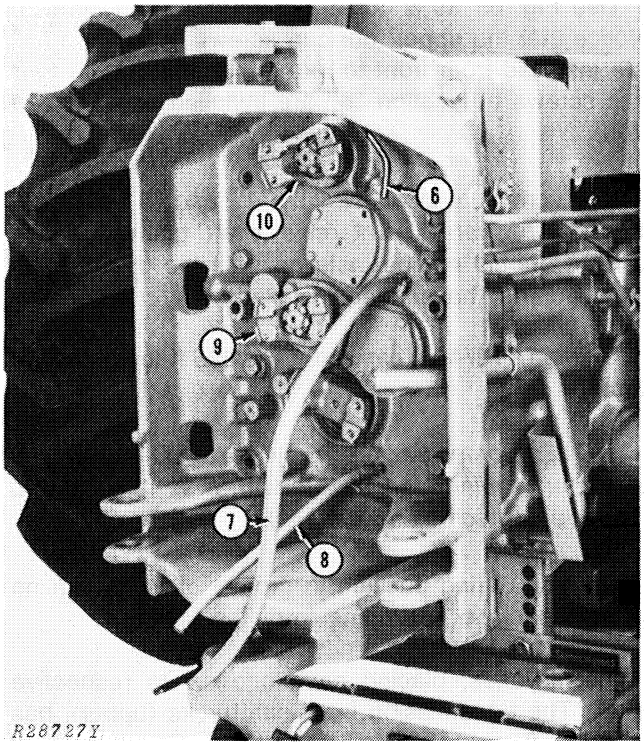

Fig. 63-Rear Hinge Removal Steps

Referring to Fig. 63, remove the input shaft lube pipe (6), vent hose (7), and PTO brake hose (8).

Remove cotter pin from PTO drive shaft yoke nut (9), and input shaft yoke nut (10). Using the JDT-27 Yoke Holding Tool, remove both nuts. Then, remove yokes from shafts. Mark or tag one of the two yokes so that each may be installed on the correct shaft.

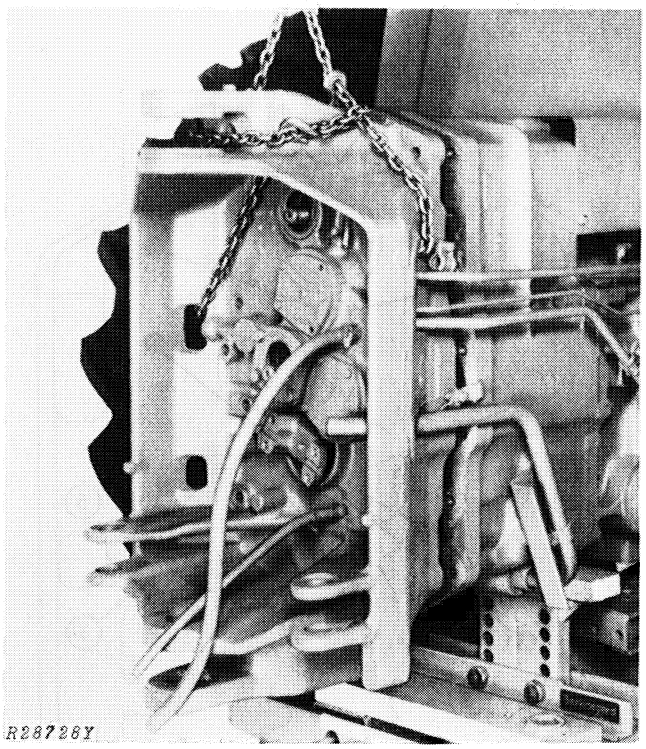

Fig. 64-Removing Rear Hinge

Fasten a heavy chain around the rear hinge, similar to that shown in Fig. 64.

Remove the hinge-to-torque divider cap screws and carefully remove hinge.

Installation

Remove the old gasket (rear hinge-to-torque divider), and properly prepare joining surfaces. Thoroughly clean hinge and torque divider housings sealed by the gasket.

Apply a light coating of grease to both sides of gasket, and place gasket on dowels of hinge. Install hinge on torque divider.

Installation—Continued

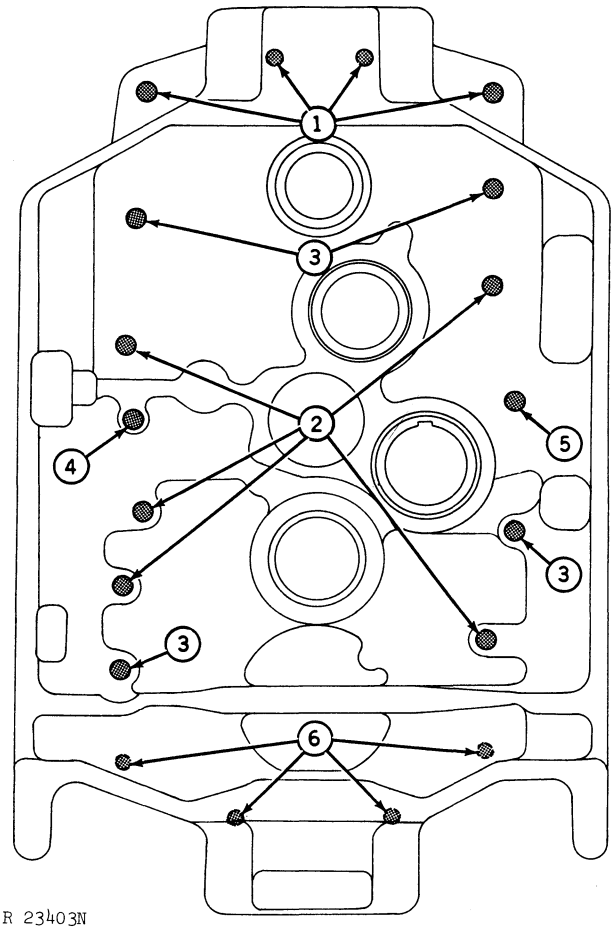

1—3/4 - 2-3/4 in.
2—3/4 - 5 in.
3—3/4 - 5-1/2 in.
4—3/4 - 6-3/4 in.
5—3/4 - 7-1/2 in.
6—3/4 - 2-3/4 in.

Fig. 65-Rear Hinge Cap Screw Location Reference

Use Fig. 65 as a guide for installing cap screws. Notice that the upper four cap screws at location "1" are installed from front to rear, while the bottom four cap screws at location "6" are installed from rear to front.

Cap screws at locations "3", "4", and "5" are locations for universal joint drive shaft guards. These screws should not be installed until the drive shafts (and guards) have been installed.

Tighten all 3/4-in. cap screws to 425 ft-lbs (576 Nm) torque.

NOTE: Some tractors may have D-grade cap screws (3 radial dashes on head). If so replace with F-grade cap screws (6 dashes).

Position O-ring packing in groove of yoke with no part of packing protruding from the yoke.

Install yokes, placing each one on its respective shaft. The transmission input shaft yoke (upper), has a larger flange diameter than the PTO yoke.

IMPORTANT: If the front axle drive shaft yoke is accidentally interchanged with the transmission input shaft yoke, the yoke placed on the transmission input shaft will ride against the bearing and cause it to bind, preventing the shaft from rotating.

Be sure groove in flange is indexed between the drilled holes for the cotter pin.

Use the thickest yoke retaining washer that will permit installation of the cotter pin. Install nut on shaft, and tighten to 450 ft-lbs (610 Nm) torque. Use JDT-27 Yoke Holding Tool (see Section 50, Group 30) to hold yoke when tightening nut. If torque wrench can not be set to specified amount, use JDST-38 Torque Multiplier. Insert cotter pin, and bend ears over nut.

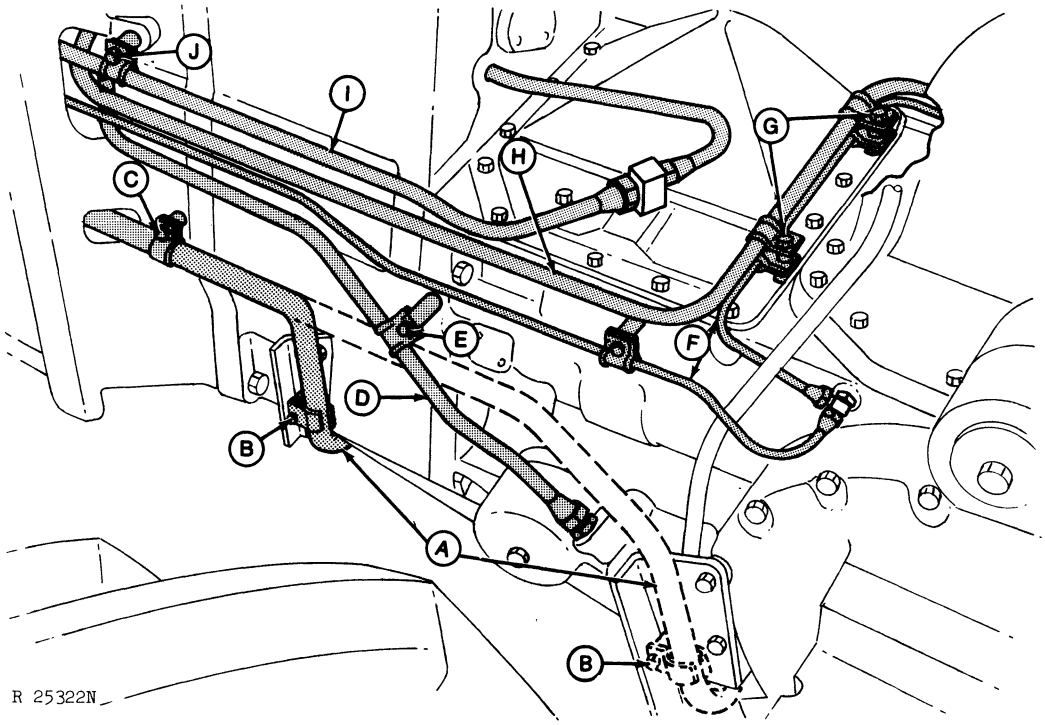

A—Clutch Oil Inlet Pipe
B—Spacer and Hex. Bolt
C—Spacer and Cap Screw
D—Function Return Pipe
E—Spacer and Cap Screw
F—Brake Pipes
G—Spacers and Cap Screws (3/8"-top; 1/2"-bottom)
H—Pressure Control Valve Pipe
I —Oil Return Pipe
J—Spacer and Cap Screw

Fig. 66-Left-Hand Hydraulic Oil Pipe Mountings

Mount hydraulic oil pipes on side of transmission case. Use Fig. 66 as a guide for installing pipes, clamps, and spacers in the correct locations.

Install clutch oil pump inlet pipe (A). Secure pipe to bracket at location "B" using a 3/8 - 1-5/16 in. (9.53 - 33.34 mm) spacer, pipe clamps, and a 3/8 - 2-1/2 in. hex. bolt with nut and lock washer. At "C", fasten pipe to front hinge with a 3/8 - 3/4 in. (9.53 - 19.0 mm) spacer, pipe clamps, and a 3/8 - 1-7/8 in. cap screw with lock washer.

Install function return pipe (D). Secure to transmission case using a 1/2 - 2-3/4 in. (12.7 - 69.85 mm) spacer, pipe clamps, and a 3/8 - 3-3/4 in. cap screw with lock washer at "E".

Install brake pressure pipe (F). Use a 1/2 - 2 in. (12.7 - 50.8 mm) spacer, pipe clamps, and a 3/8 - 3 in. cap screw with lock washer to fasten pipe to left side of transmission case.

Install pressure control valve pipe (H). At locations "G", use pipe clamps, two 3/8 - 3/4 in. (9.53 - 19.0 mm) spacers, and mount on top of right-hand brake pipe clamps, which in turn mounts on top of 1/2 - 5/16 in. (12.7 - 7.94 mm) spacers. Fasten at both locations using 3/8 - 2-1/2 in. cap screws.

Install clutch housing oil return pipe (I). Secure pipe to front hinge at "J" with a 3/8 - 1-1/16 in. (9.53 - 27.0 mm) spacer, pipe clamps, and a 3/8 - 2-1/2 in. cap screw with lock washer.

Roll rear tractor assembly forward and connect both hinges together. Follow instructions beginning on page 25-30 for completing the installation.

Be sure to refill the transmission-hydraulic system and lubricate the hinge pins using lubricants specified in Operator's Manual. Check operation of tractor making full right and left turns. Inspect pipes and hoses for leaks.

TORQUE DIVIDER

REMOVAL

Place tractor in full right-hand turn to open left side of hinge area. (See CAUTION, page 25-2). Shut-off engine and disconnect battery ground cable to prevent someone from accidentally starting the engine while working in hinge area.

Discharge the accumulator. See CAUTION, page 25-6. Drain the transmission case.

Remove top drive shaft only in hinge area.

Follow instructions given on pages 25-26 and 25-27 for removal of pipes, hoses, drive shaft, and other necessary parts to make the separation. It is not necessary to remove the Sound-Gard Body for separating the torque divider from the rear hinge.

Remove top rear drive shaft yoke from rear hinge.

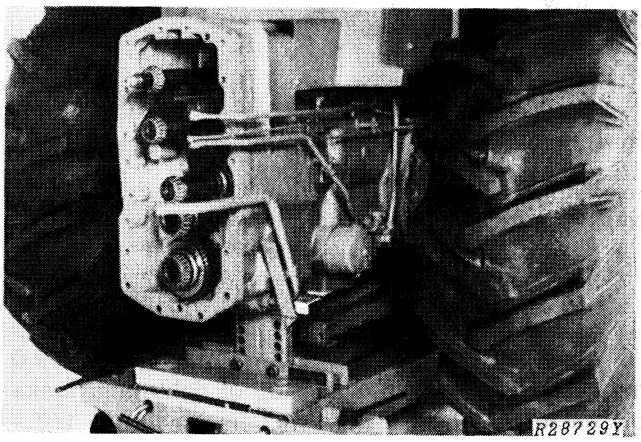

Fig. 67-Torque Divider Separated From Front Hinge

Position Rear Support Stand (D-05150ST) under transmission. Bolt mounting pad adapter to drawbar mounting pad. Position cradle adapter under rear of transmission.

Install Lifting Bracket (D-05153ST) following manufacturers' instructions.

Remove rear hinge-to-torque divider cap screws.

Roll torque divider and tractor rear end back away from the front hinge.

To remove the torque divider from the transmission case, do the following:

Remove tie rods, lube pipe, and cover plate from top of transmission case. Remove two cap screws from front flange inside case securing case to torque divider.

Remove shafts and gears from front of torque divider to prevent them from accidentally falling out during removal. Remove steadyrest.

Fasten a heavy chain to the torque divider and to a hoist. Remove the torque divider-to-transmission case cap screws, and lift off torque divider.

Refer to Group 20, Section 50 for information pertaining to servicing the torque divider.

INSTALLATION

Remove old gasket used between the torque divider and the transmission case. Properly prepare joining surfaces of both assemblies. Apply a light coating of grease to both sides of gasket, and position gasket on transmission case dowels.

Make sure that the interior of both housings sealed by the gasket are clean. Install torque divider on transmission case. Secure with fifteen 3/4 - 2-3/4 in. cap screws. Tighten screws to 300 ft-lbs (407 Nm) torque.

Remove the old cover plate gasket. Install cover plate using a new gasket. Fasten cover plate to case using 3/8 - 1 in. cap screws, special washers, and lock washers. Do not install cap screws in two holes used for mounting spacers and pipe clamps until pressure control valve pipe has been installed.

Install tie rods. Tighten tie rods to 100 ft-lbs (130 Nm) torque. (See Section 70, Group 30 for additional information on tie rods and rockshaft.) Leave torque divider lube pipe off until torque divider is fastened to the front hinge.

Install steadyrest with PTO upper idler shaft using two 3/8 - 3/4 in. special cap screws (having a nylon insert). Place shafts and gears in position. Refer to Group 20, Section 50 for specific installation instructions.

Refer to information given beginning on page 25-33 for installing torque divider to hinge and for joining both hinge sections together.

TRANSMISSION

REMOVAL

Discharge the accumulator (See CAUTION, page 25-6.)

Remove the fenders and transmission case shield, if equipped (Fig. 68). Drain the transmission case.

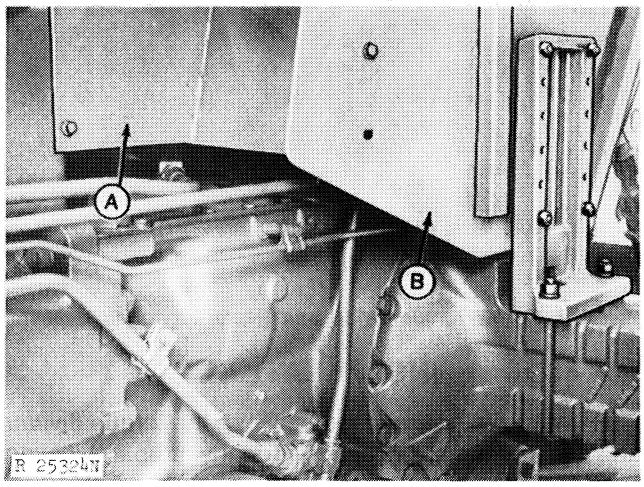

A—Transmission Case Shield **B—Fender**

Fig. 68-Fenders and Transmission Case Shield

CAUTION: Jack up any one of the four wheels to relieve any torque build up in the power train, preventing any possible personal injury that could result from the release of torque.

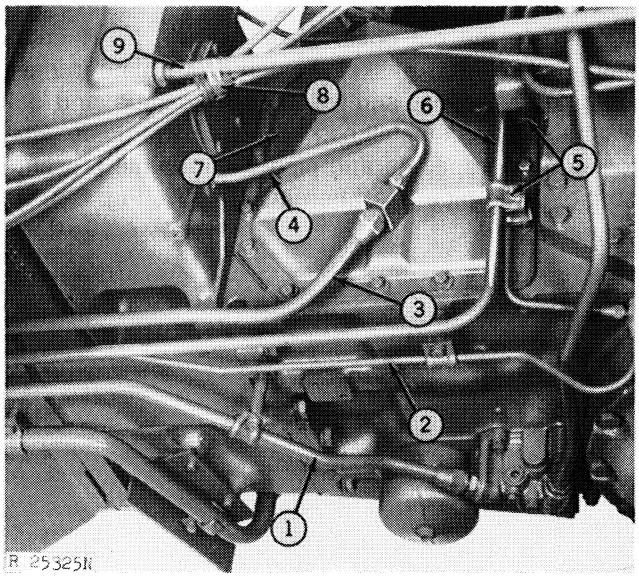

Fig. 69-Left-Hand Removal Procedures

Refer to Fig. 69 and 70 and perform the following removal steps:

(1) Disconnect the pump inlet pipe (function return) and clamps.

(2) Disconnect brake pipe from fitting on side of transmission case. Disconnect pipe clamps.

(3) Disconnect clutch oil return pipe.

(4) Remove torque divider lube pipe.

(5) Disconnect clamps and spacers from pressure control valve pipe and brake pipe.

(6) Disconnect pressure control valve pipe.

(7) Remove cover plate from top of transmission case.

(8) Disconnect hose clamp from control cables and tie rod. Disconnect cables from rockshaft and selective control valves.

(9) Remove tie rods from torque divider housing.

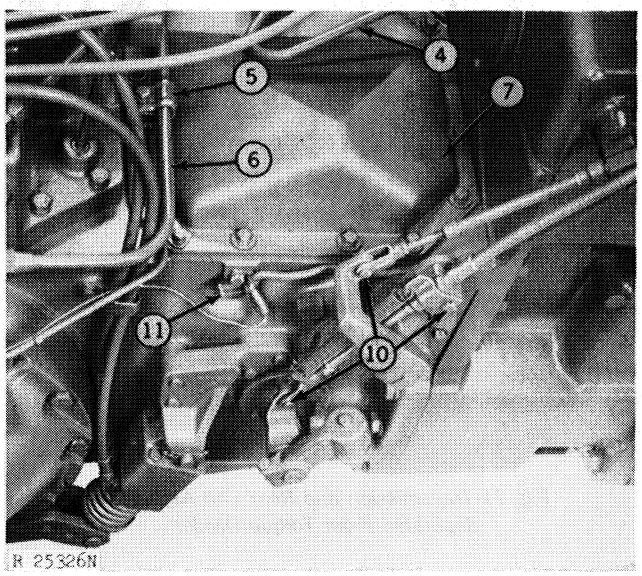

Fig. 70-Right-Hand Removal Procedures

(10) Disconnect transmission shifter cables by removing yoke pins and cable clamp screw. Fasten cables out of way.

(11) Disconnect the neutral start switch wiring and transmission lubricating oil pressure sender wiring from side of transmission case.

REMOVAL—Continued

Disconnect differential lock rear pipe at bracket on hinge. Disconnect clamps on transmission case.

Remove the drawbar and drawbar support. (See Fig. 48.)

Install Rear Support Stand (D-05150ST) as described on page 25-36.

Install Lifting Bracket (D-05153ST) following manufacturers' instructions.

Block front wheels to prevent front end from moving when separating.

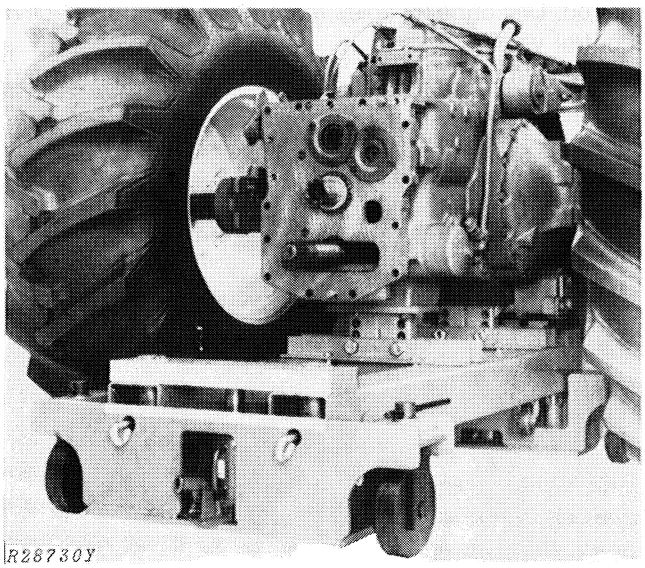

Fig. 71-Transmission and Rear End Assembly Separated From Torque Divider

Remove transmission-to-torque divider cap screws. Carefully separate transmission and rear end assembly from the torque divider (Fig. 71).

For service information on the Quad-Range transmission, refer to Section 50, Group 25.

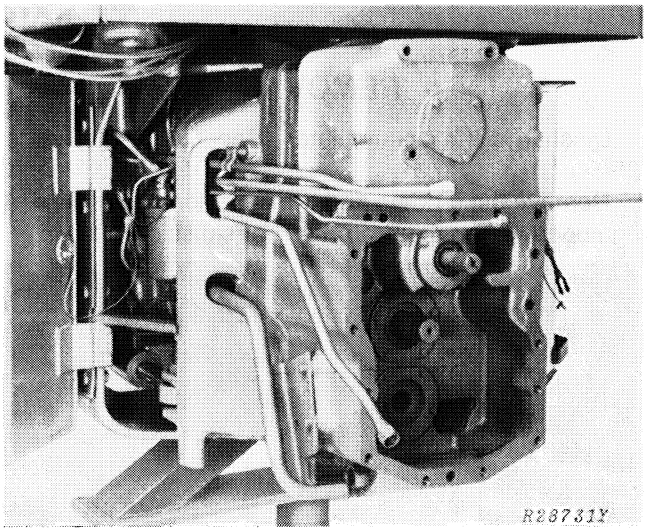

Fig. 72-Torque Divider and Tractor Front End

INSTALLATION

Remove old gasket used between the torque divider and the transmission case. Properly prepare joining surfaces of both assemblies. Apply a light coating of grease to both sides of gasket, and position gasket on transmission case dowels.

Make sure that the interior of both housings sealed by the gasket are clean. Join transmission case to torque divider. Secure with fifteen 3/4 - 2-3/4 in. cap screws. Tighten screws to 300 ft-lbs (407 Nm) torque.

Remove the old cover plate gasket. Install cover plate using a new gasket. Fasten cover plate to case using 3/8 - 1 in. cap screws, special washers, and lock washers. Do not install cap screws in two holes used for mounting spacers and pipe clamps until pressure control valve pipe has been installed (6, Fig. 69).

Install tie rods. Tighten tie rods to 100 ft-lbs (130 Nm) torque. (See Section 70, Group 30 for additional information on tie rods and rockshaft.)

Remove the support stands. Install drawbar and drawbar support (Fig. 48).

Reverse the remaining separation steps on page 25-37. Correctly install hydraulic pipe clamps and spacers (Fig. 69).

Fill the transmission-hydraulic system, using the oil specified in Operator's Manual.

Install transmission case shield and fenders, if equipped.

Check operation of tractor. Inspect connections for leaks.

SCV and rockshaft controls should be checked and adjusted per section 70-30-12.

Litho in U.S.A.

Litho in U.S.A.

Group 30
SPECIFICATIONS AND SPECIAL TOOLS

SPECIFICATIONS

Item	Specification
Air conditioning compressor belt deflection (at 15 lbs. [66.7 N] pull)	0.25 in. (6.35 mm)
Fan belt deflection (at 25 lbs. [111.2 N] pull)	1 in. (25.4 mm)
Hinge pivot pin dia. (new)	2.5030 ± 0.0005 in. (63.576 ± 0.013 mm)
Hinge pivot pin bushings	
O.D.	3.050 ± 0.002 in. (77.47 ± 0.05 mm)
I.D.	2.512 ± 0.002 in. (63.8 ± 0.05 mm)
Length	1.500 ± 0.005 in. (38.1 ± 0.13 mm)
Weight of engine with clutch assembly (approx.)	
8430	2000 lbs. (908 kg)
8630	2600 lbs. (1 186 kg)

Item	Torque Ft-lbs. (Nm)
Front Axle	
Side frame-to-axle support	300 (407)
Axle support-to-engine front support (at front)	300 (407)
Differential rear support-to-axle support	
3/4-in. screws	300 (407)
7/8-in. screws	445 (610)
Engine	
Rear mounting flange-to-clutch housing	300 (407)
Oil pan-to-clutch housing	300 (407)-8630; 85 (115)-8430
Side frame-to-front hinge	300 (407)
Engine front support-to-engine block	300 (407)-8630; 170 (230)-8430
Engine front support-to-axle support	
(at top) - 5/8-in. screws	170 (230)
(at front) - 3/4-in. screws	300 (407)
Hydraulic pump support-to-engine	85 (115)
Hydraulic pump drive coupling	30 (41)
Clutch Housing	
Front hinge-to-clutch housing	300 (407)
Clutch output shaft bearing quill	35 (47)
PTO clutch output shaft bearing quill	35 (47)
Clutch oil filter housing-to-hinge	35 (47)
Front axle drive shaft yoke nut	450 (610)
Universal joint drive shafts-to-yokes, 8630	85 (115)
8430	70 (95)
Universal joint drive shaft guard screws	300 (407)

Litho in U.S.A.

SPECIFICATIONS—Continued

Item	Torque Ft-lbs (Nm)
Hinge	
Pivot pin retaining screws	85 (115)
Universal joint drive shafts-to-yokes, 8630	85 (115)
8430	70 (95)
Universal joint drive shaft guard screws	300 (407)
Drawbar support-to-torque divider and to transmission case	300 (407)
Universal joint drive shaft yoke nuts	450 (610)
Torque Divider	
Tie rods (torque divider-to-rockshaft)	100 (130)
Torque divider housing-to-transmission case	300 (407)
Transmission	
Tie rods (torque divider-to-rockshaft)	100 (130)
Torque divider housing-to-transmission case	300 (407)

SPECIAL TOOLS

No.	Name	Use
JDG-1-9* (8630)	Engine Lift Brackets	Engine removal
JDE-63* (8430)	Engine Lift Brackets	Engine removal
JDG-1*	Engine Sling	Engine removal
D-01043AA*	Load Positioning Sling	Engine Removal
D-05150ST*	Rear Support Stand	Tractor Separation
D-05151ST*	Front Support Stand	Tractor Separation
D-05152ST*	Front Support	Tractor Separation
D-05153ST*	Lifting Bar	Tractor Separation
JDT-27*	Yoke Holding Tool	Removing and installing drive shaft yokes
JDST-38*	Torque Multiplier	Used with torque wrench to obtain torque values above wrench capacity
27531*	Disk	Removing and installing hinge pivot pin bushings

** Order from Service Tools, P.O. Box 314, Owatonna, Minnesota 55060*

Section 20
8430 ENGINE

CONTENTS OF THIS SECTION

Page

GROUP 5 - GENERAL INFORMATION AND DIAGNOSIS
- General Information 5-2
- Diagnosing Engine Malfunctions 5-2

GROUP 10 - CYLINDER HEAD, VALVES, AND CAMSHAFT
- General Information 10-1
- Diagnosing Malfunctions 10-1
- Preliminary Valve Checks 10-2
- Cylinder Head and Valves
  - Removal and Repair 10-2
  - Assembly 10-4
  - Installation 10-4
  - Valve Clearance Adjustment 10-5
- Camshaft
  - Removal 10-5
  - Repair 10-5
  - Installation 10-6

GROUP 15 - CYLINDER BLOCK, LINERS, PISTONS AND RODS
- General Information 15-1
- Diagnosing Malfunctions 15-1
- Removal 15-2
- Repair
  - Pistons 15-2
  - Liners 15-4
  - Piston Pins 15-4
  - Rods 15-5
  - Block 15-6
- Assembly and Installation 15-6

GROUP 20 - CRANKSHAFT, MAIN BEARINGS, AND FLYWHEEL
- General Information 20-1
- Diagnosing Malfunctions 20-1
- Removal 20-2
- Checking End Play 20-2

Page

- Inspection and Repair
  - Flywheel 20-3
  - Rear Crankshaft Oil Seal, Housing, and Wear Sleeve 20-4
  - Main Bearings and Journals 20-4
  - Damper Pulley 20-5
  - Front Oil Seal and Wear Sleeve 20-6
- Installation 20-6

GROUP 25 - LUBRICATION SYSTEM
- General Information 25-1
- Diagnosing Malfunctions 25-2
- Checking Oil Pressure 25-2
- Oil Filter and Housing Repair 25-2
- Oil Cooler 25-3
- Oil Cooler Bypass Valve Repair 25-3
- Oil Pump Repair 25-3
- Installation 25-4

GROUP 30 - COOLING SYSTEM
- General Information 30-1
- Diagnosing Malfunctions 30-2
- Radiator and Fan 30-2
- Water Pump 30-2
- Water Manifold and Thermostats 30-4

GROUP 35 - SPECIFICATIONS AND SPECIAL TOOLS
- Cylinder Head, Valves, and Camshaft 35-1
- Cylinder Block, Liners, Pistons and Rods 35-1
- Crankshaft, Main Bearings and Flywheel 35-2
- Lubrication System 35-2
- Cooling System 35-3
- Engine Break-In 35-3
- Special Tools 35-4

Litho in U.S.A.

Group 5
GENERAL INFORMATION AND DIAGNOSIS

GENERAL INFORMATION

This is a turbo-charged, liquid cooled, 6-cylinder, diesel fueled, valve-in-head, vertical in-line four-cycle engine.

For basic theory on engine operation see FOS Manual 30—ENGINES.

DIAGNOSING ENGINE MALFUNCTIONS

Review diagnostic procedures provided in FOS Manual 30—ENGINES, Chapter 12 "Diagnosis and Testing".

Will Not Start

Fuel System Malfunction—See Section 30
- Foreign matter in fuel
- Improper fuel
- Faulty fuel pump
- Fuel shut off at tank
- Restricted air intake system
- Faulty injection nozzles
- Plugged fuel filter

Electrical System Malfunction—See Section 40
- Corroded or loose battery
- Weak battery

Uneven Running or Frequent Stalling

Basic Engine Problem—See This Section
- Coolant temperature below normal
- Engine overheating
- Improper valve clearance
- Cylinder head gasket leaking
- Valves sticking or burned
- Worn or broken compression rings
- Low compression
- Incorrect timing

Service Problem—See Section 10
- Low fuel supply

Fuel System Malfunction—See Section 30
- Restricted fuel lines or filters
- Faulty fuel pump
- Faulty injection pump
- Faulty injection nozzles
- Exhaust system restricted

Engine Misses

Basic Engine Problem—See This Section
- Incorrect timing
- Engine overheating
- Weak valve springs
- Incorrect valve clearance
- Burned, warped, pitted, or sticking valves
- Low compression
- Worn camshaft lobes (could be caused by faulty damper)

Fuel System Malfunction—See Section 30
- Water in fuel
- Mixture of gasoline and diesel fuels
- Air in fuel
- Faulty injection nozzles
- Faulty injection pump

Lack of Power

Basic Engine Problem—See This Section
- Incorrect timing
- Wrong viscosity crankcase oil
- Engine overheating
- Blown cylinder head gasket
- Worn camshaft lobes
- Incorrect valve clearance
- Incorrect valve timing
- Burned, warped, pitted or sticking valves
- Weak valve springs
- Low compression

Service Problem—See Section 10
- Dirty or obstructed air cleaners
- Improper fuel
- Wrong oil viscosity

Fuel System Malfunction—See Section 30
- Incorrect throttle linkage
- Plugged fuel tank vent
- Plugged fuel filters
- Faulty injection pump
- Faulty injection nozzles
- Faulty fuel pump
- Restricted exhaust system
- Low intake manifold pressure

Power Train Malfunction—See Section 50
- Clutch slipping

Litho in U.S.A.

Engine Overheats

Basic Engine Problem—See This Section
- Loose or broken fan belt
- Faulty thermostats
- Cooling system limed up
- Defective radiator pressure cap
- Defective head gasket
- Incorrect engine timing
- Crankcase oil level low
- Low Coolant level
- Radiator or side grille screen dirty
- Faulty Water Pump

Service Problem—See Section 10
- Engine overloaded
- Crankcase oil level low
- Improper fuel

Fuel System Malfunction—See Section 30
- Excessive fuel delivery
- Improper injection pump timing

Excessive Oil Consumption

Basic Engine Problem—See This Section
- Crankcase oil too thin
- Oil pressure too high
- Oil level too high
- Plugged oil cooler—oil or water passages
- Restricted oil passage from valve cover
- Worn valve guides or valve stems
- Oil control rings worn or broken
- Scored liners or pistons
- Excessive ring groove wear in piston
- Rings sticking in grooves of piston
- Oil return holes in piston clogged
- Insufficient piston ring tension
- Piston ring gaps not staggered
- Excessive main or connecting rod bearing clearance
- Worn crankshaft thrust bearing (Mis-aligned piston and rod)
- Front or rear crankshaft oil seal faulty

Service Problem—See Section 10
- Crankcase oil too thin
- Oil level too high

Fuel System Malfunction—See Section 30
- Restricted air intake system

Low Oil Pressure

Basic Engine Problem—See This Section
- Low oil level
- Improper regulating valve adjustment
- Improper oil
- Excessive main and connecting rod bearing clearance
- Leakage at internal oil passages
- Faulty oil pump
- Defective engine oil cooler

Service Problem—See Section 10
- Low oil level
- Improper oil

Electrical System Malfunction—See Section 40
- Defective oil pressure indicator lamp
- Faulty oil pressure sending unit

High Oil Pressure

Basic Engine Problem—See This Section
- Stuck or improperly adjusted regulating valve

Excessive Fuel Consumption

Basic Engine Problem—See This Section
- Low compression
- Incorrect engine timing

Service Problem—See Section 10
- Engine overloaded

Fuel System Malfunction—See Section 30
- Leaks in fuel system
- Restricted air cleaners
- Faulty injection pump
- Faulty injection nozzles

Black or Gray Exhaust Smoke

Basic Engine Problem—See This Section
- Incorrect engine timing

Service Problem—See Section 10
- Improper grade of fuel
- Engine overloaded

Fuel System Malfunction—See Section 30
- Excessive fuel delivery
- Faulty injection nozzles
- Restricted air cleaners
- Defective muffler
- Defective turbocharger

Litho in U.S.A.

White Exhaust Smoke

Basic Engine Problem—See This Section
- Low compression

Fuel System Malfunction—See Section 30
- Faulty injection nozzles
- Improper fuel

Slow Acceleration

Fuel System Malfunction—See Section 30
- Faulty injection pump
- Faulty injection nozzles

Detonation

Basic Engine Problem—See This Section
- Carbon buildup in compression chambers

Fuel System Malfunction—See Section 30
- Oil picked up by intake air stream
- Faulty injection nozzles

Abnormal Engine Noise

Basic Engine Problem—See This Section
- Low engine oil level
- Excessive valve clearance
- Worn cam followers
- Bent push rods
- Worn rocker arm shafts
- Worn main or connecting rod bearings
- Foreign material in combustion chamber
- Worn piston pin bushings and pins
- Scored piston
- Incorrect engine timing
- Excessive crankshaft end play
- Loose main bearing caps
- Worn timing gears
- Worn oil pump gears
- Broken pump shaft
- Camshaft oil pump drive gear worn or broken

Contamination

Antifreeze in Crankcase Oil
- Loose cylinder head cap screws
- Cylinder head gasket failure
- Cylinder head or block damaged
- Cylinder liner packings or O-ring failure

Fuel in Crankcase Oil
- Faulty injection pump seals
- Faulty injection pump seals
- Faulty injection nozzles

Aluminum Particles in Oil Pan
- Scored pistons
- Main or connecting rod bearing failures

Brass Particles in Oil Pan
- Camshaft bushing failure
- Oil pump bushing failure
- Piston pin bushing failure

Sludge in Oil Pan
- Improper oil
- Improper maintenance
- Poor crankcase ventilation
- Faulty air cleaner assembly
- Antifreeze in crankcase

Litho in U.S.A.

Group 10
CYLINDER HEAD, VALVES, AND CAMSHAFT

GENERAL INFORMATION

The cylinder head holds the rocker arm assembly, valve springs, and valves.

Cylinder head valve seats have replaceable inserts. Valve guides are integral with the cylinder head. Exhaust valve guides are threaded.

Both intake and exhaust valves are equipped with valve rotators and valve stem wear caps. The exhaust valve is longer than the intake valve, and the intake valve has the letters "INT" stamped on the valve face.

The cam shaft is cast with an integral oil pump drive gear. All camshaft lobes are tapered and contact mushroom type cam followers.

DIAGNOSING MALFUNCTIONS

The following is a list of possible valve train malfunctions and causes:

Sticking Valves

Insufficient lubrication
Carbon deposits on valve stem
Worn valve guides
Warped valve stems
Cocked or broken valve springs
Worn or distorted valve seats

Warped, Worn, or Distorted Valve Guides

Lack of lubrication
Cylinder head distortion
Excessive heat
Unevenly tightened cylinder head cap screws

Distorted Cylinder Head and Cylinder Head Gasket Leakage

Excessive oil pressure
Improperly tightened cylinder head cap screws
Faulty gasket installation
Improper cylinder liner height above cylinder block

Worn or Broken Valve Seats

Excessive heat
Improper valve clearance
Improper valve timing
Misaligned valves
Distorted cylinder head
Carbon deposits on seats due to incomplete combustion
Valve spring tension too weak

Camshaft Failures

Scored camshaft lobes due to inadequate lubrication
Excessive end play due to thrust plate wear
Broken or warped camshaft due to improper timing

Burned, Pitted, Worn, or Broken Valves

Improper engine operation
Improper valve train timing
Insufficient cooling
Insufficient lubrication
Worn or distorted valve seats
Worn valve guides
Cocked or broken valve springs
Faulty valve rotators
Warped or distorted valve stems
"Stretched" valves due to excessive spring tension
Distorted cylinder head
Bent push rods
Carbon build-up on valve seats
Rocker arm failure

PRELIMINARY VALVE CHECKS

Check condition of visible valve train parts for indication of malfunctions.

Prior to cylinder head removal, inspect and check engine operation.

Checking Valve Clearance

Check valve clearance. Intake valve clearance should be 0.018 inch (0.46 mm). Exhaust valve clearance should be 0.028 inch (0.71 mm).

Litho in U.S.A.

Checking Valve Lift

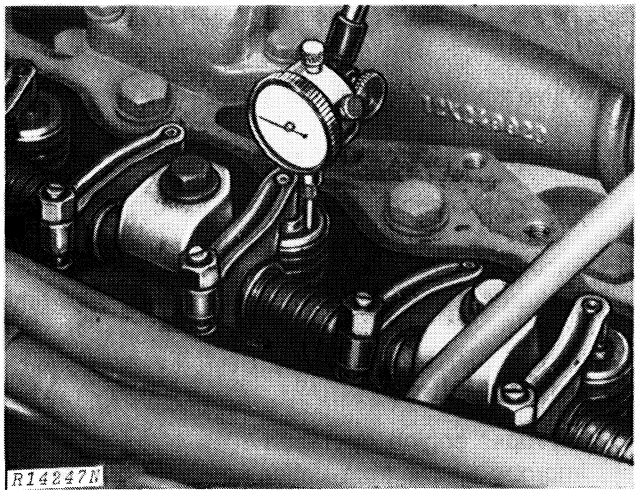

Fig. 1-Checking Valve Lift

Measuring valve lift can give an indication of wear to cam lobes, cam followers and push rods.

Set valve clearance to specifications.

Place dial indicator on rotator. Manually turn engine in running direction with JDE-81 Engine Rotation Tool. When rocker arm contacts valve stem, check dial indicator travel as rocker arm moves valve to full open. Indicator should read 0.4125 to 0.4425 inch (10.478 to 11.240 mm) on intake valve and 0.4135 to 0.4435 inch (10.503 to 11.265 mm) on exhaust valves.

CYLINDER HEAD AND VALVES

Removal

Remove battery ground straps.

The engine need not be removed to service the cylinder head. It will be necessary to remove parts that will interfere or be damaged if the cylinder head is removed.

Drain cooling system and relieve hydraulic pressure. Remove and identify parts for later reassembly.

NOTE: Do not rotate crankshaft with cylinder head removed unless all cylinder liners are secured with cap screws and washers.

Repair

Remove, plug, spring washers and washers from rocker arm shaft. Slide parts from shaft and identify for reassembly.

Remove valve spring retainer locks, valve springs, rotators and valves. Identify each valve for reassembly into the guide from which it was removed.

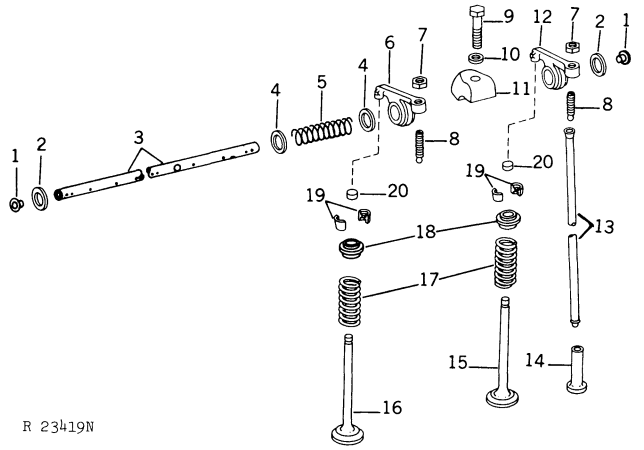

1—Plug (2 used)
2—Spring Washer (2 used)
3—Shaft
4—Washer (10 used)
5—Spring (5 used)
6—Rocker Arm (6 used)
7—Nut (12 used)
8—Screw (12 used)
9—Cap Screw (6 used)
10—Washer (6 used)
11—Clamp (6 used)
12—Rocker Arm (6 used)
13—Push Rod (12 used)
14—Cam Follower (12 used)
15—Exhaust Valve
16—Intake Valve
17—Spring (12 used)
18—Rotator (12 used)
19—Retainer (24 used)
20—Wear Cap (12 used)

Fig. 2-Valve Train

Valve Springs

Inspect valve springs for alignment, wear and damage. Place springs on a flat surface to see that they are square and parallel. Do not use springs that are cocked, crooked, broken, or rusty.

Check valve spring tension on a spring tester. Free length of each spring may differ, but compressed length for each spring must be the same.

The following are the specified compressed length of the springs;

compressed at	
54 to 62 lbs.—Valve closes	1.81 in.
(240.2 to 275.8 N)	(45.9 mm)
133 to 153 lbs.—Valve open	1.36 in.
(591.6 to 680.5 N)	(34.5 mm)

Valve Rotators

Inspect valve rotators. If rotators will not turn freely in one direction, replace with new.

Valve Face and Stem

Valve stem wear caps should be replaced if pitted or worn.

Check valve face and stem for wear or damage. See "Diagnosing Malfunctions" page 20-10-1 for causes of valve failures.

New valve specifications are as follows:

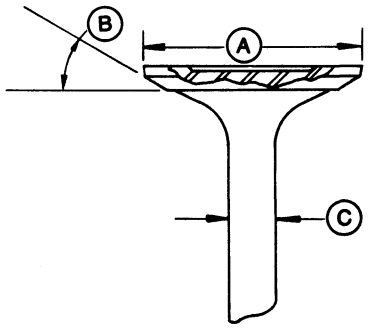

R 24202N

A—1.71 to 1.72 inch (43.43 to 43.69 mm)
B—29.5°
C—0.3715 to 0.3725 inch (9.436 to 9.461 mm)

Fig. 3-Valve Specifications

Compare valve stem O.D. (C, Fig. 3) with valve guide I.D. (B, Fig. 5) to determine stem-to-guide clearance.

For information on valve refacing, see "Basic Engine" in FOS Manual 30—ENGINES.

Valve Guides

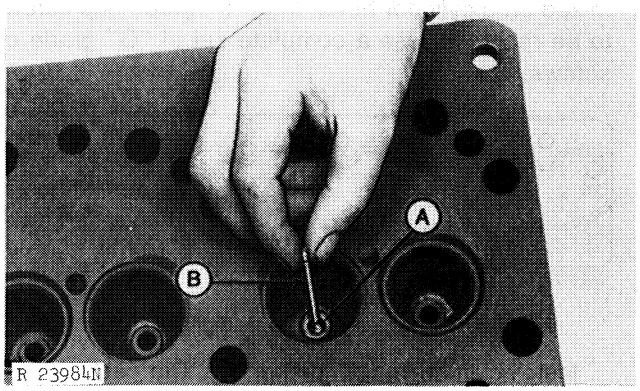

R 23984N

A—Valve Guide **B—Telescope Gauge**

Fig. 4-Checking Valve Guide

Measure valve guides (Fig. 3) for wear or damage. The I.D. of the guide (B, Fig. 5) in a new head is 0.3745 to 0.3755 inch (9.512 to 0.537 mm). Clearance between new guide and new valve stem is 0.0020 to 0.0040 inch (0.051 to 0.102 mm). Worn guides can allow a clearance of 0.0060 inch (0.1524 mm) and still be acceptable.

Worn guides can be knurled if they do not allow more than 0.0060 to 0.0080 inch (0.152 to 0.203 mm) clearance. Use knurling tool EXACTLY as directed by the manufacturer.

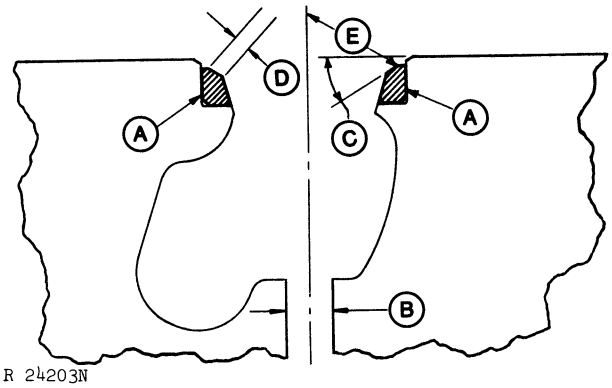

R 24203N

A—Valve Seat Insert
B—Valve Guide I.D.
C—Valve Seat Angle
D—Valve Seat Width
E—Valve Seat Run-Out

Fig. 5-Valve Seat Insert and Guide Specifications

Valve Seat Inserts

Check valve seats for cracks, pits, carbon deposits and excessive wear. Measure width and concentricity with valve guide. The width of the seat (D, Fig. 5) is 0.0830 to 0.0930 inch (2.108 to 2.362 mm). Runout between guide and seat (E) should be no more than 0.0020 inch (.051 mm). Valve seat angle (C) is 30°.

Repair or replace seats as necessary. Follow directions given in Chapter 2 of FOS Manual 30—ENGINES and those given by the manufacturer of a quality seat refacing tool.

If necessary, replace valve seat insert, using JDE-41296 Puller to pull insert.

Valve Guides—Continued

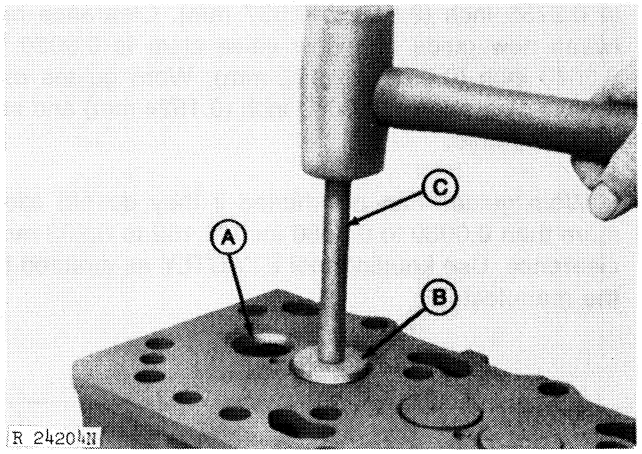

Fig. 6-Installing Valve Seat Inserts

Chill both new insert (A, Fig. 6) and JDE-79 Valve Seat Insert Driver (B) to −20°F (−29°C) in dry ice before installation. Use JDE-7 Driver (C) to drive insert and replacement ring into place.

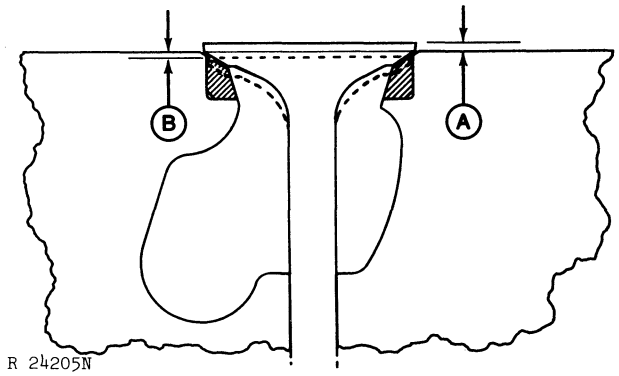

Fig. 7-Installed Valve Specification

The valve face is 0.0240 to 0.0380 inch (0.610 to 0.965 mm) above the head surface (protruded) (A, Fig. 7) with the valve closed in a new cylinder head. The valve face can be 0.0060 inch (0.1524 mm) below head surface (recessed) (B) and still be acceptable.

Rocker Arm Assembly

Examine rocker arms and rocker arm shaft for unusual signs of wear. Wear could indicate weak valve springs, bent push rods, or loose rocker arm shaft clamps. If rocker arms ends show only normal wear, resurface them.

If the rocker arm has been damaged by a valve failure, replace it and the push rod, when replacing valves.

Clean holes in rocker arms, rocker arm shaft, and rocker arm mounting brackets to insure proper lubrication of the rocker arm assembly.

Assembly

Assemble parts on rocker arm shaft in reverse of sequence removed. Position plugs correctly in each end of the rocker arm shaft.

Apply AR44402 Lubricant to valve stems and guides and install valves in guides from which they were removed. Valves must move freely and seat properly.

NOTE: New intake valve is marked with "INT" in the center of the face.

Install valve springs, making certain that cylinder head end of spring is located correctly in the machined counterbore of the head.

Install rotators (18, Fig. 2) and locks (19) on valves. "Pop" each valve three or four times with a soft mallet to insure proper positioning of the locks.

Installation

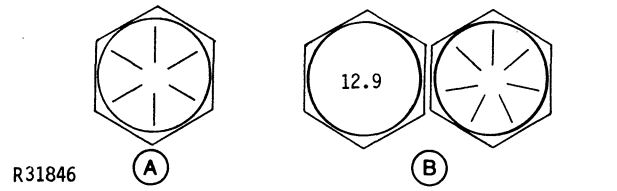

A—"F" Grade Cap Screws **B—"G" Grade Cap Screws**

Fig. 8-Cylinder Head Cap Screw Identification

Cylinder head cap screws on early 8430 Tractors are either of the "F" grade type or "G" grade type. "F" grade cap screws (A, Fig. 8) have six radial marks on the head. "G" grade cap screws (B) have either seven radial mards or 12.9 on the cap screw head. Since the "G" grade cap screws are to be torqued to a higher specification than the "F" grade cap screws (see below) it is important that the two types not be intermixed on a cylinder head. If an "F" grade cap screw is to be replaced, use a complete set of "G" grade cap screws.

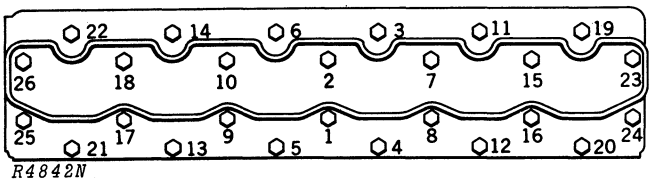

Fig. 9-Cylinder Head Cap Screw Tightening Sequence

Install cylinder head gasket dry. Dip cap screws in engine oil before installation. Install cylinder head, using hardened flat washer under all cap screws. Tighten cap screws evenly to 105 ft-lbs (142 Nm) following sequence shown in Fig. 9. Retighten "F" grade cap screws (A, Fig. 8) to 110 to 120 ft-lbs (149 to 163 Nm). Retighten "G" grade cap screws (B, Fig. 8) to 117 to 143 ft-lbs (158 to 193 Nm) using same sequence as used initially.

After engine assembly has been completed, follow break-in procedure given in Group 35 of this section. Retighten "F" grade cap screws to 125 to 135 ft-lbs (169 to 183 Nm). Retighten "G" grade cap screws to 135 to 165 ft-lbs (183 to 224 Nm). Use initial tightening sequence.

Install push rods in holes from which they were removed.

Install valve stem wear caps making certain caps rotate freely.

Install rocker arm assembly. Make sure that spring pin in head aligns with pin hole in rocker arm shaft. This will align lubricating holes in shaft and head. Tighten rocker arm shaft clamps to 45 to 65 ft-lbs (61 to 88 Nm) torque.

Valve Clearance Adjustment

Use JDE-81 Engine Rotation Tool Set to position No. 1 piston at "TDC" of its compression stroke. Turn flywheel until rotation tool timing pin engages timing hole in flywheel.

Valve clearance is 0.018 inch (0.4572 mm) on intake valves and 0.028 inch (0.7112 mm) on exhaust valves. Adjust valve clearance on No. 1, 3, and 5 exhaust valves and 1, 2, and 4 intake valves (Fig. 10).

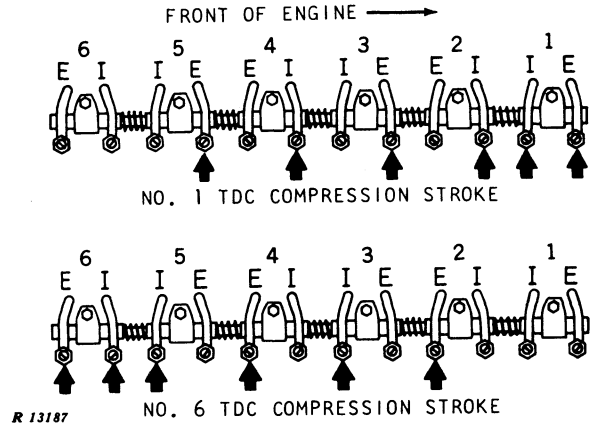

Fig. 10-Valve Clearance Adjustment

Rotate flywheel 360 degrees until No. 6 piston is at "TDC" of its compression stroke and tool timing pin engages flywheel timing hole.

Adjust valve clearance specifications on No. 2, 4, and 6 exhaust and 3, 5, and 6 intake valves.

Remove engine rotation tool set.

NOTE: Run engine for specified time and load. Retighten head and readjust valves.

CAMSHAFT

Removal

Disconnect battery ground straps.

Remove all parts as necessary to remove camshaft. The tractor front end should be separated from the engine. However, cylinder head removal is not necessary unless desired. If camshaft bushing removal is necessary, the engine should be removed and placed in D-01003AA JDST-32 Repair Stand using D-05001ST (JDG-13) Adapter Plates. Identify parts for reassembly.

NOTE: See Section 10, Group 25 for separation and removal instructions.

Remove crankshaft damper pulley as described in Group 20, of this section.

NOTE: Set No. 1 piston at "TDC" on compression stroke to align timing marks on crankshaft and camshaft gears. This will aid timing on reassembly.

Remove push rods. Use D-15001NU (ND425) Magnetic Holding Tool Set to hold cam followers away from camshaft if the cylinder head hasn't been removed or to remove followers if the head has been removed. If followers are removed, mark them for identification on reassembly.

Remove oil pan and oil pump.

Check camshaft end play before removing camshaft (2, Fig. 11). Place dial indicator on camshaft gear (6) and pry between gear and block. End play should be 0.0025 to 0.0085 inch 0.064 to 0.216 mm). Excessive end play indicates a worn thrust plate (4), however, end play to 0.0150 inch (0.381 mm) is allowable.

Remove four cap screws from thrust plate (4) and remove camshaft (2) from cylinder block.

Do not allow cam lobes to drag in bores when removing camshaft.

Repair

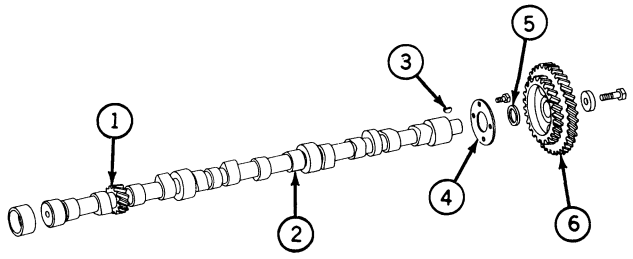

1—Oil Pump Drive Gear
2—Camshaft
3—Woodruff Key
4—Thrust Plate
5—Spacer
6—Camshaft Gear

Fig. 11-Camshaft Assembly

Thrust Plate

Check thrust plate for proper thickness. New part dimension is 0.1860 to 0.1890 inch (4.724 to 4.801 mm). Thrust plate wear of 0.1820 inch (4.623 mm) is acceptable. If thrust plate wear or camshaft end play is excessive, check camshaft lobes, journals and bushings for wear or damage.

Bushings

Check camshaft bushing journals and bushings for wear or damage. Journal O.D. is 2.3745 to 2.3755 inches (60.312 to 60.337 mm) on a new camshaft. New bushing I.D. is 2.3775 to 2.3795 inches (60.388 to 60.439 mm). However, a total 0.0060 inch (0.152 mm) clearance between the two is acceptable.

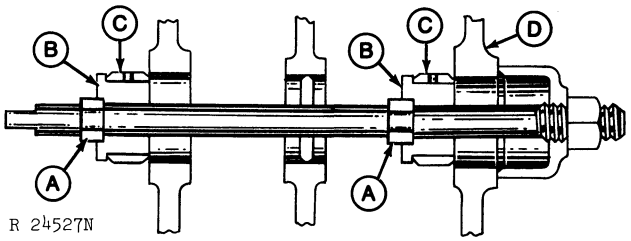

A—Tool Locking Key
B—Tool Mandrel
C—Camshaft Bushing
D—Engine Block

Fig. 12-Installing Camshaft Bushings

To remove and install camshaft bushings (Fig. 12), use JDE-6 Camshaft Bushing Replacement Set. The first two bushings can be reached from the front of the engine. The flywheel must be removed to reach the other two bushings from the rear of the engine.

When new bushings are installed, be sure that the elongated bushing oil holes are to the top and the round bushing oil holes are aligned with oil holes in the bottom of the bushing bore.

Gears and Lobes

Check camshaft lobes and oil pump drive gear (1, Fig. 11) for wear or damage. Replace camshaft if necessary. If camshaft is replaced due to a damaged oil pump drive gear, check gear and shaft on oil pump for damage and replace as necessary.

Check cam followers for damage. Replace as necessary.

Examine camshaft gear and injection pump gear for worn, or broken teeth and damage. If either gear must be replaced, both gears must be replaced as a matched set.

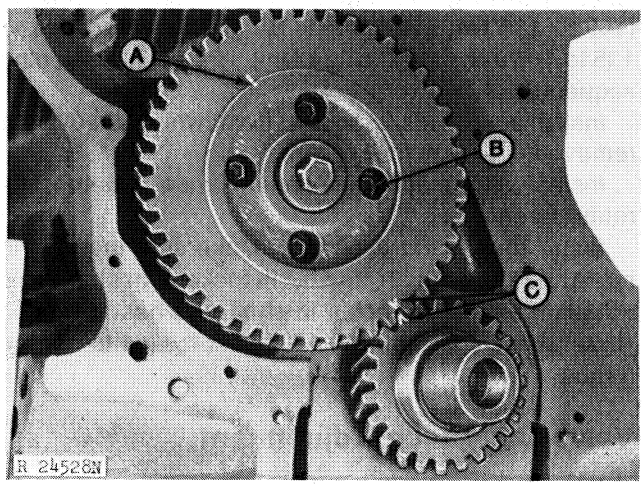

A—Location Mark
B—Thrust Plate Cap Screw
C—Timing Mark

Fig. 13-Gear Timing

Check camshaft gear for slippage between the two parts of the gear. If the location mark (A, Fig. 13) between the two parts has separated, replace the gear.

NOTE: Do not separate the injection pump drive portion of the camshaft gear from the outer portion.

Camshaft Assembly

To reinstall gear, install thrust plate and spacer. Support camshaft under first journal, install Woodruff key, and place gear on camshaft with timing mark facing away from camshaft. Press gear on until tight against camshaft shoulder.

Installation

If the cam followers have been removed, reinstall, using the magnetic holding tools to hold them away from the camshaft bore until camshaft is installed.

Coat camshaft with high temperature grease such as Texaco "Molytex Grease 0" or its equivalent and install camshaft in block.

See Section 30 for information regarding injection pump and injection pump drive gear installation.

With No. 1 piston on "TDC" of compression stroke, align timing marks (C, Fig. 13) on camshaft and crankshaft.

Use the following torque specifications for reassembly. Torque specifications for engine parts not covered in this group may be found in Group 35.

Location	Torque (ft-lbs)	Torque (Nm)
Oil pan 1/2" cap screws	85	115
3/8" cap screws	35	47
Cylinder head cover-to-cylinder head	20 to 25	27 to 34
Intake manifold-to-cylinder head	35	47
Intake manifold cover-to-intake manifold	20	27
Camshaft thrust plate	20	27
Camshaft gear	85	115
Damper pulley	150	203
Timing gear cover	30	41
Cylinder head—Initial	105	142
Second	110 to 120	149 to 163*
	117 to 143	158 to 193**
Final	125 to 135	169 to 183*
	135 to 165	183 to 224**
Rocker arm shaft clamp	45 to 65	61 to 88

**"F" Grade Cap screws*
***"G" Grade Cap screws*

Turn camshaft gear to align thrust plate holes with cylinder block holes. Secure thrust plate, washer, and cap screw in camshaft.

Check camshaft for 0.0025 to 0.0085 inch (0.064 to 0.216 mm) end play.

Install cylinder head, push rods, and timing gear cover. Tighten cylinder head as described on page 20-10-4.

Check injection pump timing and valve clearance. (See Section 30 for injection pump information.)

Install remaining tractor parts.

Glue rocker arm cover gasket on rocker arm cover and install.

Litho in U.S.A.

Group 15
CYLINDER BLOCK, LINERS, PISTONS AND RODS

GENERAL INFORMATION

The cylinder block is a one-piece casting equipped with seven main bearings.

The cylinder liners are wet-sleeve replaceable type. Each liner has a square rubber packing that seals at a shoulder on the liner. Two O-ring packings fit in grooves in the liner bore. The square and O-ring packings aid in sealing the liner at the bottom of the liner bore. The top of the liner is sealed by cylinder head gasket compression.

The pistons are forged aluminum alloy, cam ground, and weight controlled. Each has two compression rings of a keystone design and an oil control ring.

The piston pins fit into bronze bushings in the connecting rod. The connecting rod has replaceable bearing inserts.

DIAGNOSING MALFUNCTIONS

Scuffed or Scored Pistons

Contaminated oil
Improper break-in
Low oil level
Improper operation
Insufficient lubrication
Insufficient cooling
Improper piston-liner clearance
Insufficient ring gap
Coolant leakage in crankcase
Misaligned or bent connecting rod
Improperly installed piston
Incorrect connecting rod bearing clearance
Carbon buildup in ring groove
Worn piston
Distorted cylinder liner
Plugged piston cooling orifice

Worn or Broken Compression Rings and Grooves

Pre-detonation
Insufficient lubrication
Insufficient cooling
Improper ring installation
Improper combustion
Improper timing
Abrasives in combustion chamber
Failure to remove cylinder liner wear ridge (top ring)

Clogged Oil Control Ring

Improper oil
Excessive blow-by
Improper periodic service
Low operating temperature

Stuck Rings

Improper oil
Improper periodic service
Poor operating conditions
Coolant leakage in crankcase
Excessive cylinder liner taper

Cylinder Liner Wear and Distortion

Incorrectly installed compression rings
Insufficient lubrication
Uneven cooling around liner
Improper piston-liner clearance
Liner bore damage

Warped Cylinder Block

Insufficient cooling

Broken Connecting Rod

Inadequate piston-liner clearance
Distorted cylinder liner
Piston pin failure

Piston Pin and Snap Ring Failure

Misaligned connecting rod
Excessive crankshaft end play
Incorrect snap rings

Mottled, Grayish or Pitted Compression Rings

Internal coolant leaks

Dull Satin Finish and Fine Vertical Scratches on Rings

Dirt and abrasive in air intake system

Litho in U.S.A.

REMOVAL

Under normal conditions the engine need not be removed from the tractor to service pistons, rods, and liners. If engine removal is desirable, see Section 10, Group 25.

Drain the crankcase and remove oil pan and cylinder head.

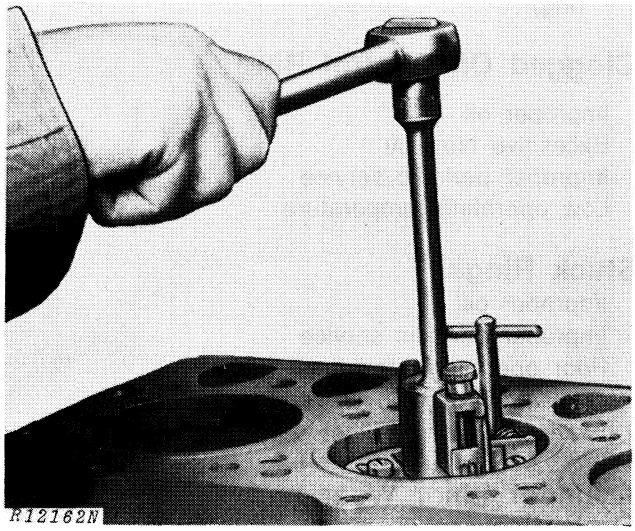

Fig. 1-Removing Ridge from Cylinder Liner Bore

Remove carbon or ridge from liner bore with a ridge reamer.

Do not rotate crankshaft with head removed unless liners are bolted down.

Keep bearing inserts with their respective rods and caps and mark rods, pistons, and caps to assure correct reassembly.

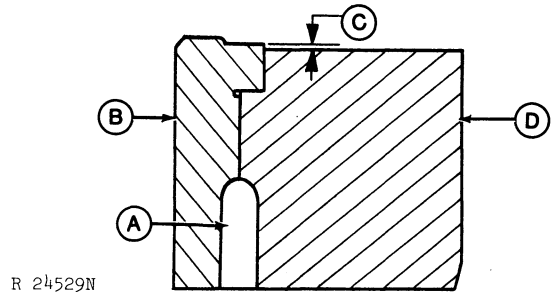

A—Water Passage
B—Cylinder Liner
C—Liner Height Specification
D—Cylinder Block

Fig. 2-Location of Cylinder Liner in Cylinder Block

Measure height (C, Fig. 2) of bolted down liner at several points before removal from cylinder block. Variations in height can give an indication of liner distortion or liner-piston problems. Height should be 0.000 to 0.004 inch (0.000 to 0.102 mm).

REPAIR

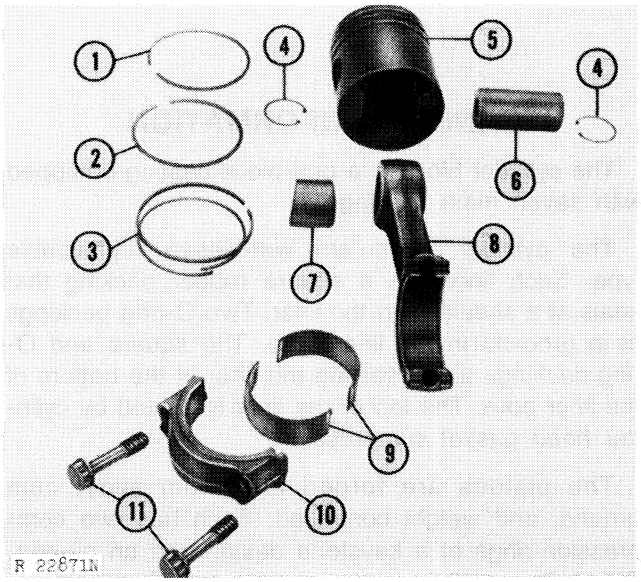

1—#1 Keystone Compression Ring
2—#2 Keyston Compression Ring
3—Oil Control Ring With Expander
4—Snap Ring
5—Piston
6—Piston Pin
7—Piston Pin Bushing
8—Connecting Rod
9—Bearings
10—Connecting Rod Cap
11—Special Cap Screw

Fig. 3-Piston and Connecting Rod Assembly

Pistons

Clean the pistons by using Immersion-Solvent "D-Part" and Hydra-Jet Rinse Gun or Glass Bead Blasting machine.

⚠ CAUTION: Follow manufacturer's instructions exactly. AVOID CONTACT OF CHEMICAL WITH YOUR SKIN OR EYES; chemical contains creosols which can be very harmful.

Using "D-Part" Cleaner

1. Follow manufacturer's directions for handling, mixing and use of cleaner.

2. Use a solvent to remove oil and grease from piston before soaking in cleaner.

3. One or two soakings may be required to loosen carbon and residue from piston.

4. IF NECESSARY, LIGHTLY scrape piston to remove some carbon. DO NOT scrape on piston skirt. Be VERY CAREFUL when scraping other parts of piston.

5. Thoroughly rinse piston with water and air after soaking.

Using Glass Bead Blasting Machine

1. Only an experienced operator should use a glass bead blasting machine to clean pistons. Follow manufacturer's directions.

2. Remove rings and wash piston in solvent to remove oil and grease. Use a stiff - BUT NOT A WIRE - brush to help loosen some carbon residue. Dry with compressed air.

3. Use the proper sized bead and correct pressure. Do not hold the bead blast in one area too long; keep the blast moving. The distance the blast nozzle is held away from the area will depend on the recommended pressure.

4. Avoid scratching the ring land area. Be sure ring grooves are thoroughly cleaned. Excessive deposits can force rings out, causing scuffing and scoring.

Piston Rings and Ring Grooves

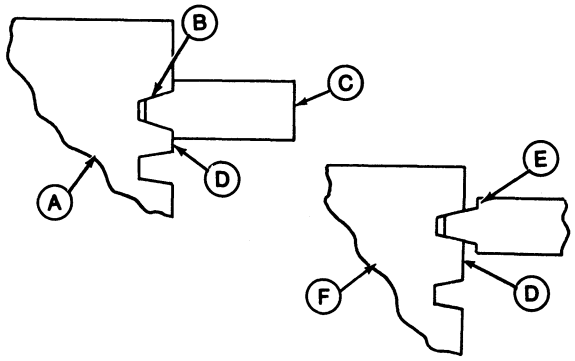

R 24201N

A—Piston with Worn Ring Groove
B—Keystone Ring Groove
C—Ring Groove Wear Gauge
D—Ring Land
E—Gauge Shoulder
F—Piston with Good Ring Groove

Fig. 4-Using Ring Groove Wear Gauge

Examine piston rings for damage, wear, scuffed, scored, or scratched conditions. Damaged rings can give an indication of malfunctions in other areas.

To check keystone ring grooves, use JDE-55 Ring Groove Wear Gauge. Gauge shoulders should not contact ring land of piston.

Oil control ring groove clearance can be checked by inserting new ring in groove and measuring clearance with a feeler gauge at several points. Oil control ring clearance should be 0.0024 to 0.0040 inch (0.061 to 0.102 mm) with a maximum of 0.0065 inch (0.165 mm) allowable.

Piston Head, Ring Lands, and Piston Skirt

Check piston for scuffing, scoring, or signs of overheating. (See "Diagnosing Malfunctions".)

Carefully examine piston head, ring lands, and skirt for signs of fatigue such as fine cracks in the head, bent or broken lands, or cracks around pin bore in the piston skirt.

Piston and cylinder liner are selectively fitted to maintain specified piston-to-liner clearance. The following specifications indicate that a "low" sized piston would be matched with a "low" sized liner and a "high" sized piston would be matched with a "high" sized liner.

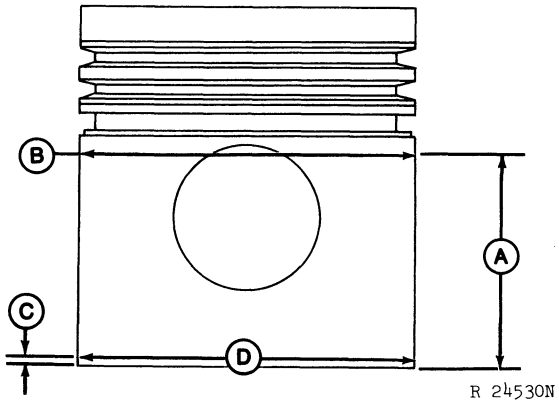

R 24530N

Fig. 5-Measuring Piston Skirt

Measure skirt at right angles to the piston pin bore (Fig. 5); the largest piston diameter. New piston skirt dimensions are as follows:

Location	Measurement
Top of Skirt (B, Fig. 5) (3.03 in. [77.0 mm] from bottom of piston) (A)	
"Low"	4.5525 to 4.5532 in. (115.634 to 115.651 mm)
"High"	4.5532 to 4.5539 in. (115.651 to 115.669 mm)

Piston Skirt—Continued

Bottom of Skirt (D, Fig. 5)
(0.09 in [2.28 mm] from bottom of piston) (C)
"Low" .....4.5575 to 4.5582 in.
(115.760 to 115.778 mm)
"High".....4.5582 to 4.5589 in.
(115.778 to 115.796 mm)

Cylinder Liners

Measure cylinder liner wear as follows:

1. Measure the liner bore parallel to the piston pin at the top end of ring travel (Fig. 6).

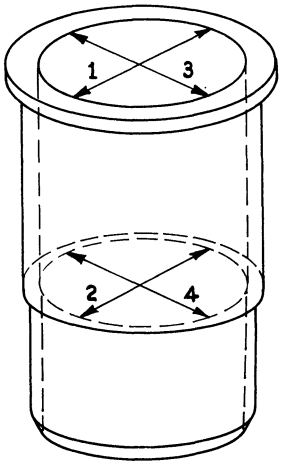

R15649N

Fig. 6-Cylinder Liner Dimension

2. Measure bore in same position at bottom end of ring travel.

3. Measure bore at right angle to piston pin at top end of ring travel.

4. Measure bore in same position at bottom end of ring travel.

Compare all four measurements to determine if liner has worn tapered. I.D. of a "low" sized liner is 4.5615 to 4.5625 inches (11.5862 to 11.5888 cm). I.D. of a "high" sized liner is 4.5625 to 4.5635 inches (11.5888 to 11.5913 cm). Maximum taper is 0.0020 inch (0.0508 mm) at ring land area.

Compare liner measurements with piston skirt diameters. Use the following specifications:

Top of skirt-to-liner .....0.0083 to 0.0100 in.
(0.2108 to 0.2540 mm)
Bottom of skirt-to-liner .....0.0036 to 0.0053 in.
(0.0914 to 0.1346 mm)

Deglazing Cylinder Liners

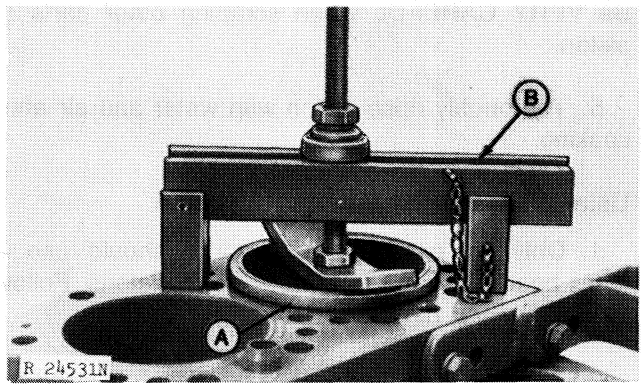

A—Cylinder Liner Flange **B—Removing Tool**

Fig. 7-Removing Cylinder Liner

Use D-01062AA (No. 974) Puller (Fig. 7) to remove liners for cleaning or deglazing. Place liners in a holding fixture while deglazing.

To deglaze liners, use D-17006BR Flex-Home, or a 180-grit deglazing tool or hone. Operate tool up and down to obtain a 45° crosshatch pattern.

After honing, thoroughly clean liners. First, wipe abrasive residue from liner walls with a dry rag. Then, swab out liner as many times as necessary with SAE-10W oil. Continue to clean liner until a clean white rag shows no discoloration.

IMPORTANT: Do not use gasoline, kerosene or commercial solvents to clean liners. Solvents will not remove all the abrasives from liner walls.

FOS

Refer to "Basic Engines" in FOS Manual 30—ENGINES, for information on deglazing cylinder liners.

Piston Pins

Measuring the piston pin, pin bore in piston, and connecting rod pin bushing can give an indication of excessive wear. However, checks should also be made for wear characteristics such as mis-alignment, taper or bellmouthing in pin bores.

Check pin for out-of-roundness by clamping a pin that is installed in connecting rod, in a vise (carefully). Rotate rod back and forth several times. Remove pin from vise and rod and check rod pin busing. Rod bushing should show shiny contact over the entire surface.

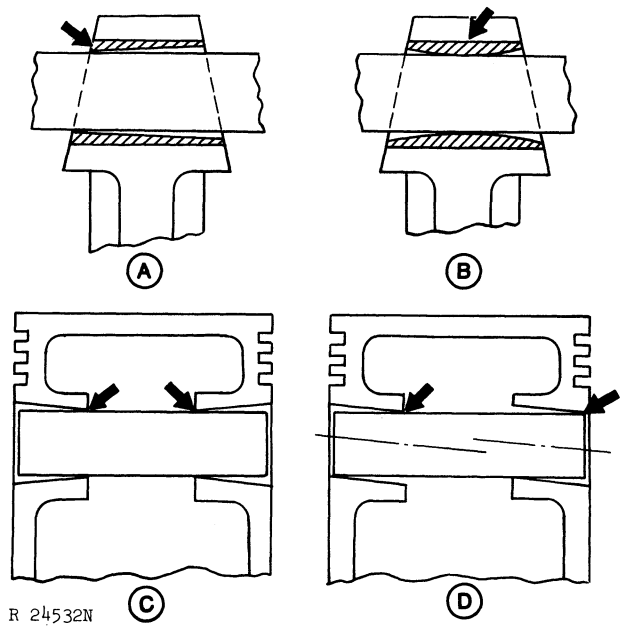

A—Tapered Rod Pin Bushing
B—Bellmouthed Rod Pin Bushing
C—Tapered Pin Bore
D—Mis-aligned Pin Bore

Fig. 8-Piston Pin Wear Failures

Insert pin from either side of the rod bushing. If it is free on one end but tight on the other, the bore could be tapered (A, Fig. 8). If it enters freely from both sides, but is tight in the center, the bore is bell-mouthed (B).

Check taper in piston pin bore by inserting pin from both sides. If pin enters freely, but binds in the center, bore could be tapered (C). If bore is not tapered, insert pin to check for bore alignment. Pin should not "click" or need to be forced into bore on opposite (D).

Specifications are as follows:

O.D. of piston pin	1.8739 to 1.8745 in. (47.597 to 47.612 mm)
I.D. of pin bore in piston	1.8748 to 1.8752 in. (47.620 to 47.630 mm)
I.D. of rod pin bushing	1.8752 to 1.8762 in. (47.630 to 47.655 mm)
Pin-to-bushing oil clearance	0.0007 to 0.0023 in. (0.0178 to 0.0584 mm)

Connecting Rods

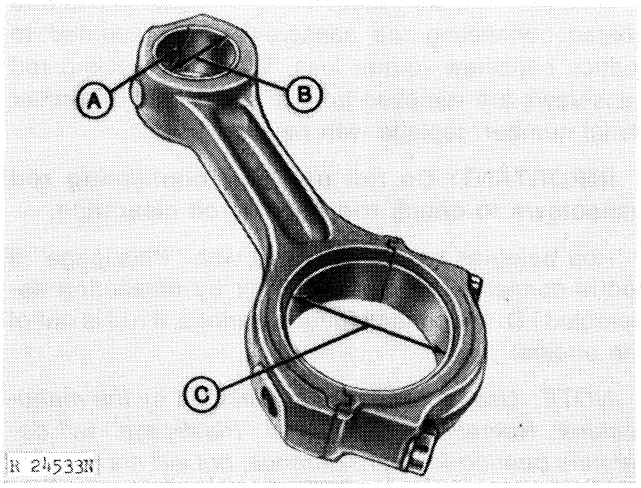

A—Pin Bushing Lubrication Hole
B—Pin Bushing Measurement
C—Bearing Insert Measurement

Fig. 9-Connecting Rod Pin Bushing and Bearing Measurement

Check the piston pin bushing in the rod for damage or excessive wear. Compare bushing I.D. (B, Fig. 9) with piston pin for specified clearance. (Also, see Figure 8.)

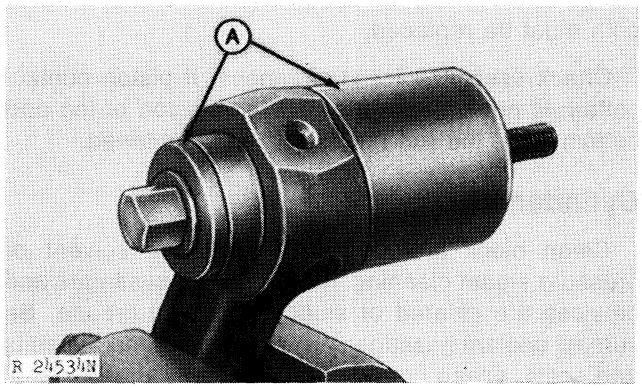

Fig. 10-Removing Pin Bushing

If necessary, remove failed bushing and install new bushing with JDE-98 Piston Pin Bushing Tool (A, Figs. 10 & 11). Be sure that bushing lubrication hole is aligned with hole in connecting rod (B, Fig. 11). Hone installed bushing to a "thumb" press fit with piston pin.

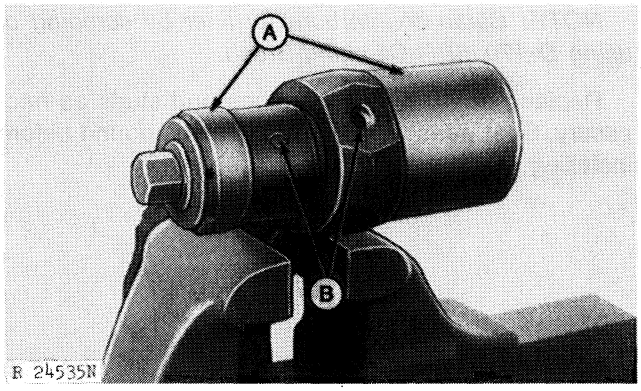

Fig. 11-Installing Pin Bushing

Connecting Rods—Continued

On 8430 Tractors (023874-) zink phosphate coated connecting rod capscrews were adopted to reduce capscrew torque loss. When connecting rod capscrews are removed from a tractor with an earlier serial number, replace with new.

IMPORTANT: Do not use new connecting rod capscrews to check rod bearing oil clearance.

Rod bearings can be checked with "Plastigage" if rod is connected to crankshaft, or by measuring assembled I.D. of connecting rod bearings, if rod is out of the engine.

NOTE: Use "Plastigage" as directed by the manufacturer. Remember, the use of "Plastigage" will determine bearing-journal clearance, but will not indicate which surface is worn or the condition of either surface.

The assembled I.D. of the bearing (Fig. 9) is 3.0005 to 3.0025 inches (76.212 to 76.263 mm). Measuring several places on the crankshaft rod journal, I.D. should be 2.9980 to 2.9990 inches (76.149 to 76.175 mm). Oil clearance is 0.0010 to 0.0040 inch (0.0254 to 0.1016 mm).

Rod and cap are an assembly; if one is damaged, both must be replaced.

Check assembly for straightness. If piston contact pattern is not centered on center of piston at top and bottom skirt, the rod needs to be straightened.

Cylinder Block

Clean block thoroughly with cleaning solvent or pressure steam cleaning. Make sure all passages and crevices are cleared of sludge, rust and grease. Be sure all coolant passages are cleaned of lime deposits and scale. Clean counterbore for liner flange.

See "Basic Engines" in FOS Manual 30-ENGINES for Cylinder Block cleaning instructions.

Inspect the block for cranks or damage. Cracks can in some cases, be repaired by the cold weld process.

NOTE: Clean counterbore for liner by scraping or using D-17015BR Cleaning Brush.

Replace dowel pins, pipe plugs and studs as necessary. Coat parts with joint sealing compound before installing.

Piston Cooling Orifices

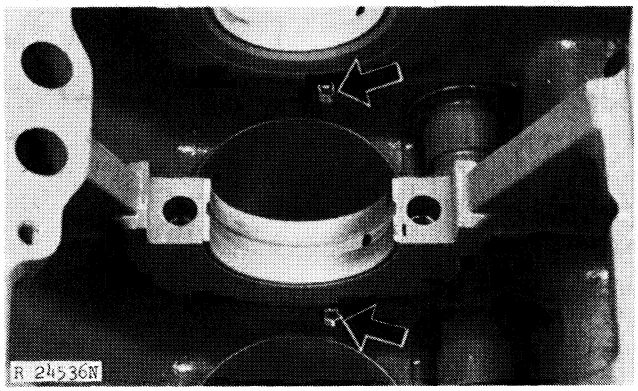

Fig. 12-Piston Cooling Orifice

Check each piston cooling orifice (Fig. 12) for plugged or damaged condition. An orifice failure could cause damage to pistons, piston pins, rod pin bushings, and liners. Replace orifices as necessary. Tighten to 85 to 110 in-lbs (9.60 to 12.43 Nm).

ASSEMBLY AND INSTALLATION

Liners

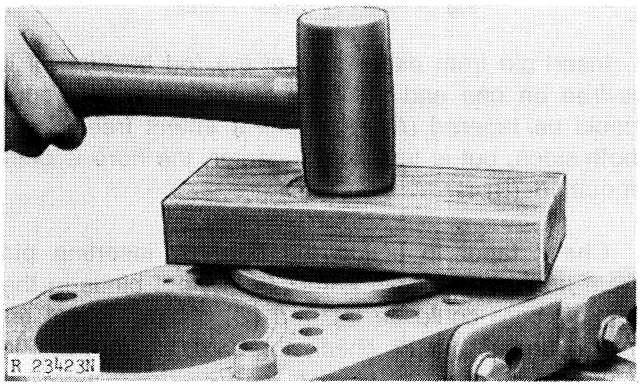

Fig. 13-Installing Cylinder Liner

Be sure liner bore in cylinder block is clean. First, install liner without O-rings and secure with cap screws and washers. Check liner height in several places.

If installation is in new cylinder block, the height of the liner should be 0.002-0.005 inches (0.051-0.127 mm).

If installation is in used cylinder block, the height of the liner should be 0.000-0.004 inches (0.000-0.102 mm).

NOTE: Install liner with the "L-L" or "H-H" mark toward the front of the engine.

Install O-rings in grooves in block and packing on cylinder liner. Apply AR54749 Lubricating Soap to O-rings and packing. Work liners in place by hand and seat with wood block and hammer (Fig. 13).

NOTE: Cylinder liner will protrude above the cylinder block more than normal due to uncompressed packing.

Piston and Rod Assembly

Be sure identification marks on piston and rod are in the same position as they were at time of disassembly.

Use a JDE-93 Ring Expander to install rings in their respective grooves. "Pip" marks on Nos. 1 and 2 rings face toward head end of piston.

NOTE: New rings are furnished with the correct end gap; therefore, fitting to the liner is not necessary.

Install expander in oil ring groove. Install the oil ring on the piston with the expander to the top of the piston. Position oil ring gap opposite expander gap.

Coat pistons, liners, and JDE-96 Ring Compressor with engine oil.

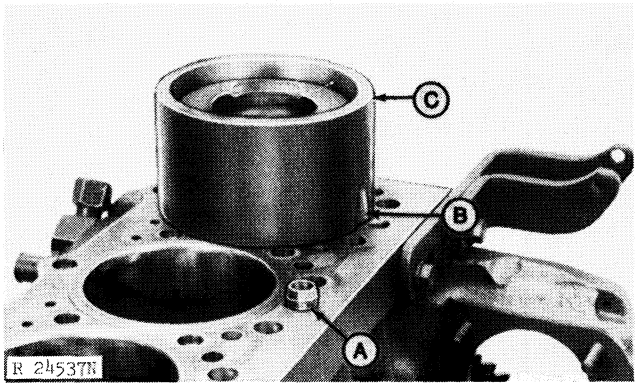

A—Hollow Dowel **C—Ring Compressor**
B—Groove

Fig. 14-Installing Piston

Stagger ring gaps on piston and carefully slide ring compressor over piston. Carefully place ring compressor, with piston and rod, over liner. With piston and rings centered and the words "front" on head of piston and rod facing front of engine, push piston into liner.

NOTE: A groove has been placed on the ring compressor (Fig. 14) to accommodate the hollow dowels in the cylinder block.

Apply engine oil to bearing inserts and crankshaft rod of journals. Small tangs on each half of the inserts fit in recesses in rod and cap.

Use new cap screws when installing connecting rod caps, and tighten using the torque-turn method (see below).

a) Install and tighten cap screws evenly to 55 ft-lbs (75 Nm) (7.5 kgm).

b) Turn each cap screw an additional 1/4 turn (90 + 10-0 degrees).

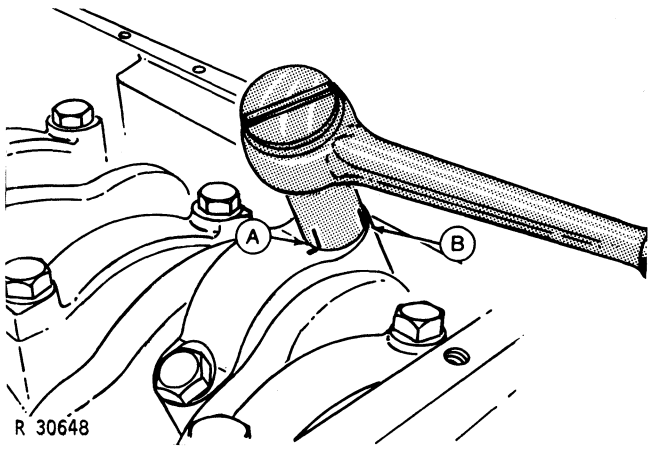

A—Reference Mark **B—90 Degree Mark**

Fig. 15-Torque-Turn Method of Tightening

NOTE: To ensure that the full 1/4 turn is accomplished, the following procedure can be used.

c) After tightening cap screws to 55 ft-lbs (75 Nm) (7.5 kgm), mark the connecting rod cap and socket (A, Fig. 15).

d) Make a second mark on the socket (B) 90 degrees counterclockwise from the first mark.

e) Turn 1/4 turn (90 degrees) clockwise until mark (B) is in line with reference mark on cap. This ensures 90 degree rotation of the socket instead of the wrench handle.

Rotate crankshaft several revolutions to be sure there is no binding of parts.

Reverse access steps for reassembly of remaining parts.

Litho in U.S.A.

Group 20
CRANKSHAFT, MAIN BEARINGS AND FLYWHEEL

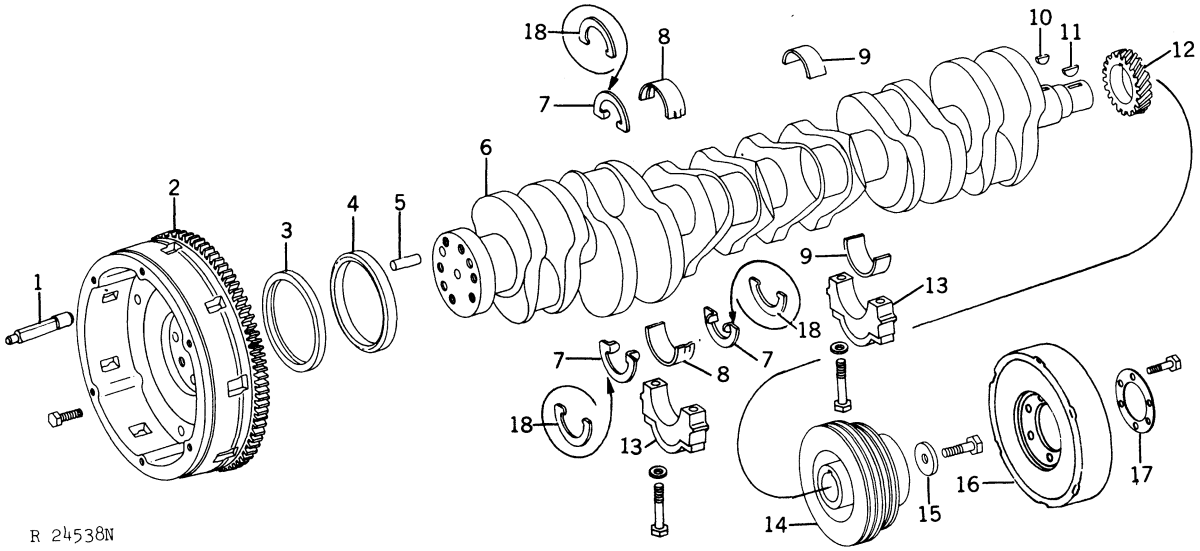

1—Pin
2—Flywheel with Ring Gear
3—Rear Crankshaft Oil Seal
4—Rear Crankshaft Wear Sleeve
5—Dowel Pin
6—Crankshaft
7—Thrust Bearing Washers*
8—Main Thrust Bearing Inserts (1 pair used)
9—Main Bearing Inserts (6 used)
10—Woodruff Key
11—Woodruff Key
12—Crankshaft Gear
13—Main Bearing Caps (7 used)
14—Damper with Pulley
15—Washer
16—Damper
17—Plate
18—Thrust Bearing Washers**
***Early Model**
****Later Model**

Fig. 1-Crankshaft Assembly

GENERAL INFORMATION

The crankshaft is a dynamically balanced one-piece steel forging. It is supported in the block by seven main bearings that have replaceable steel-backed inserts.

The crankshaft end thrust is absorbed by the third main bearing from the rear. The main thrust bearing is of a unique design, having two replaceable inserts, plus three replaceable thrust washer flanges that fit in notches in the inserts. The thrust washer flanges then absorb the crankshaft thrust.

The crankshaft is cross-drilled through connecting rod and main bearing journals for pressure lubrication to all journals from the pressure oil gallery in the cylinder block.

DIAGNOSING MALFUNCTIONS

Bearing Insert and Crankshaft Journal Failures

Scored or Galled Surfaces
- Excessive heat
- Poor periodic service
- Fuel in lubricating oil (incomplete combustion)
- Coolant in lubricating oil (cracked block or liner seal failure)
- Insufficient bearing oil clearance
- Wrong bearing insert size
- Bearing inserts and crankshaft journals not lubricated prior to engine operation
- Cylinder block oil passages blocked
- Bearing inserts incorrectly installed (oil hole in cap or crankshaft journal blocked)
- Lubrication system failure

DIAGNOSING MALFUNCTIONS—Continued

Corroded or Pitted Surfaces

Extreme oil temperature
Improper operation
Excessive blow-by
Contaminated oil (dirt, metal particles, etc.)
Improper periodic Service

Inconsistant Wear Pattern

Misaligned or bent connecting rod
Warped or bowed crankshaft
Tapered crankshaft journals

Cracked, Chipped, or Broken Bearing Inserts

Improper operation (overspeeding, excessive idling, lugging, etc.)
Excessive oil clearance
Improper installation
Excessive heat

Broken Main Bearing Caps

Low oil pressure
Low oil level
Improper installation (improper torque, etc.)
Dirt or metal particles between insert and journal
Lubrication system failure

Cracked or Broken Crankshaft

Improper operation (overspeeding, etc.)
Misaligned main bearing bores
Broken main bearing caps
Defective damper assembly
Loose flywheel
Improper engine usage (added belt pulleys, couplings)

REMOVAL

To inspect and repair crankshaft, main bearings, and flywheel, engine must be removed from the tractor. (See Section 10, Group 25 for removal instructions.)

After removing, install engine in D-01003AA (JDST-32) Engine Repair Stand. Use D-05001ST (JDG-13) Engine Brackets to attach engine to stand.

Checking Crankshaft End Play

Prior to engine disassembly, check crankshaft end play. Excessive end play can give an indication of worn thrust bearing washers. Too little end play can be the result of misaligned thrust bearing washers or contaminants between washers and crankshaft throw.

Use the following procedure:

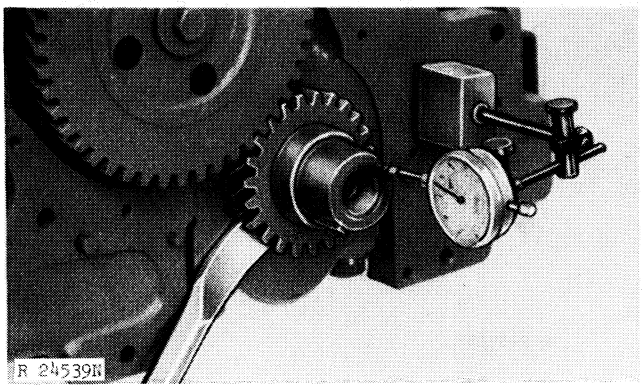

Fig. 2-Checking Crankshaft End Play

1. Place a dial indicator on end of crankshaft.

2. Move the crankshaft against and away from the dial indicator. Use care to prevent damage to main bearings, timing gear cover, or damper.

3. New part end play should be 0.0015 to 0.0155 inch (0.038 to 0.394 mm). If end play is not within specifications, examine crankshaft and main bearing thrust washers.

Disassembly

Remove clutch assembly.

Remove flywheel.

Remove oil pan and oil pump.

Remove rear crankshaft oil seal housing.

Remove connecting rods caps.

Remove damper-pulley assembly and timing gear cover.

INSPECTION AND REPAIR

Flywheel

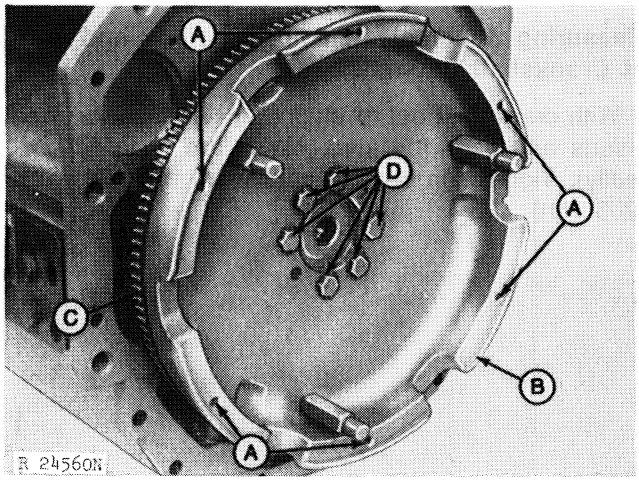

A—Clutch Mounting Holes
B—Flywheel
C—Ring Gear
D—Crankshaft Mounting Holes

Fig. 3-Flywheel Assembly

Check flywheel for cracks or damage, particularly around clutch mounting (A, Fig. 3) and crankshaft mounting (D) holes. Replace flywheel as necessary.

Examine flywheel ring gear (C) for chipped or broken teeth. Ring gear is usually removed from flywheel only if the gear needs to be replaced. Place flywheel on a solid flat surface and drive ring gear off with a brass drift and hammer.

⚠ CAUTION: Oil fumes or oil can ignite above 380°F (193°C). Use a thermometer and do not exceed 360°F (182°C). Do not allow a flame or heating element to be in direct contact with the oil. Heat the oil in a well-ventilated area. Plan a safe handling procedure to avoid burns.

To install new ring gear, heat to 300°F (148°C) using either heated oil, dry oven heat, or flame heat (if flame heat is used, be sure gear is heated uniformly around circumference). DO NOT OVERHEAT. SEE CAUTION. Also, overheating may destroy original heat treatment of gear.

Tap heated gear into place against flywheel shoulder. Be sure that gear circumference is against shoulder.

Clutch Shaft Pilot Bushing Adapter

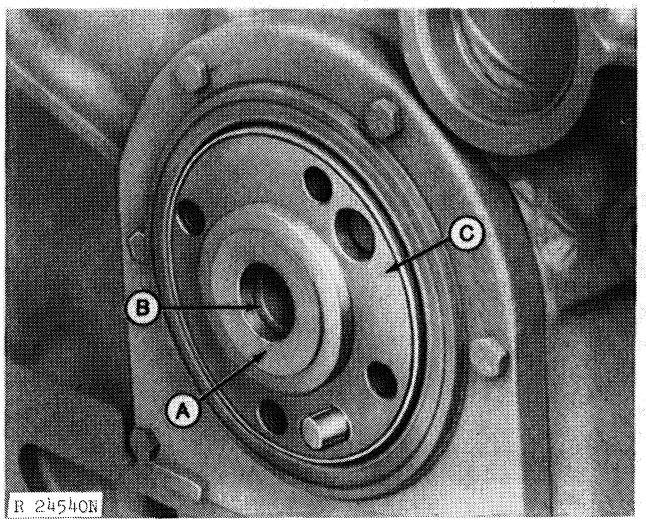

A—Clutch Shaft Pilot Bushing Adapter
B—Groove
C—Crankshaft Flange

Fig. 4-Clutch Shaft Pilot Bushing Adapter

Check clutch shaft pilot bushing (F, Fig. 5) and end of clutch shaft for wear. Bushing I.D. is 1.0025 to 1.0055 inches (25.463 to 25.540 mm). O.D. of shaft at bushing is 0.9995 to 1.0005 inches (25.387 to 25.413 mm).

If bushing or adapter (A, Fig. 4) removal is necessary, use D-01061AA (No. 954) Blind-Hole Puller Set. The bushing must be removed first to expose groove (B, Fig. 4) in adapter.

Installing Adapter and Bushing

To install new adapter (A, Fig. 4), push crankshaft against main thrust bearing. Drive adapter in until it is against the crankshaft flange (C). Take care not to damage the face of the adapter.

NOTE: If possible, to avoid damage to main thrust bearing washers, install adapter when crankshaft is out of the engine.

Drive in new bushing (F, Fig. 5) until it is flush to .020 inch (.508 mm) below the face of the adapter (E).

REAR CRANKSHAFT OIL SEAL, HOUSING AND WEAR SLEEVE

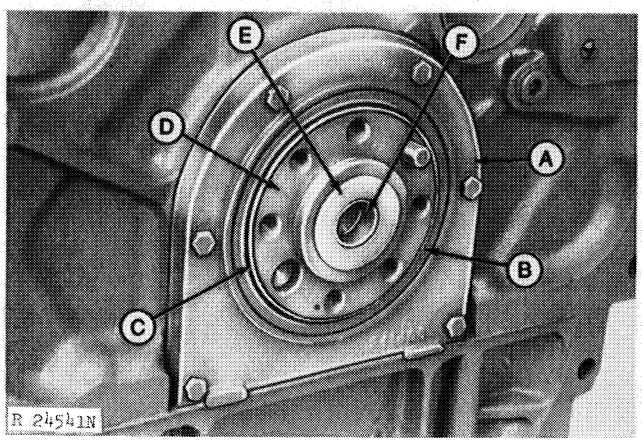

A—Oil Seal Housing
B—Oil Seal
C—Wear Sleeve
D—Crankshaft Flange
E—Bushing Adapter
F—Bushing

Fig. 5-Rear Crankshaft Assembly

Examine rear crankshaft oil seal (B, Fig. 5) and oil seal housing bore (A) for signs of damage or leakage. Also, be sure that correct oil seal has been used. An incorrect oil seal could set up a "pumping" action that could transfer clutch housing oil into the engine oil pan. Check oil seal housing for cracks or damage that could cause leakage.

Check wear sleeve (C) for damage, scoring, nicks, or burrs that could cause leakage. If necessary to remove sleeve, score LIGHTLY with a dull chisel. Do NOT score too deeply, or crankshaft flange (D) could be damaged.

Inspect the crankshaft flange for burrs or nicks. If necessary, clean flange with light file and fine emery cloth.

Main Bearings

A drop in oil pressure, excessive oil consumption, engine knock, or excessive crankshaft end play are indications of main bearing and main thrust bearing washer failures.

Remove main bearing caps and examine main bearing inserts for excessive wear, scoring, or damage. See possible causes of main bearing failure provided in "Diagnosing Malfunctions".

NOTE: Main bearing caps are numbered for reassembly on the same numbered main bearing bosses. Identify bearing inserts for comparison with crankshaft journals.

Main bearing oil clearance can be determined by measuring the assembled I.D. of bearings and O.D. of crankshaft journals or with the use of "Plastigage".

Measuring Assembled I.D. of bearings and O.D. of Crankshaft Journals

With crankshaft out of engine, install main bearing inserts and caps (be sure inserts are installed correctly). Tight main bearing cap screws to 150 ft-lbs (203 Nm).

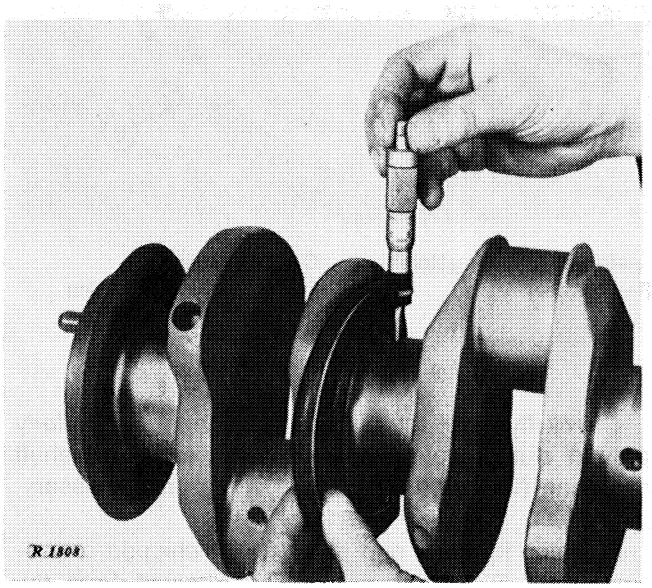

Fig. 6-Measuring Crankshaft Journal

Measure bearing I.D. Measure crankshaft journal O.D. at several points around journal. Compare the two measurements with the following specifications:

O.D. of main bearing journal	3.3720 to 3.3730 in. (85.649 to 85.674 mm)
I.D. of main bearing (assembled)	3.3742 to 3.3762 in. (85.705 to 85.755 mm)
Clearance	0.0022 to 0.0042 in. 0.0077 in. max. (0.0508 to 0.1067 mm) (0.1956 mm - max.)

NOTE: If engine had previous major overhaul and undersized bearing inserts were used, above listed I.D. and O.D. dimensions may not be the same as those recorded. However, oil clearance should be within specifications.

Measuring Clearance With "Plastigage"

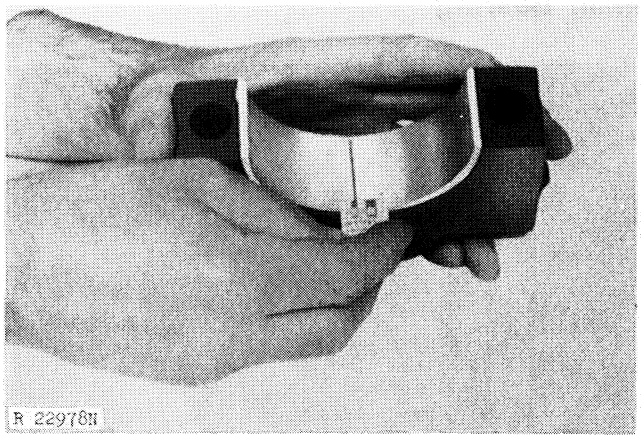

Fig. 7-Determining Main Bearing Clearance

Remove main bearing cap and place a strip of "Plastigage" in the center of the cap (about 3/4 of the width of the bearing). Install cap and tighten to 150 ft-lbs (203 Nm).

Remove the cap and compare the width of "Plastigage" with scale provided on side of package to determine clearance. Clearance should be as specified.

If oil clearance is not within specifications, but crankshaft journals show only even wear, dress journals and select the proper undersize bearing inserts. Undersize inserts are available in 0.002, 0.010, 0.020, and 0.030 inch (0.05, 0.25, 0.50, and 0.75 mm) sizes.

NOTE: If undersize bearings are used, check bearing clearance after bearing caps have been tightened to specified torque. If undersize bearings are too tight and clearance is not within specifications, the journal and bearing will be wiped clean of oil, resulting in premature wear on parts.

Crankshaft Journals

Use crankshaft journal O.D. measurements to determine if journal is out-of-round or has worn tapered. See following specifications:

Journal taper per inch of
journal length .....0.0001 in. (0.0025 mm)
Journal out-of- roundness...0.0040 in. (0.102 mm)

If journals have worn tapered or out-of-round or are scored or damaged, the crankshaft should be ground and proper undersize bearing inserts should be installed.

IMPORTANT: Crankshaft grinding should be done ONLY by experienced personnel on equipment capable of maintaining crankshaft size and finish specifications.

Thrust Bearing Washers

Examine crankshaft thrust surfaces and thrust bearing washers for excessive wear or damage.

If crankshaft end play is excessive, dress thrust surfaces and install new regular size or oversize thrust bearing washers. End play should be 0.0015 to 0.0155 inch (0.038 to 0.394 mm).

Examine crankshaft to be sure that cross-drilled lubrication passages are properly plugged.

Check piston cooling orifices to be sure they are tight and not plugged or damaged.

Damper and Damper Pulley

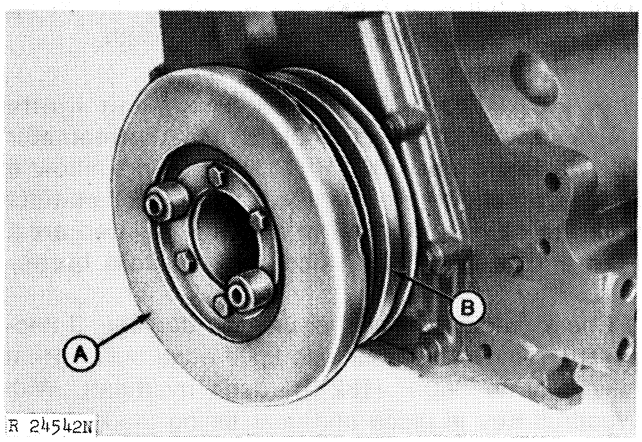

A—Damper **B—Damper with Pulley**

Fig. 8-Damper Assembly

Examine damper assembly for signs of eccentricity, wobble, or damage at attaching points. If damper has failed, check crankshaft for cracks or defects.

The damper assembly is not repairable and should be replaced, regardless of condition, at time of major engine repair.

Carefully remove damper assembly. DO NOT strike with hammer during removal or installation. When installing, be sure that damper is secure on the crankshaft before tightening cap screws to 150 ft-lbs (203 Nm) torque.

FRONT OIL SEAL, WEAR SLEEVE AND CRANKSHAFT GEAR

Check front crankshaft wear sleeve (Fig. 8) and oil seal for damage or leaking.

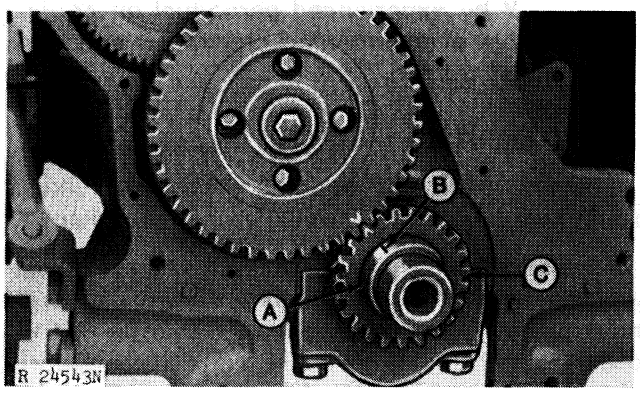

A—Front Crankshaft Wear Sleeve
B—Score Lightly
C—Crankshaft Gear

Fig. 9-Remove Front Wear Sleeve

To remove wear sleeve, score LIGHTLY with a dull chisel. Do NOT score too deeply. Inspect crankshaft flange for burrs or nicks. If necessary, clean up flange with a light file and fine emery cloth.

⚠ CAUTION: Oil fumes or oil can ignite above 380°F (193°C). Use a thermometer and do not exceed 360°F (182°C). Do not allow a flame or heating element to be in direct contact with the oil. Heat the oil in a well-ventilated area. Plan a safe handling procedure to avoid burns.

Check crankshaft gear for wear or damage. If necessary, remove old gear with knife edge puller. Heat new gear to 360°F (182°C) (don't overheat). With Woodruff Key in place and gear timing mark visible, place the gear on the crankshaft. Seat with JDH-7 Driver.

INSTALLATION

Main Bearing

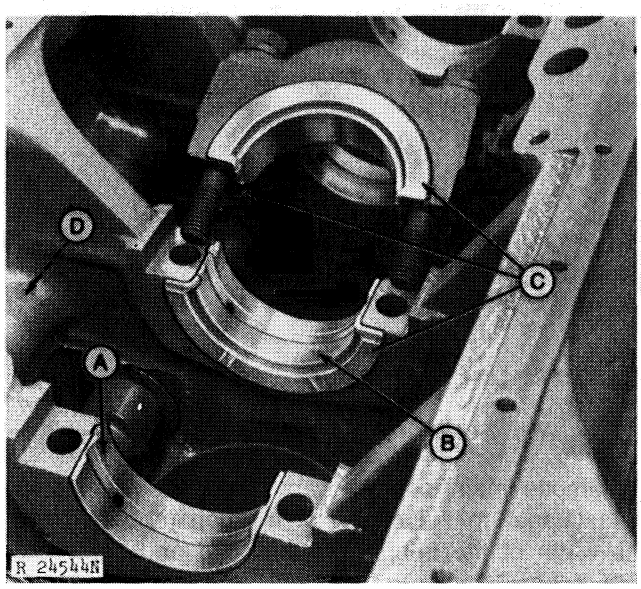

A—Main Bearing Insert
B—Main Thrust Bearing Insert
C—Thrust Bearing Washers
D—Rear of Engine

Fig. 10-Main Bearing Installation (Early Model Engine)

Install main bearing inserts as shown in Fig. 10. Be sure thrust bearing insert is installed in correct bore. Make sure the tangs on all bearings hit recesses in bores and that oil holes line up with oil passages in block.

NOTE: For parts and on later model engines, the oil hole in the upper half of the main bearing insert is elongated for easier alignment with block oil passages.

On early models, if thrust bearing inserts and thrust bearing washers are re-installed, use Fig. 10 for assembly reference. Note that upper washer is different and is placed on the rearward side of the thrust bearing bore.

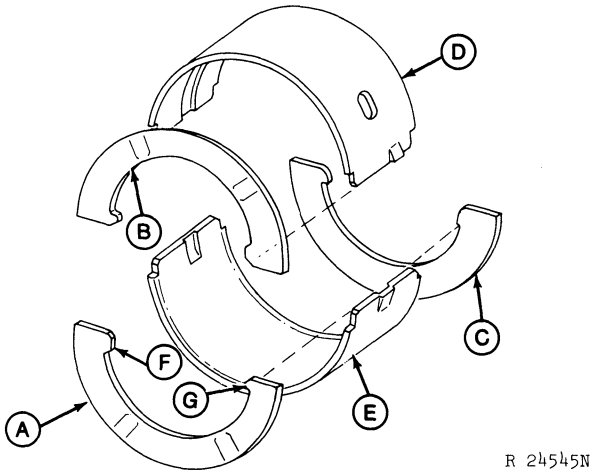

A—Lower Rear Thrust Bearing Washer
B—Upper Rear Thrust Bearing Washer
C—Lower Front Thrust Bearing Washer
D—Main Bearing Fillet Thrust Bearing
E—Main Bearing Cap Thrust Bearing
F—Large Tang
G—Small Tang

Fig. 11-Thrust Bearing and Washer Installation (Later Models)

If new thrust bearing inserts or thrust bearing washers are installed on early model engines, they must be installed as a set. Install new inserts and washers as shown in Fig. 10.

NOTE: Later model oversize thrust bearing washer sets contain one regular size washer and two 0.007 inch oversize washers. The regular size washer is installed on the front side of the main thrust bearing cap.

Apply a film of clean light oil to bearing surfaces and to crankshaft main bearing journals.

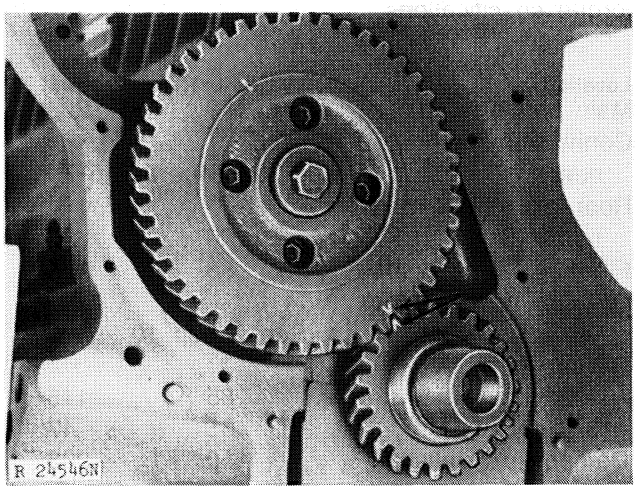

Fig. 12-Aligning Timing Marks

Install crankshaft and align crankshaft and camshaft gear timing marks (Fig. 12).

Install each bearing cap with the recesses and tabs facing the same side of the engine as those on the respective upper bearings in the block. Also make sure bearing caps are installed on the bearing bosses from which they were removed. The numbers stamped on the caps should be on the same side as the numbers on the block and in the same sequence.

Before tightening cap screws on main bearing caps, align upper and lower thrust flanges on main thrust bearings. Tap the crankshaft to the rear and then to the front to line up the flanges. Tighten main bearing cap screws to 150 ft-lbs (203 Nm) torque.

Rear Oil Seal, Wear Sleeve, and Housing

NOTE: If the crankshaft flange was filed, use a LIGHT coat of Permatex on the flange before installing wear sleeve. Be sure that excess Permatex is removed and no Permatex comes in contact with new oil seal.

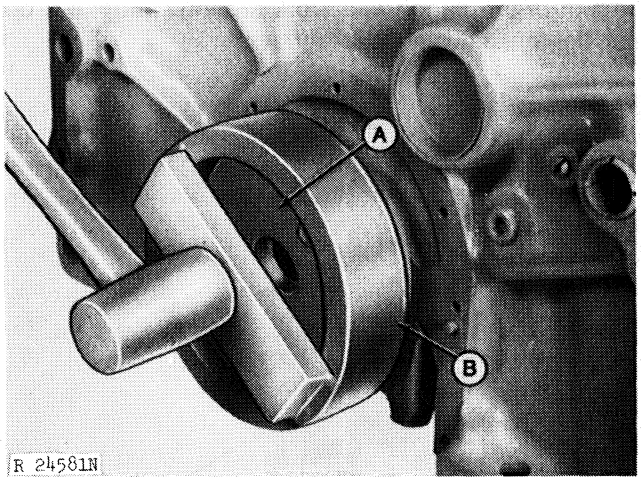

A—Guide **B—Driver**

Fig. 13-Installing Wear Sleeve

1. Install JDE-106-1 Guide on the crankshaft flange. Slide the wear sleeve onto the guide with O.D. chamfer toward the rear of the tractor. Drive the sleeve onto the flange with JDE-106-2 Driver until driver bottoms on the guide. Remove guide.

Litho in U.S.A.

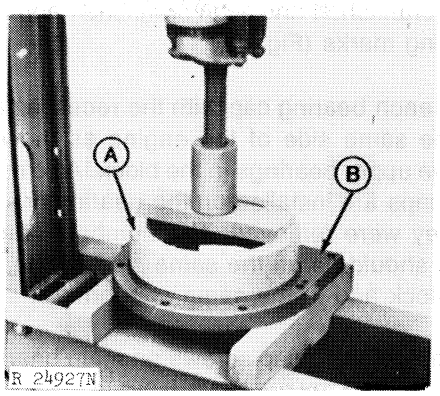

A—Driver **B—Oil Seal Housing**

Fig. 14-Installing Oil Seal

2. Support the oil seal housing as close to the seal bore as possible. Start seal by hand, then press in with JDE-106-2 Driver until driver bottoms on the housing flange. Spring side of seal should be away from flange side of housing.

3. Lubricate seal lip with engine oil and carefully work seal and housing over wear sleeve. Start at the bottom of the flange and work around. Snug, but do not tighten, housing cap screws.

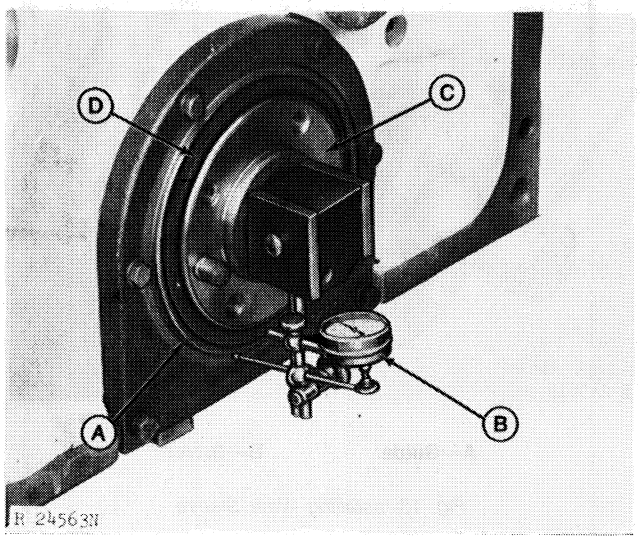

A—O.D. of Oil Seal Housing Flange
B—Dial Indicator
C—Crankshaft Flange
D—Oil Seal

Fig. 15-Checking Oil Seal Run-Out

Attach a dial indicator base to the crankshaft flange (Fig. 14). Locate the dial indicator on the O.D. of the oil seal housing flange. Turn the crankshaft and check housing bore run-out. Lightly tap the housing to bring into 0.0060 inch (0.1524 mm) maximum runout. Tighten cap screws to 20 ft-lbs (27 Nm) torque.

Front Oil Seal and Wear Sleeve

Coat I.D. of new wear sleeve with joint sealing compound and drive sleeve onto flange with JDE-3 Driver.

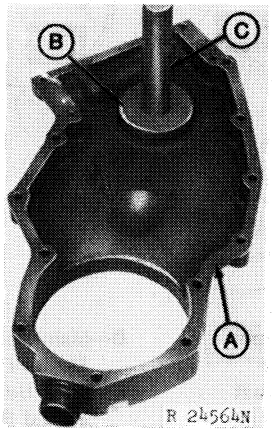

A—Timing Gear Cover **B—Oil Seal** **C—Driver**

Fig. 16-Installing Front Oil Seal

Install new front oil seal (Fig. 16) with spring side of seal facing the engine. Support timing gear cover around seal bore and press seal in with disk No. 27522 and No. 27537 of No. 27797 Bushing Driver Set. Closed side of seal should be 0.33 inch (8.382 mm) from front of cover. Lubricate seal before installing cover on engine.

Pistons, Connecting Rods, Oil Pump

Install pistons, connecting rods, oil pump, oil pan, flywheel, and clutch pack.

Use the following torque specifications to install parts covered in this group. See Group 35 for other torque specifications.

Location	Torque (ft-lbs)	(Nm)
Main bearing caps	150	203
Connecting rod bearings	See page 20-15-7	
Rear crankshaft oil seal housing	20	27
Flywheel to crankshaft	85	115
Cylinder head-to-block (in sequence)	See Group 10	
Oil pan-to-block—		
1/2 in.	85	115
3/8 in.	35	47
Damper-to-crankshaft	150	203

Install remaining engine parts and install engine in tractor.

Fill crankcase and cooling system.

Group 25
LUBRICATION SYSTEM

GENERAL INFORMATION

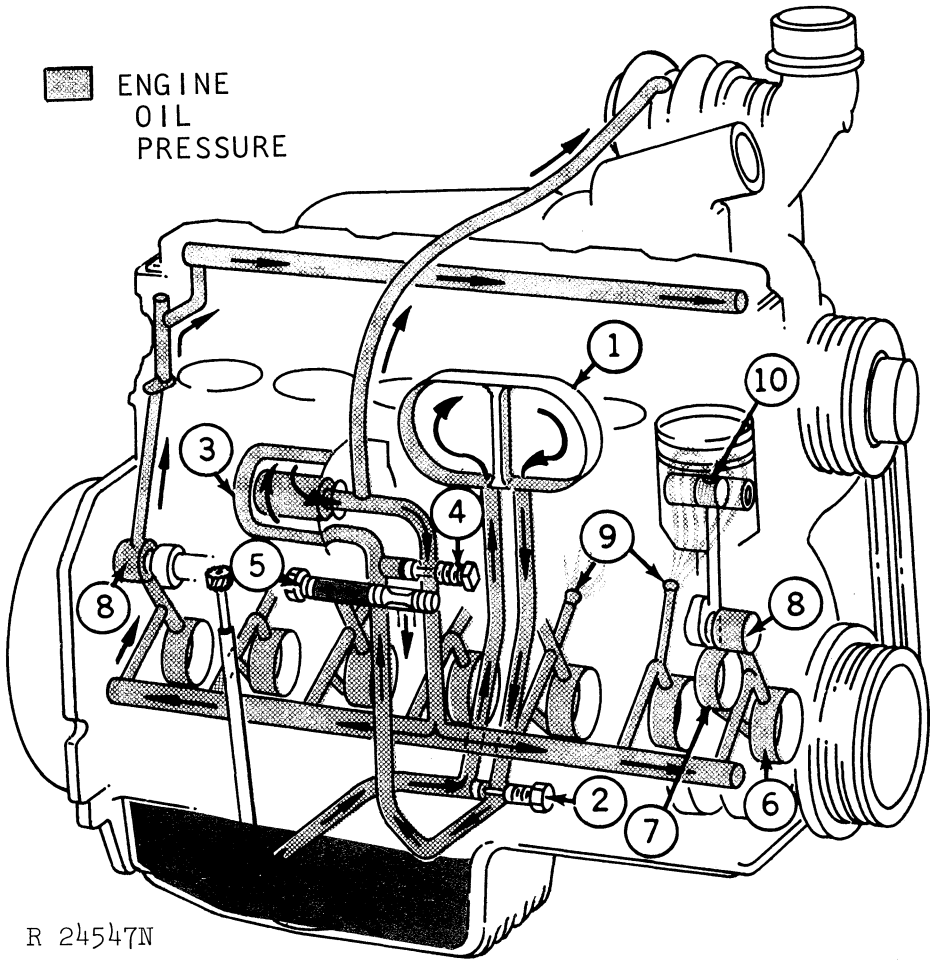

1—Engine Oil Cooler
2—Oil Cooler Bypass Valve
3—Oil Filter
4—Filter Bypass Valve
5—Oil Pressure Regulating Valve
6—Main Bearings
7—Connecting Rod Bearings
8—Camshaft Bushings
9—Piston Cooling Orifices
10—Oil Cup

Fig. 1-Engine Lubrication System

The engine lubrication system consists of a gear-driven positive displacement pump, oil cooler, oil filter, cooler bypass valves, oil pressure regulating valve and filter bypass valve.

Oil is pumped from the oil pan by the engine oil pump through the engine oil cooler (1, Fig. 1) around the oil cooler bypass valve (2) into the engine oil filter (3). Passing through the filter, the oil continues around the filter bypass valve (4) and in front of the engine oil pressure regulating valve (5) into the engine oil gallery in the cylinder block. Oil is then distributed, under pressure, to each main bearing fillet to lubricate main bearings (6) and piston cooling orifice.

Cross-drilled passages in the crankshaft distribute oil from the main bearing journals to the connecting rod journals to lubricate connecting rod bearings (7). Numbers 1, 3, 5, and 7 main bearing fillets are also drilled to lubricate the four camshaft bushings (8). A drilled passage from the rear camshaft bushing through the cylinder block and cylinder head provides lubrication to the rocker arm shaft.

Litho in U.S.A.

GENERAL INFORMATION—Continued

The piston cooling orifices (9) spray oil to cool pistons and liners and lubricate the connecting rod piston pin bushings through an oil cup (10) in the top of the connecting rod.

During cold weather starting or if the oil cooler is plugged, the oil cooler bypass valve senses pressure on the inlet side of the oil cooler and opens, allowing oil to flow directly to the oil cooler and cylinder block.

The oil filter bypass valve senses pressure on the non-filtered side of the filter and opens when the pressure is 30 psi (2.07 Bar) or greater than on the filtered side of the system. This allows unfiltered oil into the cylinder block and insures engine lubrication.

The oil pressure regulating valve maintains a specified 40 to 55 psi (2.75 to 3.79 Bar). If pressure is greater than specified on the filtered side of the housing, the valve opens, allowing oil on the inlet side to return to the oil pan, thus reducing pressure.

An oil line from the top of the oil pressure regulating valve housing insures lubrication to the turbocharger.

DIAGNOSING MALFUNCTIONS

Low Oil Pressure

Improper oil
Clogged cooler or filter
Excessive oil temperature
Oil pressure regulating valve failure
Excessive clearance between oil pump gears and cover
Clogged oil pump screen
Excessive main bearing clearance
Low oil level
Improper oil cooler bypass valve housing and tubes assembly

High Oil Pressure

Wrong oil viscosity
Clogged oil lines
Oil pressure regulating valve failure

Oil Sludge and Dilution

Improper operation
Coolant leakage into lubrication system
Incomplete combustion
Excessive oil temperature

CHECKING OIL PRESSURE

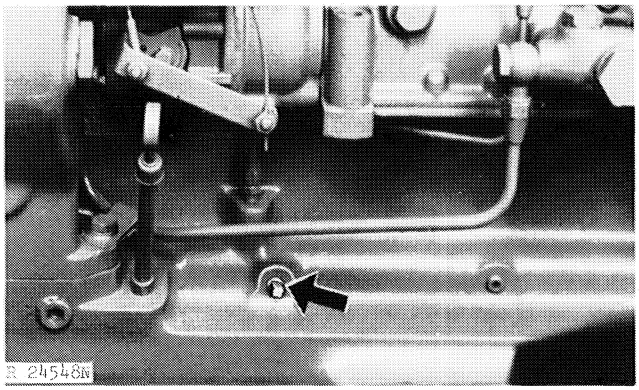

Fig. 2-Checking Engine Oil Pressure

Check engine oil pressure by removing pipe plug from main oil gallery. Install pressure gauge and run engine at 1900 rpm. Oil pressure should be 40 to 50 psi (2.75 to 3.79 Bar).

To adjust oil pressure, remove regulating valve spring at filter base and add or subtract washers as necessary.

OIL PRESSURE REGULATING VALVE HOUSING REPAIR

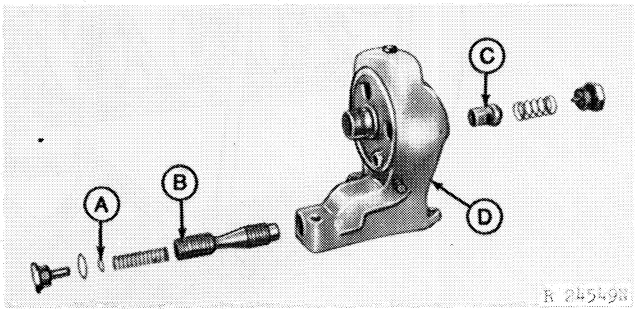

A—Adjusting Washer
B—Oil Pressure Regulating Valve
C—Filter Relief Valve
D—Oil Pressure Regulating Valve Housing

Fig. 3-Oil Pressure Regulating Valve Housing

Remove oil pressure regulator plug, spring and valve (Fig. 3) in base of oil pressure regulating valve housing. Check valve and valve bore for damage.

Check oil pressure regulator spring. The spring should compress to 1.71 in. at 30 to 33 lbs. (43.4 mm at 133 to 147 N) force. Check for proper number of adjusting washers.

Service filter as directed in tractor operator's manual.

Check filter bypass valve spring. The spring should compress to 1.38 in. at 18 to 22 lbs. (35.0 mm at 80 to 98 N) force.

Clean oil pressure regulating valve housing passages.

Install oil pressure regulating valve housing on engine. Install filter hand tight.

Litho in U.S.A.

OIL COOLER REPAIR

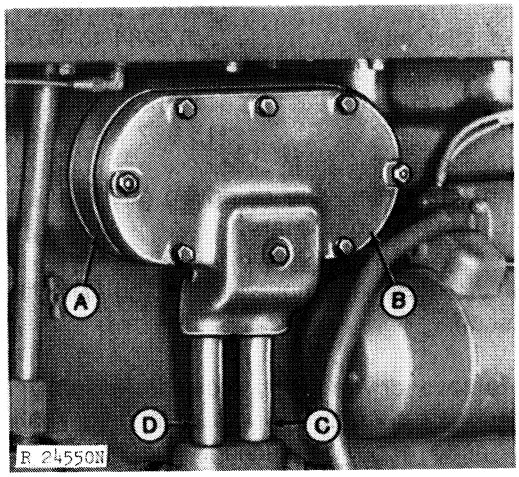

A—Oil Cooler Spacer
B—Oil Cooler Cover
C—To Cooler
D—From Cooler

Fig. 4-Engine Oil Cooler

Drain cooling system.

Check for clogged passage and scale build up. Clean with suitable brush, solvent and compressed air.

Install oil cooler spacer (A, Fig. 4) with large side toward cylinder block. Be sure all gaskets are correctly installed.

Install oil cooler, gasket with center web and oil cooler cover with pipes.

OIL COOLER BYPASS VALVE REPAIR

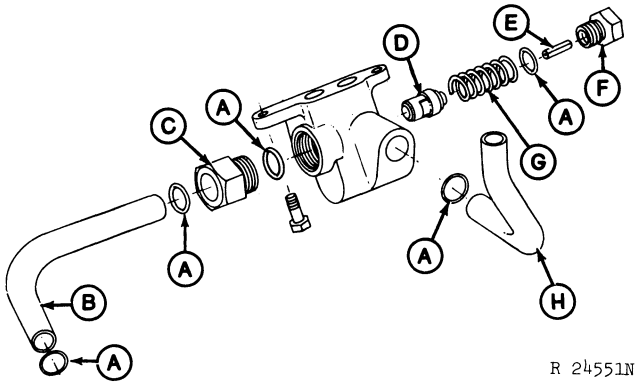

A—O-Rings
B—To Oil Pump
C—Gland Nut
D—Bypass Valve
E—Spring Pin
F—Plug
G—Spring
H—To Block

Fig. 5-Oil Cooler Bypass Valve Housing

Check cooler bypass valve assembly in block. Valve spring (G, Fig. 5) should compress to 1.38 in. at 18 to 22 lbs. (35.0 mm at 80 to 97 N) force.

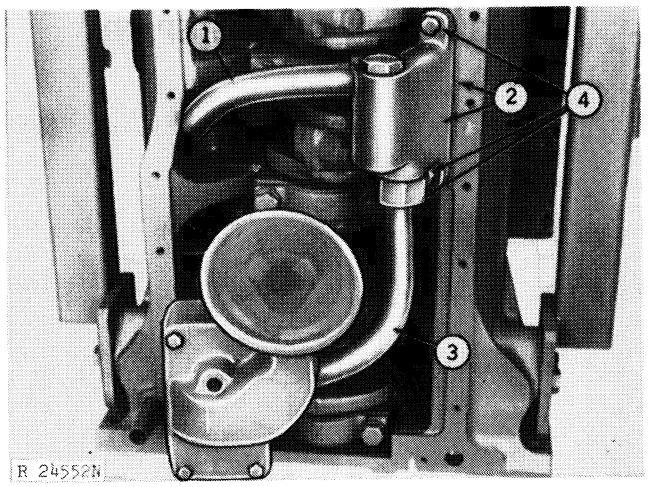

Fig. 6-Oil Cooler Bypass Valve Housing Installation

Be sure that cooler bypass valve housing tubes are clean. Install as follows:

1. Insert the long end of the cooler bypass housing-to-block tube into the housing. Insert the other end into the block.

2. Adjust tube and housing so housing is flat against the block mounting pad. Attach housing to block, but do not tighten cap screws.

3. Install oil pump-to-bypass housing tube in pump. Place gland nut with O-ring on tube.

4. Align tube and gland nut with bypass housing and tighten gland nut. Tighten oil cooler bypass housing-to-cylinder block cap screws.

Litho in U.S.A.

ENGINE OIL PUMP REPAIR

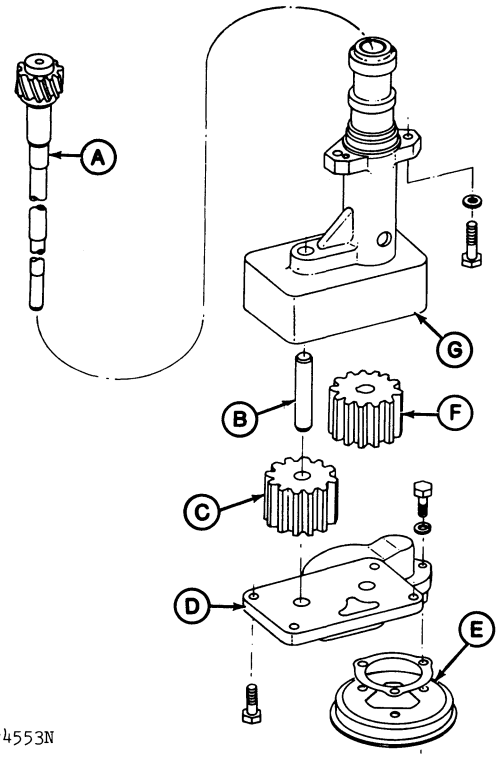

R 24553N

A—Drive Shaft
B—Idler Shaft
C—Idler Gear
D—Cover
E—Screen
F—Driven Gear
G—Housing

Fig. 7-Exploded View of Engine Oil Pump

Remove intake screen and pump housing cover (Fig. 7).

Examine gears and housing for wear or damage. Check sealing edge of pump housing for signs of damage that could cause leakage. Worn gears, shafts or housing can reduce pump output and could indicate oil contamination, sludge, or bent or warped shafts. The gear, shaft, and housing specifications are as follows:

Measurement	New Part Specification
Depth of gear bore in housing	1.7530 to 1.7570 in. (44.526 to 44.627 mm)
Gear thickness	1.7500 to 1.7520 in. (44.450 to 44.500 mm)
O.D. of gears	3.3801 to 3.3811 in. (85.854 to 85.879 mm)
I.D. of housing gear bore	3.3840 to 3.3860 in. (85.953 to 86.004 mm)
I.D. of driven gear	0.6220 to 0.6230 in. (15.799 to 15.824 mm)
I.D. of idler gear bushing	0.6300 to 0.6310 in. (16.002 to 16.027 mm)
O.D. of idler shaft	0.6284 to 0.6290 in. (15.961 to 15.977 mm)
O.D. of driven shaft	0.6235 to 0.6245 in. (15.837 to 15.862 mm)

If either the idler gear or driven gear must be replaced, replace both gears.

The idler gear is removed by sliding from the idler gear shaft.

To remove driven gear, press from shaft. To install, support shaft and press gear onto shaft flush with sealing edge of housing. The drive and idler shafts will extend above the pump housing.

If the drive gear on top of the shaft is excessively worn or damaged, check the integral oil pump drive gear on the camshaft for wear or damage. Replace pump drive gear and camshaft as necessary.

Installation

Install idler gear and pump cover, and intake screen. Spin drive gear. Driven and idler gears must turn freely.

Install engine oil pump, making sure that pump drive gear and camshaft oil pump drive gear mesh.

Use new cap screws and washers when installing oil pump. Tighten cap screws to 25 ft-lbs (34 Nm).

Align oil pan with rear face of cylinder block and tighten the 1/2-inch cap screws to 85 ft-lbs (115 Nm) torque. Tighten the 3/8-inch cap screws to 35 ft-lbs (47 Nm) torque.

Fill crankcase and cooling system.

Group 30
COOLING SYSTEM

GENERAL INFORMATION

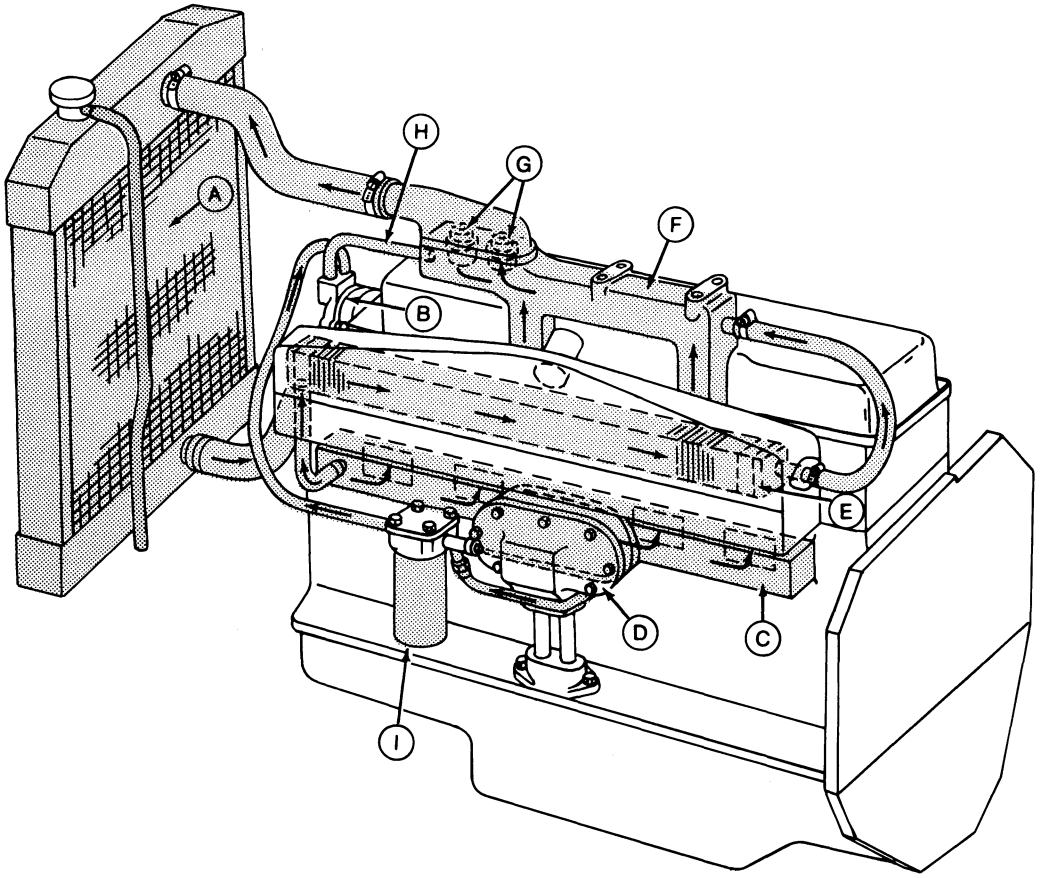

R32355C

A—Radiator
B—Water Pump
C—Cylinder Block Main Cooling Gallery
D—Engine Oil Cooler
E—Intercooler
F—Water Manifold
G—Thermostats
H—Water Bypass Pipe
I —Coolant Conditioner Filter

Fig. 1-Engine Cooling System

The cooling system consists of a conventional type radiator (A, Fig. 1), water pump (B), two thermostats (G), and water manifold (F).

The pump draws coolant from the bottom of the radiator and discharges it into the main coolant gallery (C) on the left-hand side of the engine. Coolant from the gallery circulates through the block to cool block and cylinder liners, then flows into the cylinder head. From the cylinder head, the coolant passes into the water manifold (F) and thermostat housing.

If the thermostats are closed (as during warm-up periods) coolant is directed back to the pump through the bypass pipe (H) to be recirculated. This provides a faster and more uniform warm-up.

If the thermostats are open (engine at normal operating temperature) coolant flows back through the thermostats to the top of the radiator.

Coolant is also taken from the main gallery into the intercooler (E) to cool intake air. It circulates through the intercooler and out to the water manifold.

The engine oil cooler (D), located in the main gallery, receives its cooling capacities from the coolant flow around it.

Additionally, coolant is drawn off the main gallery to the coolant conditioner filter (I). Here an anticorrosive chemical is added to the coolant while any debris that may be present in the cooling system is removed. The coolant returns to the system at the inlet side of the water pump.

Litho in U.S.A.

DIAGNOSING MALFUNCTIONS

Engine Overheats

Loose fan belt
Dirty radiator or grille screen
Low coolant level
Low oil level
Improper operation
Defective head gasket
Incorrect timing
Faulty thermostats
Faulty radiator pressure cap
Faulty water pump
Corroded coolant passages

Low Coolant Level

Improper maintenance
Improper operation
Faulty radiator cap
Damaged radiator
Water pump seal leakage
Leakage

RADIATOR AND FAN

Visually check the radiator for leaks or damage.

If no leaks can be seen but leaking persists, remove radiator from the tractor and perform the following test:

1. Install radiator cap, plug and overflow tube and the outlet pipe.
2. Attach an air hose to the inlet connection.
3. Apply 10 psi (68.95 kPa) compressed air and submerge in tank of water. Check for air bubbles at seams and radiator core.

NOTE: Repairs should not be attempted except by experienced radiator repair personnel.

Check radiator cap for defects. Cap should maintain 6.25 to 7.50 psi (43.09 to 51.71 kPa) pressure.

Check fan pulley for wear or damage. Replace as necessary.

Use a belt tension gauge to check belts. Adjust to the following specifications:

Alternator Belt Tension

New Belt ..... 94-104 lbs (423-467 N)
After Run In* ..... 85-94 lbs (378-423 N)

*Immediately after run in (approximately 10 min.) check tension. If tension is within specification, no adjustment is necessary. If tension is not within specification, wait ten minutes; loosen belts and tension to specifications. Tension front belt only.

WATER PUMP

Removal

Disconnect electrical wiring and remove alternator.

Drain cooling system and remove inlet and outlet pipes from the water pump. Remove water pump.

Disassembly and Inspection

Use puller to remove fan pulley.

Remove pump cover. Examine pump for cracks and leakage. Check for wear on impeller and inside of housing.

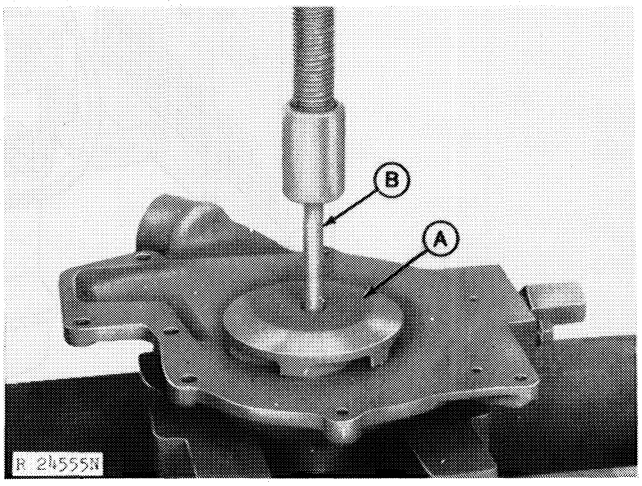

A—Impeller **B—Driver**

Fig. 2-Removing Bearing Shaft

If necessary, use JDE-262 Driver to press bearing shaft from impeller and housing (Fig. 2).

Inspect pump parts for wear or damage. Replace as necessary.

Pump leakage can be caused by a cracked housing, damaged seal, impeller bore, cup and insert, or bearing.

Check shaft bore in impeller and bearing shaft for wear. A new impeller bore is 0.6242 to 0.6252 inch (15.855 to 15.880 mm). New shaft O.D. is 0.6262 to 0.6267 inch (15.905 to 15.918 mm).

Check seal under magnification for nicks, scratches, cracks, or foreign material. Leakage at the drain hole in the housing usually indicates a leaking seal. Replace seal, cup and insert as necessary.

Litho in U.S.A.

Assembly

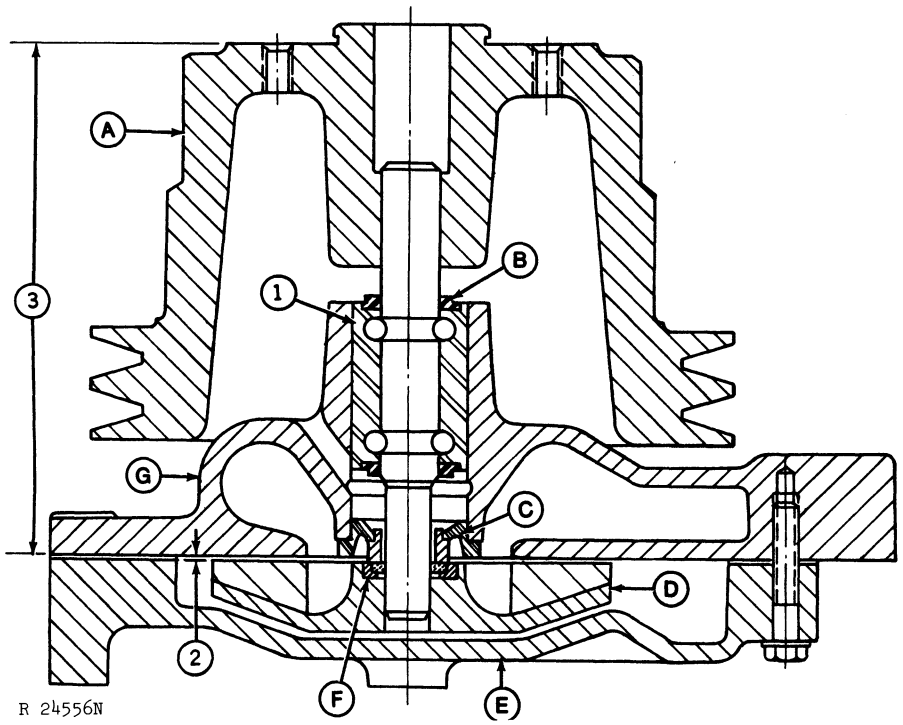

A—Fan Pulley **C—Seal** **E—Pump Cover** **G—Housing**
B—Bearing Shaft **D—Impeller** **F—Cup and Insert**

Fig. 3-Water Pump Assembly

Coat bearing shaft with light coat of clean SAE 10W engine oil. Press bearing shaft (B, Fig. 3) into housing with bearing flush within 0.005 inch (0.13 mm) of housing bore.

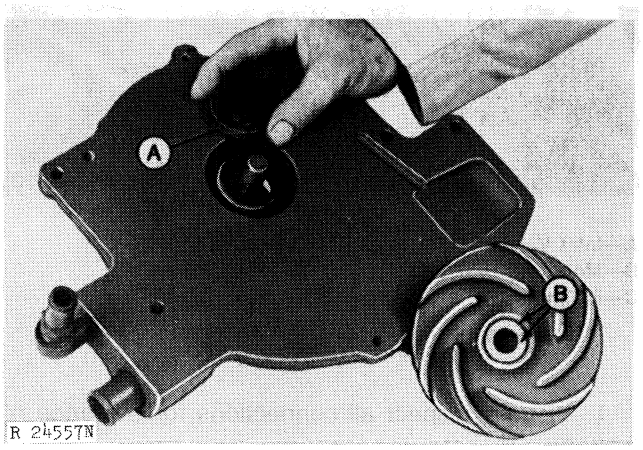

A—Seal **B—Cup and Insert**

Fig. 4-Seal Installation

Be sure that seal (A, Fig. 4) is clean and dry. Install into seal bore as shown in Fig. 4.

Install the rubber cup and ceramic insert (B, Fig. 4) into the impeller. The insert is placed in the cup with polished side out (the back side of the insert will have a groove or three dots for identification). Place both cup and insert at an angle in the impeller and snap into position by hand.

IMPORTANT: The seal lip and insert face must be perfectly clean as both surfaces are lapped to a fine finish.

Apply a light coat of SAE 10W engine oil to insert face (do not use grease).

Support pump shaft and press impeller into place (Fig. 5). Be sure that impeller is started straight. Press until impeller is a minimum of 0.015 to 0.035 inch (0.38 to 0.89 mm) from housing seat (2, Fig. 3). Turn shaft and impeller to be sure that impeller does not drag on housing.

Assembly—Continued

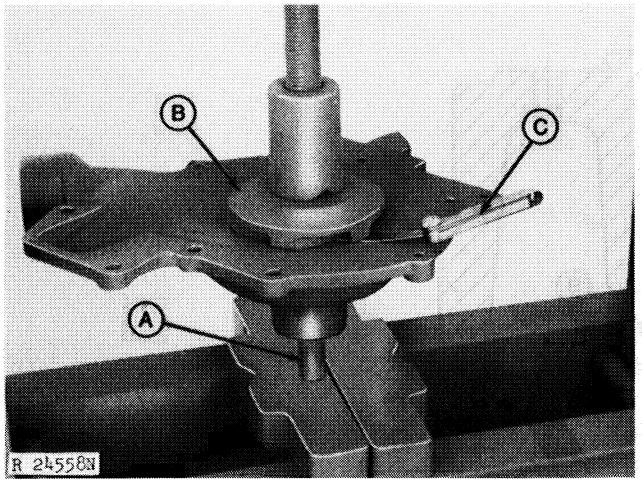

A—Pump Shaft **C—Feeler Gauge**
B—Impeller

Fig. 5-Impeller Installation

Support bearing shaft through impeller bore and press fan pulley on to shaft. Edge of fan pulley should be 6.54 (165 mm) inches from bottom of pump housing (3, Fig. 3).

Installation

Install fan and cover on pump. Tighten cap screws to 35 ft-lbs (47 Nm) torque. Install pump on engine.

Connect pipes and hoses to water pump. Be sure that connections are tight and hoses are not kinked or stretched.

Install alternator and belts. Adjust belts to proper tension given on page 30-2.

Fill radiator with clean soft water and John Deere Summer Engine Coolant Conditioner or antifreeze solution.

WATER MANIFOLD AND THERMOSTATS

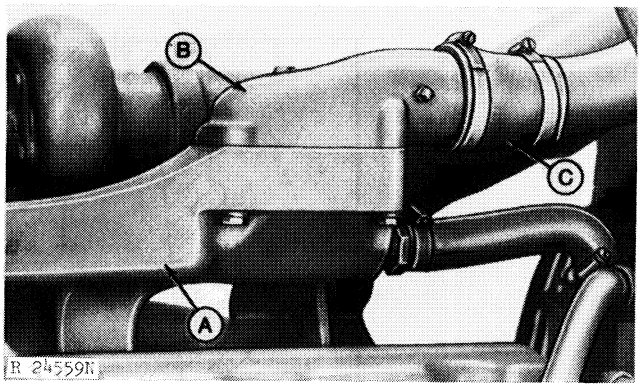

A—Water Manifold **C—Upper Radiator Hose**
B—Thermostat Cover

Fig. 6-Washer Manifold and Thermostats

Remove and inspect for cracks or damage. Replace or repair as necessary.

Visually inspect thermostats for defects. Test for operating temperature range of 160° to 180°F (71 to 82°C).

Install manifold (A, Fig. 6) and thermostats using new gaskets.

COOLANT CONDITIONER FILTER

Inspection and Repair

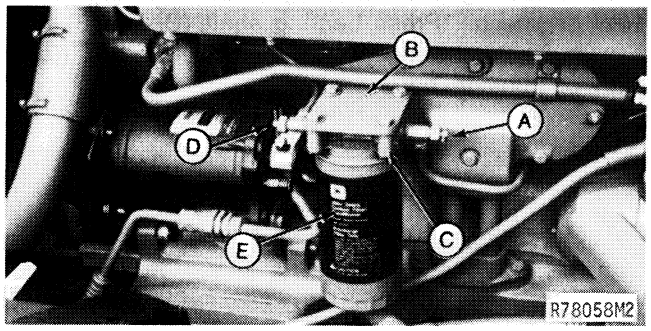

A—Inlet Valve **D—Outlet Valve**
B—Mounting Bracket **E—Filter Element**
C—Mounting Base

Fig. 7-Coolant Conditioner Filter

1. Visually inspect all connections for evidence of leakage.
2. Drain coolant from engine block.

3. Disconnect fittings at mounting base.

4. Remove four cap screws and remove base from mounting bracket.

5. Inspect base for cracks or damage and replace as necessary.

Installation

1. Apply joint sealing compound to all fittings before installation. Tighten fittings securely.

2. Attach mounting base to mounting bracket, tightening cap screws to 35 ft-lbs (48 Nm) (4.8 kgm). Be sure outlet side of base is facing water pump.

3. Connect fittings to mounting base and tighten securely.

4. Apply a thin film of engine oil to filter gasket and install new filter. Tighten until gasket contacts mounting base, then an additional 1/2 to 3/4 turn.

Litho in U.S.A.

Litho in U.S.A.

Group 35
SPECIFICATIONS AND SPECIAL TOOLS
SPECIFICATIONS

Item	New Part Specification	Wear Tolerance
Cylinder Head, Valves, and Camshaft		
Valve clearance		
Intake valve	0.018 in. (0.46 mm)	----
Exhaust valve	0.028 in. (0.71 mm)	----
Valve lift at specified clearance		
Intake valve	0.4125 to 0.4425 in. (10.478 to 11.240 mm)	----
Exhaust valve	0.4135 to 0.4435 in. (10.503 to 11.265 mm)	----
Valve springs - compressed		
valve closed	1.81 in. at 54 to 62 lbs. (45.9 mm at 240.2 to 275.8 N)	
Valve open	1.36 in. at 133 to 153 lbs. (34.5 mm to 591.6 to 680.5 N)	----
Valve face angle	29.5°	----
Valve face O.D.	1.710 to 1.720 in. (43.43 to 43.69 mm)	----
Valve stem O.D.	0.3715 to 0.3725 in. (9.436 to 0.461 mm)	----
Valve guide I.D.	0.3745 to 0.3755 in. (9.512 to 9.537 mm)	----
Valve stem-to-guide clearance	0.0020 to 0.0040 in. (0.051 to 0.102 mm)	0.0060 to 0.0080 in. (0.152 to 0.203 mm)
Valve seat width	0.0830 to 0.0930 in. (2.108 to 2.362 mm)	----
Valve seat concentricity with guide	0.0020 in. (0.051 mm)	----
Valve seat angle	30°	
Valve face above head	0.0240 to 0.0380 in. (0.620 to 0.965 mm)	0.0060 in. (1.524 mm) recessed
Camshaft end play	0.0025 to 0.0085 in. (0.064 to 0.216 mm)	0.0150 in. (0.381 mm)
Camshaft thrust place thickness	0.1860 to 0.1890 in. (4.724 to 4.801 mm)	0.1820 in. (4.623 mm)
Camshaft bushing journal O.D.	2.3745 to 2.3755 in. (60.312 to 60.337 mm)	----
Camshaft bushing I.D.	2.3775 to 2.3795 in. (60.388 to 60.439 mm)	----
Camshaft bushing-to-journal clearance		0.0060 in. (0.152 mm)
Torques		
Cylinder head-to-block - Initial	105 ft-lbs (142 Nm)	----
Second	110 to 120 ft-lbs (149 to 163 Nm)* 117 to 143 ft-lbs (158 to 193 Nm)**	----
Final	125 to 135 ft-lbs (169 to 183 Nm)* 135 to 165 ft-lbs (183 to 224 Nm)**	----
Rocker arm shaft clamps	45 to 65 ft-lbs (61 to 88 Nm)	----
Intake manifold to cylinder head	35 ft-lbs (47 Nm)	----
Intake cover-to-intake manifold	20 ft-lbs (27 Nm)	----
Camshaft thrust plate	20 ft-lbs (27 Nm)	----
Camshaft gear	85 ft-lbs (115 Nm)	----
Damper pulley	150 ft-lbs (203 Nm)	----
Timing gear cover	30 ft-lbs (41 Nm)	----
Oil pan - 1/2" cap screws	85 ft-lbs (115 Nm)	----
3/8" cap screws	35 ft-lbs (47 Nm)	----

**"F" grade cap screws*
***"G" grade cap screws*

Cylinder Block, Liners, Pistons, and Rods		
Cylinder liner height above block	0.002 to 0.005 in. (0.051 to 0.102 mm)	
Cylinder liner height above used block	0.000 to 0.004 in. (0.000 to 0.102 mm)	
Piston oil control ring clearance	0.0024 to 0.0040 in. (0.061 to 0.102 mm)	0.0065 in. (0.165 mm)

Litho in U.S.A.

Item	New Part Specification	Wear Tolerance
Cylinder Block, Liners, Pistons, and Rods—Continued		
Piston O.D.		
Top of skirt (3.03 in. [7.70 cm] from bottom of piston)	4.5525 to 4.5532 in. (115.634 to 115.651 mm) "Low" 4.5532 to 4.5539 in. (115.651 to 115.669 mm) "High"	---- ----
Bottom of skirt (0.09 in. [2.28] from bottom of piston)	4.5575 to 4.5582 in. (115.760 to 115.778 mm) "Low" 4.5582 to 4.5589 in. (115.778 to 115.796 mm) "High"	---- ----
Cylinder liner I.D.	4.5615 to 4.5625 in. (115.862 to 115.888 mm) "Low" 4.5625 to 4.5635 in. (115.888 to 115.913 mm) "High"	---- ----
Piston-to-liner clearance		
Top of skirt	0.0083 to 0.0100 in. (0.2108 to 0.2540 mm)	----
Bottom of skirt	0.0036 to 0.0053 in. (0.0914 to 0.1346 mm)	0.006 in. (0.152 mm)
Piston pin O.D.	1.8739 to 1.8745 in. (47.597 to 47.612 mm)	----
Piston pin bore in piston I.D.	1.8748 to 1.8752 in. (47.620 to 47.630 mm)	----
Rod pin bushing I.D.	1.8752 to 1.8762 in. (47.630 to 47.655 mm)	----
Pin-to-bushing oil clearance	0.0007 to 0.0023 in. (0.0178 to 0.0584 mm)	----
Connecting rod bearing assembled I.D.	3.0005 to 3.0025 in. (76.212 to 76.263 mm)	----
Connecting rod journal O.D.	2.9980 to 2.9990 in. (76.149 to 76.175 mm)	----
Bearing to journal clearance	0.0010 to 0.0040 in. (0.0254 to 0.1016 mm)	----
Torques		
Connecting rod cap screws	55 ft-lb (75 Nm) (7.5 kgm), then an additional 1/4 turn (90 degrees) (See page 20-15-7)	----
Piston cooling orifices	85 to 110 in-lbs. (9.60 to 12.43 Nm)	----
Crankshaft, Main Bearings, and Flywheel		
Crankshaft end play	0.0015 to 0.0155 in. (0.038 to 0.394 mm)	----
Clutch shaft pilot bushing I.D.	1.0025 to 1.0055 in. (25.463 to 25.540 mm)	----
Clutch shaft O.D. at bushing	0.9995 to 1.0005 in. (25.387 to 25.413 mm)	----
Main bearing journal O.D.	3.3720 to 3.3730 in. (85.649 to 85.674 mm)	----
Main bearing assembled I.D.	3.3742 to 3.3762 in. (85.705 to 85.755 mm)	----
Bearing-to-journal clearance	0.0022 to 0.0042 in. - 0.0077 in. Max. (0.0508 to 0.1067 mm - 0.1956 mm)	----
Journal taper per inch of journal length	0.0001 in. (0.0025 mm)	----
Journal out-of-roundness	0.0040 in. (0.102 mm)	----
Undersized bearing available	0.002, 0.010, 0.020, and 0.030 in. (0.05, 0.25, 0.51, and 0.76 mm)	----
Torques		
Damper pulley to crankshaft	150 ft-lbs. (203 Nm)	----
Main bearing caps	150 ft-lbs. (203 Nm)	----
Rear crankshaft oil seal housing	20 ft-lbs (27 Nm)	----
Flywheel-to-crankshaft	85 ft-lbs (115 Nm)	----
Lubrication System		
Engine oil pressure	40 to 55 psi (2.75 to 3.79 bar)	----
Oil pressure regulating valve spring - compressed	1.71 in. at 30 to 33 lbs. (43.4 mm at 133 to 147 N)	----
Filter bypass valve spring - compressed	1.38 in. at 18 to 22 lbs. (35.0 mm at 80 to 98 N)	----

Item	New Part Specification	Wear Tolerance
Lubrication System—Continued		
Cooler bypass valve spring - compressed	1.38 in. at 18 to 22 lbs. (35.0 mm at 80 to 98 N)	----
Depth of gear bore in housing	1.7530 to 1.7570 in. (44.526 to 44.627 mm)	----
Gear thickness	1.7500 to 1.7520 in. (44.450 to 44.500 mm)	----
O.D. of gears	3.3801 to 3.3811 in. (85.854 to 85.879 mm)	----
Housing gear bore I.D.	3.3840 to 3.3860 in. (85.953 to 86.004 mm)	----
Driven gear I.D.	0.6220 to 0.6230 in. (15.799 to 15.824 mm)	----
Idler gear bushing I.D.	0.6300 to 0.6310 in. (16.002 to 16.027 mm)	----
Idler shaft O.D.	0.6284 to 0.6290 in. (15.961 to 15.977 mm)	----
Driven shaft O.D.	0.6235 to 0.6245 in. (15.837 to 15.862 mm)	----
Oil pump-to-cylinder block cap screws	25 ft-lbs (34 Nm)	
Cooling System		
Radiator leakage test	10 psi (68.95 kPa) air pressure	----
Radiator cap pressure	6.25 to 7.50 psi (43.09 to 51.71 kPa)	----
Fan belt tension	New belt	
Single belt	130-140 lbs. (572-622 N)	----
Dual belt	95-104 lbs. (423-467 N) After Run In	----
All belts	85-94 lbs. (378-423 N)	----
Impeller bore I.D.	0.6242 to 0.6252 in. (15.855 to 15.880 mm)	----
Pump shaft O.D.	0.6262 to 0.6267 in. (15.905 to 15.918 mm)	----
Impeller installed	0.015 to 0.025 in. (0.3810 to 0.6350 mm) clearance	----
Fan to pulley cap screws	35 ft-lbs (47 Nm) torque	----
Thermostats opening temperature	160° to 180°F (71° to 82°C)	----

INSTRUCTIONS FOR ENGINE BREAK-IN

Use a dynamometer to perform the following break-in procedure. If necessary, engine break-in can be performed without a dynamometer if under controlled operating conditions.

Fill engine crankcase with Torq-Gard Supreme 10W-20 oil to proper level for use during the break-in operation.

Time	Load	Engine Speed	Remarks
5 Minutes	No Load	800 RPM	Check oil pressure, coolant temperature and leakage.
5 Minutes	No Load	1500 to 2000 RPM	
5 Minutes	1/4 Load	1900 to 2100 RPM	
10 Minutes	1/2 Load	1900 to 2100 RPM	
10 Minutes	1/2 to 3/4 Load	1900 to 2100 RPM	
10 Minutes	3/4 to Full Load	2100 RPM	

After break-in, run engine 1 to 2 minutes at 1500 rpm, No Load before shut-down. Loosen, then retighten cylinder head cap screws per specified sequence to 125 to 135 ft-lbs (169 to 183 Nm) on "F" Grade cap screws. On "G" Grade cap screws, tighten to 135 to 165 ft-lbs (183 to 224 Nm). Loosen, then retighten rocker arm shaft clamps to 45 to 65 ft-lbs (61 to 88 Nm). Check and reset valve clearance to specifications.

During the first 100 hours of operation, avoid over-loads, excessive idling, and no-load operations. After 100 hours, drain crankcase oil and change oil filter. Fill crankcase with oil of proper viscosity and service classifications.

SPECIAL TOOLS

No.	Name	Use
JDE-81*	Engine Rotation Tool	Manually rotate engine flywheel
D-20002W1*	Valve Guide Knurling Tool	Knurl valve guides
JDE-41296*	Puller	Remove valve seat inserts
D-01003AA* (JDST-32)	Engine Repair Stand	Hold engine for repairs
D-05001ST* (JDG-13)	Adapter Plates	Mount engine to engine stand
D-15001NU* (ND425)	Magnetic Holding Tools	Hold cam followers away from camshaft
JDE-6*	Bushing Replacement Set	Replace camshaft bushings
D-01062AA* (974)	Puller	Remove cylinder liners
D-17006BR*	Flex-Hone	Deglaze cylinder liners
JDE-98*	Bushing Tool	Replace connecting rod piston pin bushings
D-17015BR*	Brush	Clean cylinder liner counterbore
AR54749**	Lubricating Soap	Lubricate cylinder liner packings and O-rings
JDE-93*	Ring Expander	Install piston rings
JDE-96*	Ring Compressor	Install pistons in cylinder liner
D-01061AA* (954)	Blind-hole Puller	Remove clutch shaft pilot bushing and adapter
JDH-7	Driver	Install crankshaft gear
JDE-106-1*	Guide	Install rear crankshaft wear sleeve
JDE-106-2*	Driver	Install rear crankshaft oil seal and wear sleeve
D-01045AA* (27797)	Bushing Driver Set	Install front crankshaft oil seal
JD-262*	Driver	Remove water pump bearing shaft

**Order from Service Tools, Box 314, Owatonna, Minnesota 55060*
***John Deere Parts*

Litho in U.S.A.

Section 25
8630 ENGINE

CONTENTS OF THIS SECTION

Page

GROUP 5 - GENERAL INFORMATION AND DIAGNOSIS
- General Information 5-2
- Diagnosing Engine Malfunctions 5-2

GROUP 10 - CYLINDER HEAD, VALVES, AND CAMSHAFT
- General Information 10-1
- Diagnosing Malfunctions 10-1
- Preliminary Valve Train Inspection 10-1
- Cylinder Head and Valves
  - Removal and Repair 10-2
  - Assembly and Installation 10-5
  - Valve Clearance Adjustment 10-5
- Camshaft
  - Removal 10-6
  - Repair 10-6
  - Installation 10-7

GROUP 15 - CYLINDER BLOCK, LINERS, PISTONS AND RODS
- General Information 15-1
- Diagnosing Malfunctions 15-1
- Removal 15-2
- Repair
  - Pistons 15-2
  - Liners 15-4
  - Piston Pins 15-5
  - Rods 15-6
- Assembly and Installation 15-7

GROUP 20 - CRANKSHAFT, MAIN BEARINGS, AND FLYWHEEL
- General Information 20-1
- Diagnosing Malfunctions 20-1
- Checking End Play 20-2
- Removal 20-2

Page

- Inspection and Repair
  - Crankshaft and Flywheel 20-2
  - Main Bearings and Journals 20-2
  - Rear Crankshaft Oil Seal, Housing, and Wear Sleeve 20-3
  - Damper assembly 20-5
  - Front Oil Seal and Wear Sleeve 20-5
- Assembly 20-6
- Installation 20-8

GROUP 25 - LUBRICATION SYSTEM
- General Information 25-1
- Diagnosing Malfunctions 25-2
- Oil Pressure Regulating Housing Repair 25-3
- Oil Pump Repair 25-3
- Assembly 25-5

GROUP 30 - COOLING SYSTEM
- General Information 30-1
- Diagnosing Malfunctions 30-2
- Radiator and Fan 30-2
- Water Pump 30-2
- Water Manifold and Thermostats 30-4

GROUP 35 - SPECIFICATIONS AND SPECIAL TOOLS
- Cylinder Head, Valves, and Camshaft 35-1
- Cylinder Block, Liners, Pistons and Rods 35-2
- Crankshaft, Main Bearings and Flywheel 35-3
- Lubrication System 35-3
- Cooling System 35-3
- Engine Break-In 35-4
- Special Tools 35-5

Litho in U.S.A.

Group 5
GENERAL INFORMATION AND DIAGNOSIS

GENERAL INFORMATION

The engine is a turbo-charged, liquid-cooled, 6-cylinder, diesel fueled, valve-in-head, vertical in-line four-cycle engine.

For basic theory of engine operation see FOS-30 "Engines" manual.

DIAGNOSING ENGINE MALFUNCTIONS

Will Not Start

Fuel System Malfunction—See Section 30
- Foreign matter in fuel
- Improper fuel
- Faulty fuel pump
- Restricted air intake system
- Faulty injection nozzles
- Plugged fuel Filter

Electrical System Malfunction—See Section 40
- Corroded or loose battery terminals
- Weak battery

Uneven Running or Frequent Stalling

Basic Engine Problem—See This Section
- Incorrect timing
- Coolant temperature below normal
- Engine overheating
- Improper valve clearance
- Cylinder head gasket leaking
- Valves sticking or burned
- Worn or broken compression rings
- Low compression

Service Problem—See Section 10
- Low fuel supply

Service Problem—See Section 10
- Low fuel supply

Fuel System Malfunction—See Section 30
- Restricted fuel lines or filters
- Faulty fuel pump
- Faulty injection pump
- Faulty injection nozzles
- Exhaust system restricted

Engine Misses

Basic Engine Problem—See This Section
- Incorrect valve clearance
- Incorrect timing
- Engine overheating
- Weak valve springs
- Burned, warped, pitted, or sticking valves
- Low compression
- Worn camshaft lobes (could be caused by faulty damper)

Fuel System Malfunction—See Section 30
- Water in fuel
- Mixture of gasoline and diesel fuel
- Air in fuel
- Faulty injection nozzles
- Faulty injection pump

Lack of Power

Basic Engine Problem—See This Section
- Incorrect timing
- Wrong viscosity crankcase oil
- Engine overheating
- Incorrect valve clearance
- Incorrect valve timing
- Blown cylinder head gasket
- Worn camshaft lobes
- Burned, warped, pitted or sticking valves
- Weak valve springs
- Low compression

Service Problem—See Section 10
- Dirty or obstructed air cleaners
- Improper fuel
- Wrong oil viscosity

Fuel System Malfunction—See Section 30
- Incorrect throttle linkage
- Plugged fuel tank vent
- Plugged fuel filters
- Faulty injection pump
- Faulty injection nozzles
- Faulty fuel pump
- Restricted exhaust system
- Low intake manifold pressure

Power Train Malfunction—See Section 50
- Clutch slipping

Litho in U.S.A.

Engine Overheats

Basic Engine Problem—See This Section
- Incorrect engine timing
- Radiator or side grille screen dirty
- Loose or broken fan belt
- Faulty thermostat
- Defective radiator pressure cap
- Defective head gasket
- Crankcase oil level low
- Low coolant level
- Cooling system limed up
- Faulty water pump

Service Problem—See Section 10
- Engine overloaded
- Crankcase oil level low
- Improper fuel

Fuel System Malfunction—See Section 30
- Excessive fuel delivery
- Improper injection pump timing

Excessive Oil Consumption

Basic Engine Problem—See This Section
- Crankcase oil too thin
- Oil pressure too high
- Oil level too high
- Restricted oil passage from valve cover
- Worn valve guides or valve stems
- Oil control rings worn or broken
- Scored liners or pistons
- Excessive ring groove wear in piston
- Rings sticking in grooves of piston
- Oil return holes in piston clogged
- Insufficient piston ring tension
- Piston ring gaps not staggered
- Worn crankshaft thrust bearing (misaligned piston and rod)
- Front or rear crankshaft oil seal faulty
- Plugged oil cooler—oil or water passages

Service Problem—See Section 10
- Crankcase oil too thin
- Oil level too high

Fuel System Malfunction—See Section 30
- Restricted air intake system

Low Oil Pressure

Basic Engine Problem—See This Section
- Improper regulating valve adjustment
- Improper oil
- Low oil level
- Excessive main and connecting rod bearing clearance
- Leakage at internal oil passages
- Faulty oil pump
- Defective engine oil cooler

Service Problem—See Section 10
- Low oil level
- Improper oil

Electrical System Malfunction—See Section 40
- Defective oil pressure indicator lamp
- Faulty oil pressure sending unit

High Oil Pressure

Basic Engine Problem—See This Section
- Stuck or improperly adjusted regulating valve

Excessive Fuel Consumption

Basic Engine Problem—See This Section
- Low compression
- Incorrect engine timing

Service Problem—See Section 10
- Engine overloaded

Fuel System Malfunction—See Section 30
- Leaks in fuel system
- Restricted air cleaners
- Faulty injection pump
- Faulty injection nozzles

Black or Gray Exhaust Smoke

Basic Engine Problem—See This Section
- Incorrect engine timing

Service Problem—See Section 10
- Improper grade of fuel
- Engine overloaded

Fuel System Malfunction—See Section 30
- Excessive fuel delivery
- Faulty injection nozzles
- Restricted air cleaners
- Defective muffler
- Defective turbocharger

Litho in U.S.A.

White Exhaust Smoke

Basic Engine Problem—See This Section
- Low compression

Fuel System Malfunction—See Section 30
- Faulty injection nozzles
- Improper fuel

Slow Acceleration

Fuel System Malfunction—See Section 30
- Faulty injection pump
- Faulty injection nozzles

Detonation

Basic Engine Problem—See This Section
- Carbon buildup in compression chambers

Fuel System Malfunction—See Section 30
- Oil picked up by intake air stream
- Faulty injection nozzles

Abnormal Engine Noise

Basic Engine Problem—See this Section
- Low engine oil level
- Excessive valve clearance
- Worn cam followers
- Bent push rods
- Worn rocker arm shafts
- Worn main or connecting rod bearings
- Foreign material in combustion chamber
- Worn piston pin bushings and pins
- Scored piston
- Incorrect engine timing
- Excessive crankshaft end play
- Loose main bearing cap
- Worn timing gears
- Worn oil pump gears
- Broken pump shaft
- Camshaft oil pump drive gear worn or broken

Contamination

Antifreeze in Crankcase Oil
- Loose cylinder head cap screws
- Cylinder head gasket failure
- Cylinder head or block damaged
- Cylinder liner packings or O-ring failure

Fuel in Crankcase Oil
- Faulty injection pump seals
- Faulty injection pump seals
- Faulty injection nozzles

Aluminum Particles in Oil Pan
- Scored pistons
- Main or connecting rod bearing failures

Brass Particles in Oil Pan
- Camshaft bushing failure
- Oil pump bushing failure
- Piston pin bushing failure

Sludge in Oil Pan
- Improper oil
- Improper maintenance
- Poor crankcase ventilation
- Faulty air cleaner assembly
- Antifreeze in crankcase oil

Litho in U.S.A.

Group 10
CYLINDER HEAD, VALVES, AND CAMSHAFT

GENERAL INFORMATION

The cylinder head is equipped with replaceable valve guides and valve seat inserts.

Dual valve springs for each valve reduce vibration and valve flutter. Valve rotators are installed at the bottom of the valve springs on both intake and exhaust valves.

The camshaft is supported by four pressure-lubricated bushings mounted in bores in the cylinder block. A thrust plate mounted on the front of the cylinder block takes up camshaft thrust.

DIAGNOSING MALFUNCTIONS

The following is a list of possible valve train malfunctions and causes:

Sticking Valves

Insufficient lubrication
Carbon deposits on valve stem
Worn valve guides
Warped valve stems
Cocked or broken valve springs
Worn or distorted valve seats

Warped, Worn, or Distorted Valve Guides

Excessive heat
Lack of lubrication
Cylinder head distortion
Unevenly tightened cylinder head cap screws

Distorted Cylinder Head and Cylinder Head Gasket Leakage

Excessive oil pressure
Improperly tightened cylinder head cap screws
Faulty gasket installation
Improper cylinder liner height above cylinder block

Worn or Broken Valve Seats

Excessive heat
Improper valve clearance
Improper valve timing
Misaligned valves
Distorted cylinder head
Carbon deposits on seats due to incombustion
Valve spring tension too weak

Camshaft Failures

Scored camshaft lobes due to inadequate lubrication
Excessive end play due to thrust plate wear
Broken or warped camshaft due to improper timing

Burned, Pitted, Worn, or Broken Valves

Improper valve train timing
Improper engine operation
Insufficient cooling
Insufficient lubrication
Worn or distorted valve seats
Worn valve guides
Cocked or broken valve springs
Faulty valve rotators
Warped or distorted valve stems
"Stretched" valves due to excessive spring tension
Distorted cylinder head
Bent push rods
Carbon build-up on valve seats
Rocker arm failure

PRELIMINARY VALVE TRAIN INSPECTION

Check condition of other visible valve train parts for indication of malfunctions.

Prior to cylinder head removal, inspect and check engine operation

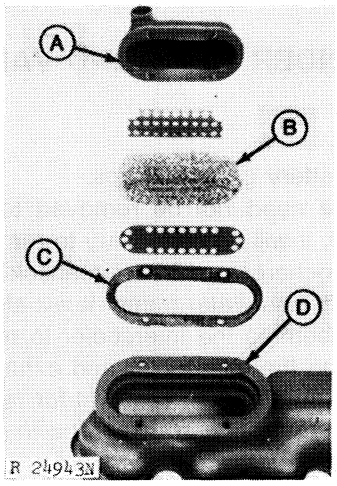

A—Cover
B—Mesh Screen
C—Gasket
D—Rocker Arm Cover

Fig. 1-Vent Tube Oil Separator

Remove rocker arm cover. Check vent tube oil separator for clogging.

Valve Clearance

Check valve clearance. Intake valve clearance should be 0.013 to 0.017 in. (0.33 to 0.43 mm). Exhaust valve clearance should be 0.023 to 0.027 in. (0.58 to 0.68 mm).

Valve Lift Check

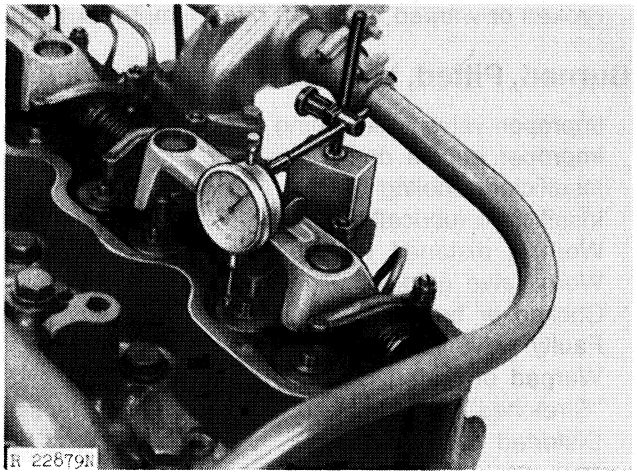

Fig. 2-Checking Valve Lift

Measuring valve lift can give an indication of wear to cam lobes, cam followers and push rods.

Set valve clearance to specifications.

Place dial indicator on rotator. Manually turn engine in running direction with JDE-81 Engine Rotation Tool. After rocker arm contacts valve stem, observe dial indicator reading as valve moves to full open. Specifications are: intake 0.505 to 0.535 inch (12.83 to 13.59 mm) exhaust 0.441 to 0.471 in. (11.20 to 11.96 mm).

CYLINDER HEAD AND VALVES

Removal

Remove battery ground straps.

The engine need not be removed to service the cylinder head. It will be necessary to remove injection nozzles, turbocharger, exhaust manifold, intercooler, water manifold and water pump. It will also be necessary to disassemble the intercooler to reach the cap screws holding the intercooler and exhaust manifold.

Identify all parts during removal for reassembly.

NOTE: Do not rotate crankshaft with cylinder head removed unless all cylinder liners are secured with cap screws and washers.

Repair

Remove three rocker arm shaft clamps (9, Fig. 3) and lift rocker arm shaft assembly from cylinder head.

Remove valve spring retainer locks, retainers, valve springs, rotators and valves. Identify each valve for reassembly into the guide from which it was removed.

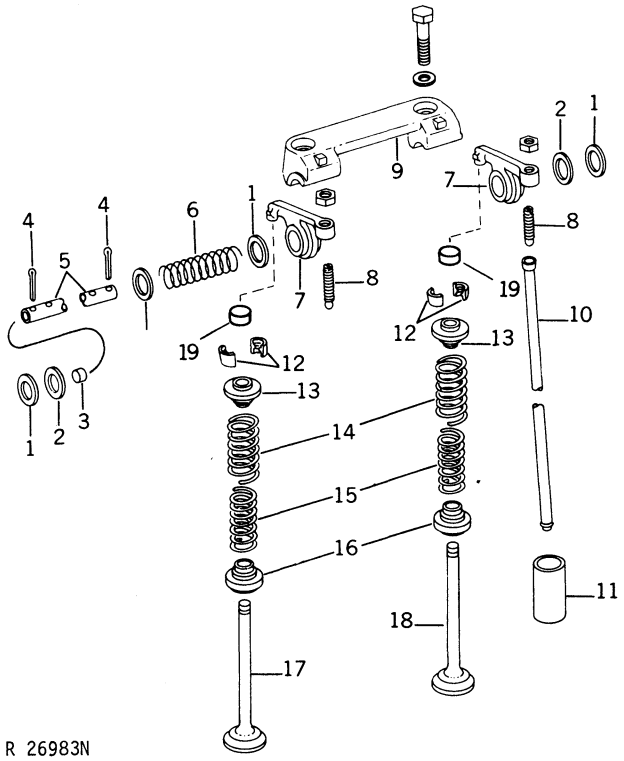

1—Washer (12 used)
2—Spring Washer (2 used)
3—Plug (2 used)
4—Cotter Pin (2 used)
5—Rocker Arm Shaft
6—Spring (5 used)
7—Rocker Arm (12 used)
8—Adjusting Screw (12 used)
9—Rocker Arm Shaft Clamp (3 used)
10—Push Rod (12 used)
11—Cam Follower (12 used)
12—Retainer Lock (24 used)
13—Spring Cap (12 used)
14—Outer Spring (12 used)
15—Inner Spring (12 used)
16—Valve Rotator (12 used)
17—Intake Valve (6 used)
18—Exhaust Valve (6 used)
19—Wear Caps* (12 used)
***(021562-)**

Fig. 3-Valves and Rocker Arm Assembly

Valve Springs

Inspect valve springs for alignment, wear and damage. Place springs on a flat surface to see that they are square and parallel. Do not use springs that are cocked, crooked, broken, or rusty.

Valve Springs—Continued

Check valve spring compression on spring tester. Free length of each spring may differ, but compressed length of each spring must be the same. The following are specified compressed lengths of the springs:

Compressed At	Length
42.2 to 46.2 lbs.—valve closed	1.77 in.—Inner
(187.7 to 205.5 N)	(45.0 mm)
84.7 to 98.3 lbs.—valve open	1.24 in.—Inner
(376.8 to 437.3 N)	(31.5 mm)
162 to 188 lbs.—valve open	1.48 in.—Outer
(721 to 836 N)	(37.6 mm)
70.1 to 78.1 lbs.—valve closed	2.01 in.—Outer
(311.8 to 347.4 N)	(51.1 mm)

Valve Rotators

Inspect valve rotators. If rotators will not turn freely in one direction, replace with new part.

Valve Face and Stem

Check valve face and stem for wear or damage. See "Diagnosing Malfunctions" for causes of valve failure.

New valve specifications are as follows:

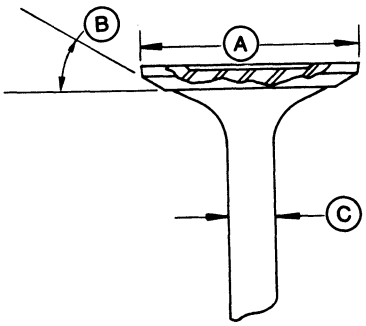

R 24202N

A—2.026 to 2.036 in. (51.46 to 51.71 mm) Intake
1.870 to 1.880 in. (47.50 to 47.75 mm) Exhaust*
1.895 to 1.905 in. (48.13 to 48.387 mm) Exhaust**

B—19.5° - Intake
44.5° - Exhaust*
29.5° - Exhaust**
C—0.4338 to 0.4345 in. (11.018 to 11.036 mm)
***(-E10696)**
****(E10697-)**

Fig. 4-Valve Specifications

Compare valve stem O.D. (C, Fig. 4) with valve guide I.D. (B, Fig. 8) to determine stem-to-guide clearance.

FOS For information on valve refacing, see "Basic Engine" in FOS Manual 30—ENGINES.

Valve Guides

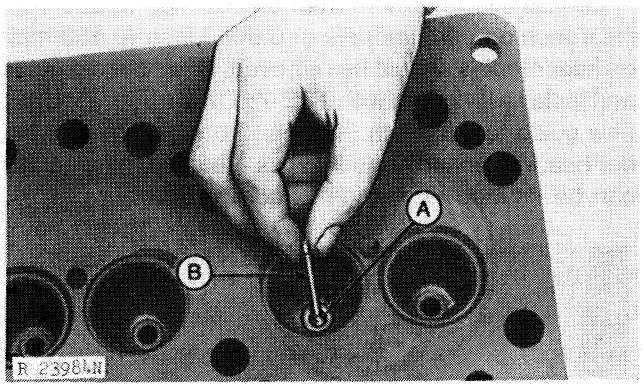

A—Telescope Gauge **B—Valve Guide**

Fig. 5-Checking Valve Guide

Measure valve guides (Fig. 3) for wear. I.D. of a new guide is as follows:

Engines (-E21700)* 0.4365 to 0.4375 in. (11.087 to 11.112 mm)
(E21700-)* 0.4350 to 0.4360 in. (11.049 to 11.074 mm)

Clearance between guide and value stem is as follows:

Engines (-E21700)* 0.0020 to 0.0037 in. (0.051 to 0.094 mm)
(E21701-)* 0.0005 to 0.0022 in. (0.013 to 0.056 mm)

Worn guides can be knurled if they do not allow more than 0.0060 to 0.0080 inch (0.152 to 0.203 mm) clearance in engines (-E21700)* or 0.0040 to 0.0060 inch (0.102 to 0.152 mm) in engines (E21701-)*. Use D-20002WI valve guide knurler EXACTLY as directed by manufacturer.

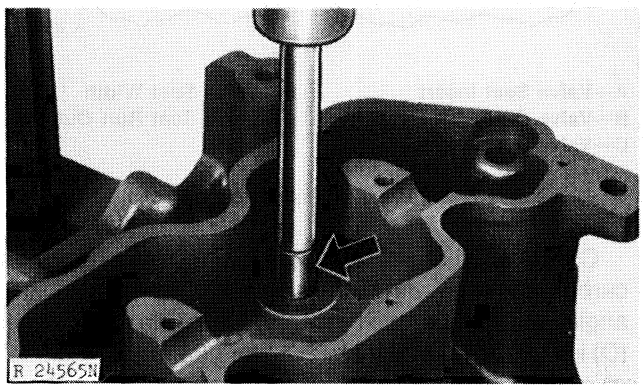

Fig. 6-Removing Valve Guides

*Approximate

Valve Guides—Continued

Guides allowing more than 0.0080 inch (0.203 mm) clearance on early models or 0.0060 inch (0.152 mm) on later models should be removed. Drive out old guide and install new guide with JDE-75 Driver (Fig. 7). Drive new guide to 1.89 inch (48. mm) from bottom of cylinder head. If reconditioned valves are used, new guides can be knurled to provide a more uniform fit.

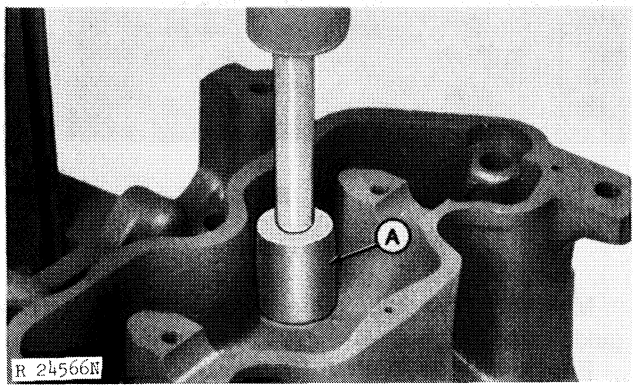

A—Valve Guide Driver

Fig. 7-Installing Valve Guides

Valve Seat Insert

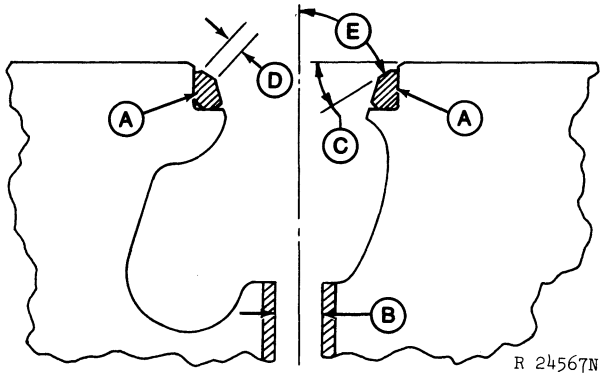

A—Valve Seat Insert
B—Valve Guide I.D.
C—Valve Seat Angle
D—Valve Seat Width
E—Valve Seat Run-Out

Fig. 8-Valve Seat Insert Specifications

Check valve seat inserts (A, Fig. 8) for cracks, pits, carbon deposits and excessive wear. Measure width, angle, and concentricity with valve guide. Seat width (D) is 0.109 to 0.126 inch (2.77 to 3.20 mm). Angle (C) of intake valve seat insert is 20°. Angle (C) of exhaust valve seat insert Serial No. (-E10696) is 45°. Angle of exhaust valve seat insert Serial No. (E10697-) is 30°.

Run-out (E) (concentricity) between guide and insert should be no more than 0.004 inch (0.102 mm).

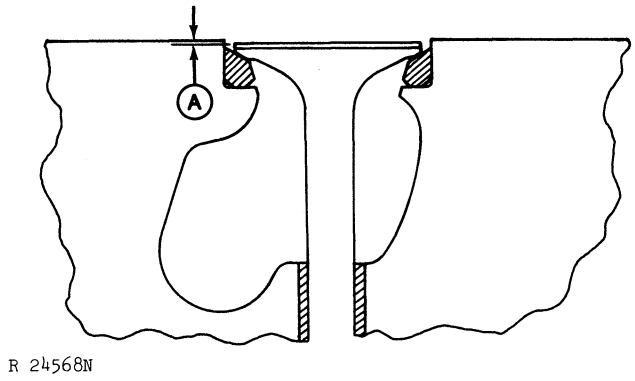

A—Valve Recessed

Fig. 9-Valve Recessed in Cylinder Head

Repair seats as directed in FOS-30 Engines Manual and by directions given by the seat refacing tool manufacturer. On later model engines, intake valves may be recessed in the seat or protruded above cylinder head surface. See Fig. 9 and the following specifications:

New Part

	Engine Serial No. (-010696)	Engine Serial No. (010697-)
Exhaust	0.028 to 0.043 in. (0.73 to 1.09 mm)	0.015 to 0.030 in. (0.40 to 0.76 mm)
Intake	0.005 to 0.019 in. (0.12 to 0.48 mm)	0.003 above to 0.011 in. recessed (0.08 above to 0.28 mm below)

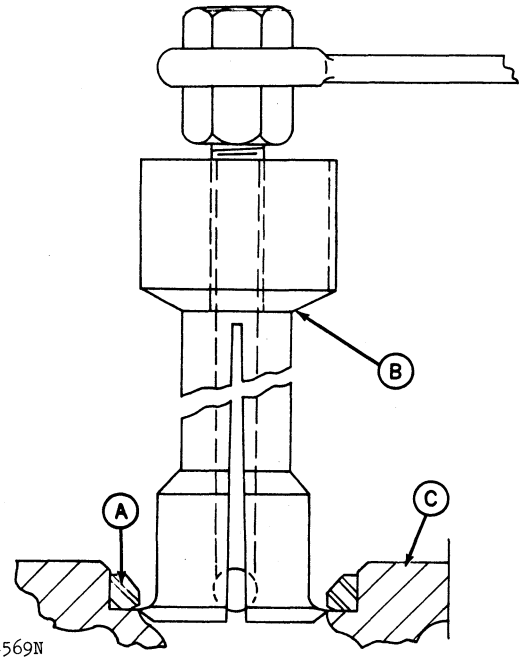

A—Valve Seat Insert
B—Puller
C—Cylinder Head

Fig. 10-Valve Seat Insert Removal

Valve Seat Insert—Continued

If seats are not repairable, use JDE-77 Seat Puller to remove seats. Be careful not to damage cylinder head when removing seats. Use JDE-72 (intake valve seats) and JDE-73 (exhaust valve seats) Valve Seat Driver Sets to install new seats. New seat inserts MUST be chilled to −20°F (−29°C) in dry ice before installing. For easier installation, also chill driver.

Cylinder Head

Inspect cylinder head for flatness, cracks, damage to finished surface and deposits in coolant galleries.

If absolutely necessary, the cylinder head can be reconditioned to restore surface finish or correct flatness. The MAXIMUM amount that can be removed from the cylinder head is 0.030 inch (0.762 mm). Remove ONLY what is necessary to correct damage. Check distance valve is recessed into head after repairs have been made, to insure proper clearance.

Rocker Arm Assembly

Disassemble and examine rocker arms and shaft for unusual signs of wear. Wear could indicate weak valve springs, bent push rods, or loose rocker arm shaft clamps. If rocker arms show only wear, resurface them.

If the rocker arm has been damaged by a valve failure, replace it and the push rod when replacing valves.

Clean holes in rocker arms, rocker arm shaft, and rocker arm mounting brackets to insure proper lubrication of the rocker arm assembly.

Assembly

Assemble parts on rocker arm shaft in sequence removed. Position plugs correctly in each end of the rocker arm shaft.

Apply AR44402 lubricant to valve stems and guides and install valves into guides from which they were removed. Valves must move freely and seat properly.

Install rotators on valve guides with spring seat of rotator away from cylinder head. Install inner and outer valve springs. Be sure that both springs are properly located on the spring seats of the rotators.

Install retainers, retainer locks, and wear caps on valves. "Pop" each valve three or four times with soft mallet to insure proper positioning of the retainer locks.

Installation

If cylinder head is being installed on a new cylinder block, see note on p. 25-15-8.

Install cylinder head gasket dry. Dip cap screws in engine oil before installation. Install cylinder head using hardened flat washers under all cap screws.

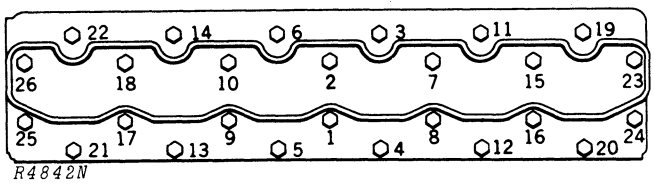

Fig. 11-Cylinder Head Cap Screw Tightening Sequence

Initially tighten cylinder head cap screws evenly to 140 to 160 ft-lbs. (190 to 217 Nm) following sequence shown in Fig. 11. Then tighten to 175 to 185 ft-lbs. (237 to 251 Nm) in same sequence. After engine breakin, retighten to 205 to 215 ft-lbs. (278 to 292 Nm).

Install push rods in holes from which they were removed.

Install rocker arm assembly. Make sure that spring pin in head aligns with pin hole in rocker arm shaft. This will align lubrication holes in shaft and head. Tighten rocker arm shaft clamps to 65 ft-lbs. (88 Nm).

If only cylinder head and valve train service was performed, install remaining parts except the rocker arm cover. Use the following torque specifications:

Item	Torque
Intake Manifold	50 to 60 ft-lbs (68 to 81 Nm)
Intercooler Cover	30 to 40 ft-lbs (41 to 54 Nm)
Injection Nozzles	60 to 70 ft-lbs (81 to 95 Nm)

Valve Clearance Adjustment

The engine may be hot or cold. With JDE81 Engine Rotation Tool, and JDE-81-4 Engine Rotation Tool Pin, set No. 1 piston at "TDC" of its compression stroke.

Valve clearance is 0.013 to 0.017 in. (0.33 to 0.43 mm) on intake valves and 0.023 to 0.027 in. (0.58 to 0.68 mm) on exhaust valves.

Valve Clearance Adjustment—Continued

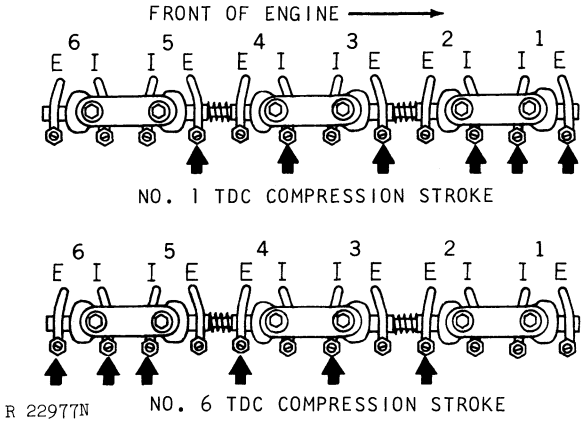

Fig. 12-Valve Clearance Adjustment

Adjust valve clearance on No. 1, 3, and 5 exhaust valves and 1, 2, and 4 intake valves.

Rotate flywheel 360 degrees until No. 6 piston is at "TDC" of its compression stroke.

Adjust valve clearance to the above specifications on No. 2, 4, and 6 exhaust and 3, 5, and 6 intake valves.

CAMSHAFT

Removal

Disconnect battery ground cables.

Remove all parts necessary to remove camshaft. The tractor front end should be separated from the engine. However, cylinder head removal is not necessary unless desired. If camshaft bushing removal is necessary, the engine should be removed and placed in D-01003AA (JDST-32) Repair Stand using D-05001ST (JDG-13) Adapter Plates. Identify parts for reassembly.

NOTE: See Section 10, Group 25 for separation and removal instructions.

Remove crankshaft damper pulley as described in Group 20, of this section.

NOTE: Set No. 1 piston at "TDC" on compression stroke to align timing marks on crankshaft and camshaft gears. This will aid timing on reassembly.

Remove push rods. Use D-15001NU (ND425) Magnetic Holding Tool Set to hold cam followers away from camshaft if the cylinder head hasn't been removed or to remove followers if the head has been removed. If followers are removed, mark them for identification on reassembly.

Remove oil pan and oil pump.

Check camshaft end play before removing camshaft. Place dial indicator on camshaft gear and pry between gear and block. End play should be 0.0025 to 0.0085 inch (0.064 to 0.216 mm). Excessive end play indicates a worn thrust plate, however, end play to 0.0150 inch (0.381 mm) is allowable.

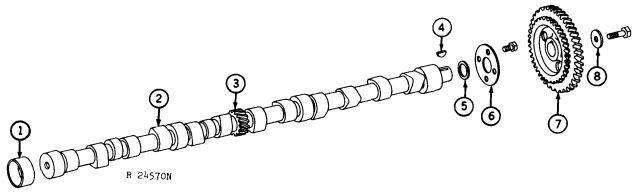

Fig. 13-Camshaft Assembly

1—Camshaft Bushing
2—Camshaft
3—Engine Oil Pump Drive Gear
4—Woodruff Key
5—Spacer
6—Thrust Plate
7—Camshaft Gear
8—Washer

Legend for Figure 13

Carefully remove camshaft from engine. Do not allow camshaft journals to drag through bushings.

Repair

Check thrust plate thickness. New part dimension is 0.1185 to 0.1215-inch (3.010 to 3.086 mm). Thrust plate may be worn to 0.1135-inch (2.883 mm) and still be acceptable. If the thrust plate wear or camshaft end play is excessive, check camshaft lobes and bushings for wear or damage.

Bushings

Examine camshaft journals and bushings for wear. The O.D. of the journals should be 2.3745 to 2.3755 inches (60.312 to 60.338 mm). I.D. of bushing is 2.3775 to 2.3795 inches (60.389 to 60.439 mm). New part oil clearance is 0.0020 to 0.0050 inch (0.051 to 0.127 mm). A maximum clearance of 0.006 in. (0.152 mm) is allowable.

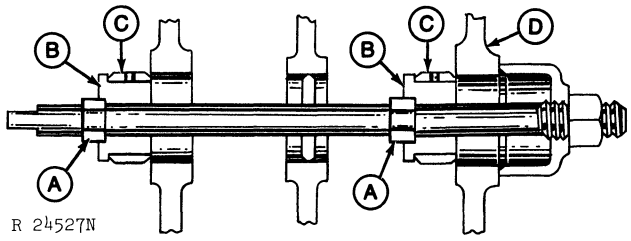

A—Locking Key
B—Mandrel
C—Bushing
D—Engine Block

Fig. 14-Installing Camshaft Bushings

To remove and install camshaft bushings (Fig. 14), use JDE-6 Camshaft Bushing Replacement Set. The first two bushings can be reached from the front of the engine. The flywheel must be removed to reach the other two bushings from the rear of the engine.

When new bushings are installed, be sure that the elongated bushing oil holes are to the top and the round bushing oil holes are aligned with oil holes in the bottom of the bushing bore.

Gears and Lobes

Check camshaft lobes and oil pump drive gear (3, Fig. 13) for wear or damage. Replace camshaft if necessary. If camshaft is replaced due to a damaged oil pump drive gear, check gear and shaft on oil pump for damage and replace as necessary.

Check cam followers for damage. Replace as necessary. If necessary, replace camshaft gear by removing cap screw and washer (8, Fig. 12) and pressing shaft from gear. To install new gear, install spacer (5) and thrust plate (6) and support camshaft under first journal. Face timing mark on gear away from camshaft, install Woodruff Key (4), and press gear on until tight against cam shoulder.

Installation

Use the following torque specifications for reassembly. Torque specifications for engine parts not covered in this group may be found in Group 35 "Specifications and Special Tools."

Item	Torque
Camshaft thrust plate	20 ft-lbs (27 Nm)
Camshaft gear	85 ft-lbs (115 Nm)
Timing gear cover	30 ft-lbs (41 Nm)
Damper pulley to crankshaft	170 ft-lbs (230 Nm)
Damper to damper pulley	35 ft-lbs (47 Nm)
Cylinder head - Initial	140 to 150 ft-lbs (190 to 217 Nm)
- Second	175 to 185 ft-lbs (237 to 251 Nm)
- Final	205 to 215 ft-lbs (278 to 292 Nm)
Rocker arm shaft clamps	65 ft-lbs (88 Nm)
Oil pan to block - 1/2 in.	85 ft-lbs (115 Nm)
- 3/8 in.	35 ft-lbs (47 Nm)

Coat camshaft with high temperature grease such as Texaco "Molytex Grease O" or its equivalent and carefully install camshaft in block.

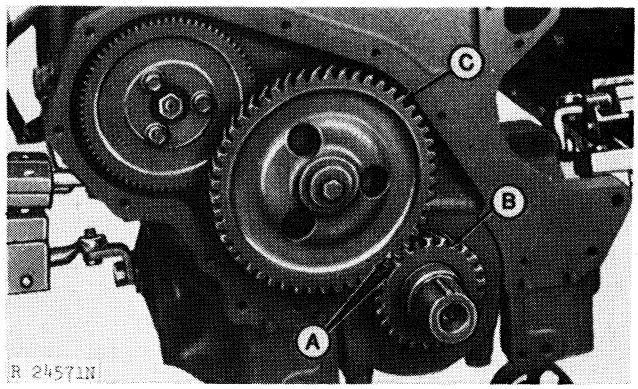

A—Timing Marks **C—Camshaft Gear**
B—Crankshaft Gear

Fig. 15-Camshaft Timing Adjustment

With No. 1 piston on "TDC" of compression stroke, align timing marks on camshaft and crankshaft.

Turn camshaft gear to align thrust plate holes with cylinder block holes. Secure thrust plate, washer, and cap screw in camshaft.

Check camshaft end play.

Install cam followers, cylinder head, push rods, and timing gear cover.

NOTE: Check injection pump timing after cover is installed.

Install remaining tractor parts.

Glue rocker arm cover gasket on rocker arm cover and install.

Litho in U.S.A.

Group 15
CYLINDER BLOCK, LINERS, PISTONS AND RODS

GENERAL INFORMATION

The cylinder block is a one-piece casting equipped with seven main bearings.

Wet sleeve replaceable cylinder liners are used. Two O-rings and a square packing fit in grooves in the cylinder block and around the liner to aid in sealing. The top of the liner is sealed by cylinder head and gasket compression.

The forged aluminum alloy pistons are cam ground and weight-controlled. Each has two compression rings of a keystone design and one oil control ring.

Connecting rods use bronze bushings for the piston pins and replaceable bearing inserts.

DIAGNOSING MALFUNCTIONS

Scuffed or Scored Pistons

Low oil level
Improper operation
Contaminated oil
Improper break-in
Insufficient lubrication
Insufficient cooling
Improper piston-liner clearance
Insufficient ring gap
Coolant leakage in crankcase
Misaligned or bent connecting rod
Improperly installed piston
Incorrect connecting rod bearing clearance
Carbon buildup in ring groove
Worn piston
Distorted cylinder liner
Plugged piston cooling orifice

Mottled, Grayish or Pitted Compression Rings

Internal coolant leaks

Dull Satin Finish and Fine Vertical Scratches on Rings

Dirt and abrasives in air intake system

Worn or Broken Compression Rings and Grooves

Improper timing
Detonation
Insufficient lubrication
Insufficient cooling
Improper ring installation
Improper combustion
Abrasives in combustion chamber
Failure to remove cylinder liner wear ridge (top ring)

Clogged Oil Control Ring

Improper oil
Excessive blow-by
Improper periodic service
Low operating temperature

Stuck Rings

Detonation
Improper oil
Improper periodic service
Poor operating conditions
Coolant leakage in crankcase
Excessive cylinder liner taper

Cylinder Liner Wear and Distortion

Incorrectly installed compression rings
Insufficient lubrication
Uneven cooling around liner
Improper piston-liner clearance
Liner bore damage

Warped Cylinder Block

Insufficient cooling

Broken Connecting Rod

Inadequate piston-liner clearance
Distorted cylinder liner
Piston pin failure

Piston Pin and Snap Ring Failure

Misaligned connecting rod
Excessive crankshaft end play
Incorrect snap ring

Litho in U.S.A.

REMOVAL

Under normal conditions the engine need not be removed from the tractor to service pistons, rods, and liners. If engine removal is desirable, see Section 10, Group 25.

Drain the crankcase and remove oil pan and cylinder head.

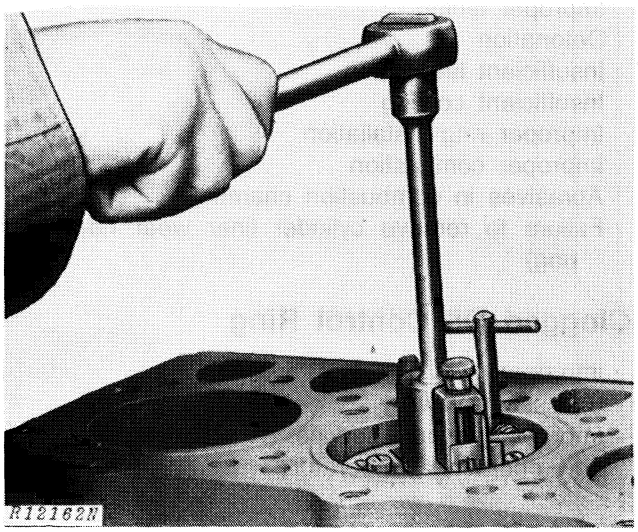

Fig. 1-Removing Ridge from Cylinder Liner Bore

Remove carbon or ridge from liner bore with a ridge reamer.

Do not rotate crankshaft with head removed unless liners are bolted down.

Keep bearing inserts with their respective rods and caps and mark rods, pistons, and caps to assure correct reassembly.

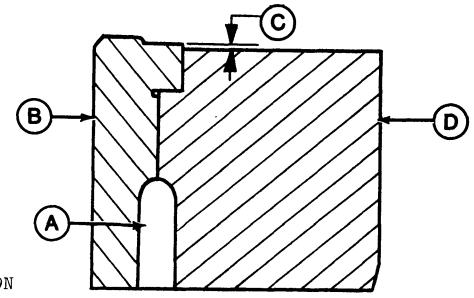

A—Water Passage
B—Cylinder Liner
C—Liner Height Specification
D—Cylinder Block

Fig. 2-Location of Cylinder Liner in Cylinder Block

Measure height (C, Fig. 2) of bolted down liner at several points before removal from cylinder block. Variations in height can give an indication of liner distortion or liner-piston problems. Height should be 0.000 to 0.004 inch (0.000 to 0.102 mm) On later models, liner height should be 0.000 to 0.004 inch (0.000 to 0.102 mm).

REPAIR

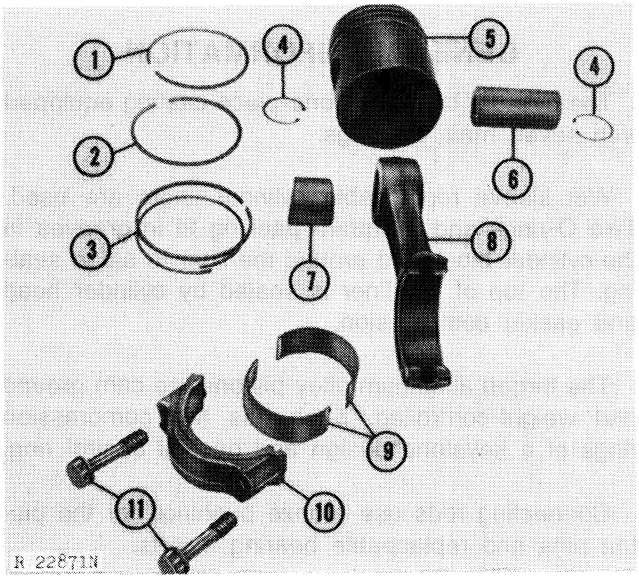

1—#1 Keystone Compression Ring
2—#2 Keystone Compression Ring
3—Oil Control Ring With Expander
4—Snap Ring
5—Piston
6—Piston Pin
7—Piston Pin Bushing
8—Connecting Rod
9—Bearings
10—Connecting Rod Cap
11—Special Cap Screw

Fig. 3-Piston and Connecting Rod Assembly

Pistons

Clean the pistons by using Immersion-Solvent "D-Part" and Hydra-Jet Rinse Gun or Glass Bead Blasting machine.

⚠ CAUTION: Follow manufacturer's instructions exactly. AVOID CONTACT OF CHEMICAL WITH YOUR SKIN OR EYES; chemical contains creosols which can be very harmful.

Using "D-Part" Cleaner

1. Follow manufacturer's directions for handling, mixing and use of cleaner.

2. Use a solvent to remove oil and grease from piston before soaking in cleaner.

3. One or two soakings may be required to loosen carbon and residue from piston.

Litho in U.S.A.

Using "D-Part" Cleaner—Continued

4. IF NECESSARY, LIGHTLY scrape piston to remove some carbon. DO NOT scrape on piston skirt. Be VERY CAREFUL when scraping other parts of piston.

5. Thoroughly rinse piston with water and air after soaking.

Using Glass Bead Blasting Machine

1. Only an experienced operator should use a glass bead blasting machine to clean pistons. Follow manufacture's directions.

2. Remove rings and wash piston in solvent to remove oil and grease. Use a stiff - BUT NOT A WIRE - brush to help loosen some carbon residue. Dry with compressed air.

3. Use the proper sized bead and correct pressure. Do not hold the bead blast in one area too long; keep the blast moving. The distance the blast nozzle is held away from the area will depend on the recommended pressure.

4. Avoid scratching the ring land area. Be sure ring grooves are thoroughly cleaned. Excessive deposits can force rings out, causing scuffing and scoring.

Piston Rings and Ring Grooves

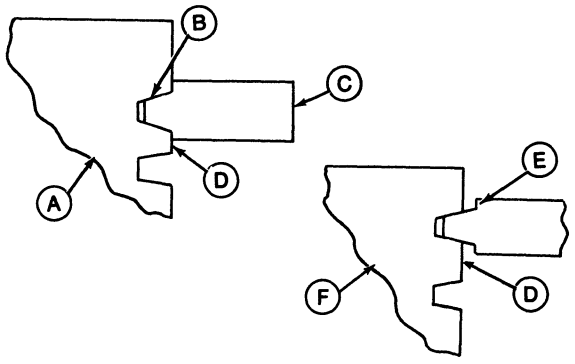

R 24201N

A—Piston with Worn Ring Groove
B—Keystone Ring Groove
C—Ring Groove Wear Gauge
D—Ring Land
E—Gauge Shoulder
F—Piston with Good Ring Groove

Fig. 4-Using Ring Groove Wear Gauge

Examine piston rings for damage, wear, scuffed, scored, or scratched conditions. Damaged rings can give an indication of malfunctions in other areas.

To check keystone ring grooves, use JDE-55 Ring Groove Wear Gauge. Gauge shoulders should not contact ring land of piston.

Oil control ring groove clearance can be checked by inserting new ring in groove and measuring clearance with a feeler gauge at several points. Oil control ring clearance should be 0.0024 to 0.0040 inch (0.061 to 0.102 mm) with a maximum of 0.0065 inch (0.165 mm) allowable.

Piston Head, Ring Lands, and Piston Skirt

Check piston for scuffing, scoring, or signs of overheating. See "Diagnosing Malfunctions".

Carefully examine piston head, ring lands, and skirt for signs of fatigue such as fine cracks in the head, bent or broken lands, or cracks around pin bore in the piston skirt.

Measuring Piston Skirt

Pistons and cylinder liners are selectively fitted to maintain piston-to-cylinder liner clearance. Pistons color-coded green and stamped with an "L" are "low" sized and matched with "low" cylinder liners stamped "LL".

"Medium" sized pistons are color-coded yellow and stamped with an "M". "Medium" sized liners are stamped "MM".

"High" sized pistons are color-coded black and stamped with an "H". "High" sized liners are stamped "HH".

Measuring Piston Skirt—Continued

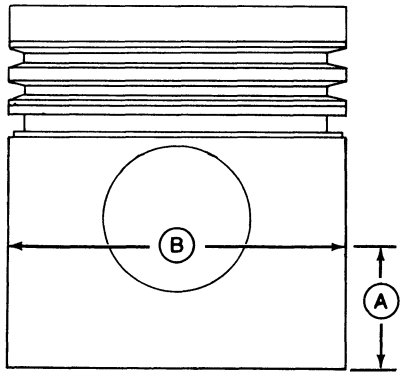

R 29414N

Fig. 5-Measuring Piston Skirt

Measure skirt at right angles to the piston pin bore (Fig. 5); the largest piston diameter. New piston skirt dimensions are as follows:

Fit Point (B, Fig. 5)
1.95 in. (49.53 mm) from bottom of piston (A)

"Low" .....5.1197 to 5.1202 inches (130.04 to 130.05 mm)
"Medium".....5.1202 to 5.1207 inches (130.05 to 130.07 mm)
"High".....5.1207 to 5.1212 inches (130.07 to 130.08 mm)

Cylinder Liners

Measure cylinder liner wear as follows:

1. Measure the liner bore parallel to the piston pin at the top end of ring travel (Fig. 6).

2. Measure bore in same position at bottom end of ring travel.

3. Measure bore at right angle to piston pin at top end of ring travel.

4. Measure bore in same position at bottom end of ring travel.

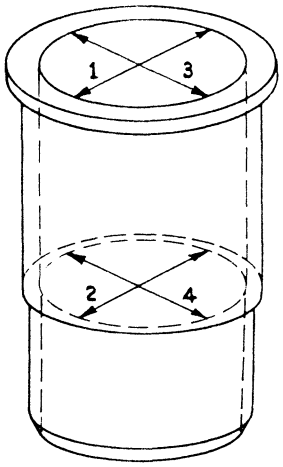

R15649N

Fig. 6-Cylinder Liner Dimension

Compare all four measurements to determine if liner has worn tapered. Liner measurements are as follows:

"Low" .....5.1240 to 5.1246 inches (130.15 to 130.16 mm)
"Medium".....5.1246 to 5.1252 inches (130.16 to 130.18 mm)
"High".....5.1252 to 5.1258 inches (130.18 to 130.20 mm)

Maximum taper is .0015 inch (0.0381 mm)

Fit point-to liner clearance
"Low" .....0.0038 to 0.0049 inches (0.096 to 0.124 mm)
"Medium".....0.0039 to 0.0050 inches (0.099 to 0.127 mm)
"High".....0.0040 to 0.0051 inches (0.102 to 0.130 mm)

If fit point-to-liner clearance is greater than 0.006 in. (0.152 mm), replace piston and liner as a unit.

Deglazing Cylinder Liners

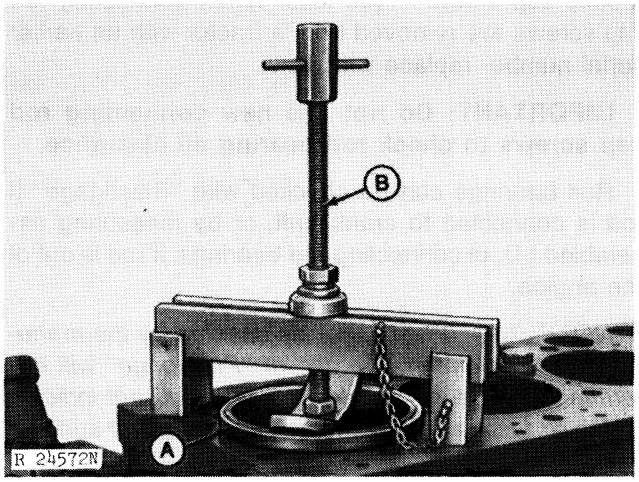

A—Cylinder Liner Flange **B—Removing Tool**

Fig. 7-Removing Cylinder Liner

Use D-01062AA (No. 974) Puller (Fig. 7) to remove liners for cleaning or deglazing. Place liners in a holding fixture while deglazing.

To deglaze liners, use D-17006BR Flex-Hone, or a 180-grit deglazing tool or hone. Operate tool up and down to obtain a 45° crosshatch pattern.

After honing, thoroughly clean liners. First, wipe abrasive residue from liner walls with a dry rag. Then swab out liner as many times as necessary with SAE-10W oil. Continue to clean liner until a clean white rag shows no discoloration.

IMPORTANT: Do not use gasoline, kerosene or commercial solvents to clean liners. Solvents will not remove all the abrasives from liner walls.

FOS

Refer to "Basic Engines" in FOS Manual 30 — ENGINES, for information on deglazing cylinder liners.

Piston Pins

Measuring the piston pin, pin bore in piston, and connecting rod pin bushing can give an indication of excessive wear. However, checks should also be made for wear characteristics such as mis-alignment, taper or bellmouthing in pin bores.

Check pin for out-of-roundness by clamping a pin that is installed in connecting rod, in a vise (carefully). Rotate rod back and forth several times. Remove pin from vise and rod and check rod pin bushing. Rod bushing should show shiny contact over the entire surface.

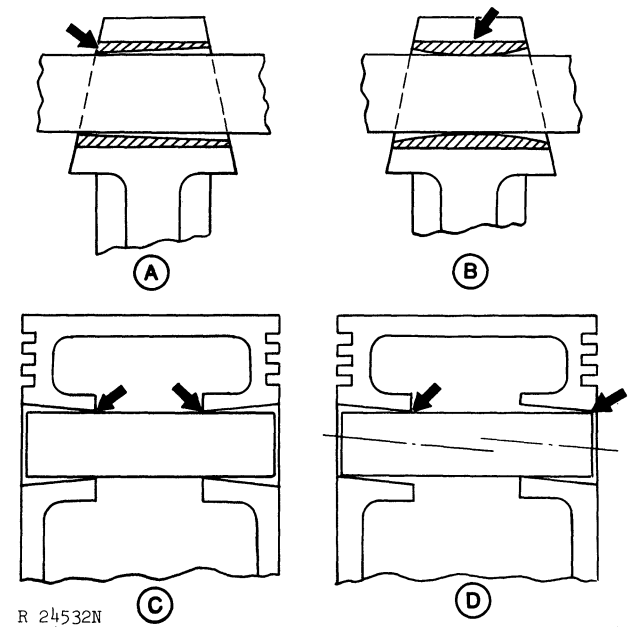

A—Tapered Rod Pin Bushing
B—Bellmouthed Rod Pin Bushing
C—Tapered Pin Bore
D—Mis-aligned Pin Bore

Fig. 8-Piston Pin Wear Failures

Insert pin from either side of the rod bushing. If it is free on one end but tight on the other, the bore could be tapered (Fig. 8). If it enters freely from both sides, but is tight in the center, the bore is bellmouthed (B).

Check taper in piston pin bore by inserting pin from both sides. If pin enters freely, but binds in the center, bore could be tapered (C). If bore is not tapered, insert pin to check for bore alignment. Pin should not "click" or need to be forced into bore on opposite (D).

Specifications are as follows:

O.D. of piston pin . . . . . 1.9989 to 1.9995 in. (50.772 to 50.787 mm)
I.D. of pin bore in piston . . . . . 1.9998 to 2.0000 in. (50.795 to 50.800 mm)
I.D. of rod pin bushing . . . . . 2.0002 to 2.0012 in. (50.800 to 50.830 mm)
Pin-to-bushing oil clearance . . . 0.0007 to 0.0023 in. (0.0178 to 0.0584 mm)

Connecting Rods

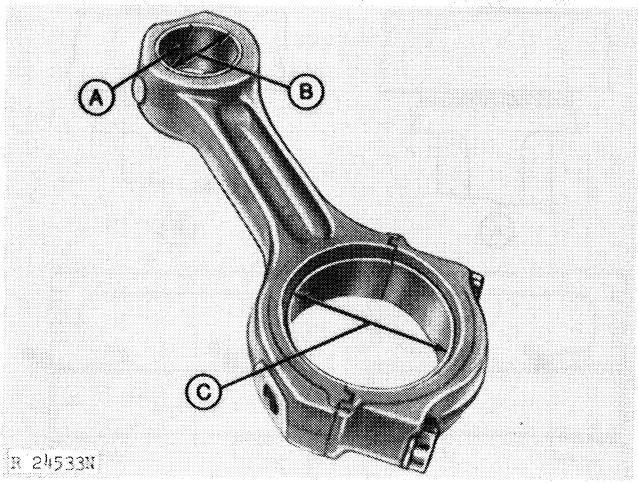

A—Pin Bushing Lubrication Hole **B—Pin Bushing Measurement** **C—Bearing Insert Measurement**

Fig. 9-Connecting Rod Pin Bushing and Bearing Measurement

Check the piston pin bushing in the rod for damage or excessive wear. Compare bushing I.D. (B, Fig. 9) with piston pin for specified clearance. Also, see Figure 8.

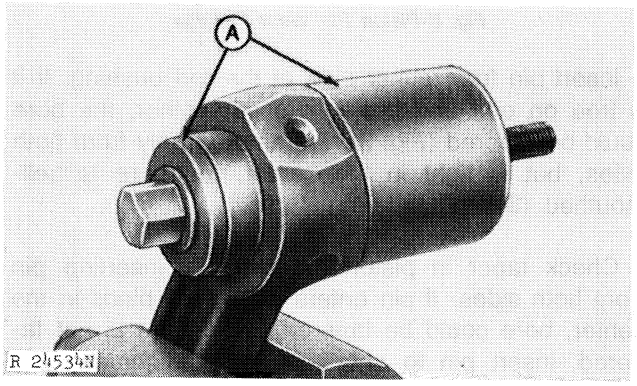

Fig. 10-Removing Pin Bushing

If necessary, remove failed bushing and install new bushing with JDE-98 Piston Pin Bushing Tool (A, Figs. 10 & 11). Be sure that bushing lubrication hole is aligned with hole in connecting rod (B, Fig. 11). Hone installed bushing to a "thumb" press fit with piston pin.

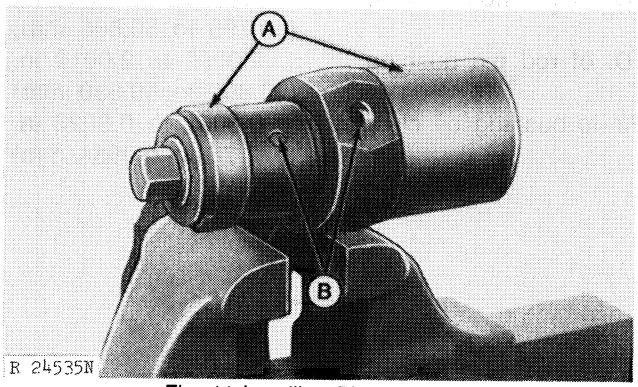

Fig. 11-Installing Pin Bushing

On 8630 Tractors (025181-) zinc phosphate coated connecting rod cap screws were adopted to reduce cap screw torque loss. When connecting rod cap screws are removed from a tractor with an earlier serial number replace with new.

IMPORTANT: Do not use new connecting rod cap screws to check rod bearing oil clearance.

Rod bearings can be checked with "Plastigage" if rod is connected to crankshaft, or by measuring assembled I.D. of connecting rod bearings, if rod is out of the engine.

NOTE: Use "Plastigage" as directed by the manufacturer. Remember, the use of "Plastigage" will determine bearing-journal clearance, but will not indicate which surface is worn or the condition of either surface.

The assembled I.D. of the bearing (Fig. 9) is 3.5004 to 3.5024 inches (88.910 to 88.961 mm). Measuring several places on the crankshaft rod journal, O.D. should be 3.4980 to 3.4990 inches (88.850 to 88.875 mm). Oil clearance is 0.0014 to 0.0044 inch (0.036 to 0.112 mm).

Rod and cap are an assembly; if one is damaged, both must be replaced.

Check assembly for straightness. If piston contact pattern is not centered on center of piston at top and bottom skirt, the rod needs to be straightened.

Cylinder Block

Clean block thoroughly with cleaning solvent or pressure steam cleaning. Make sure all passages and crevices are cleared of sludge, rust and grease. Be sure all coolant passages are cleaned of lime deposits and scale. Clean counterbore for liner flange.

See "Basic Engines" in FOS Manual 30 — ENGINES for Cylinder Block cleaning instructions.

Inspect the block for cracks or damage. Cracks can in some cases, be repaired by the cold weld process.

NOTE: Clean counterbore for liner by scraping or using D-17015BR Cleaning Brush.

Replace dowel pins, pipe plugs and studs as necessary. Coat parts with joint sealing compound before installing.

Piston Cooling Orifices

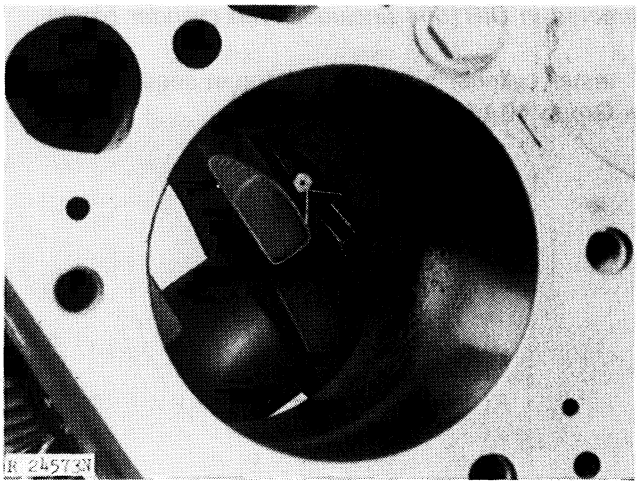

Fig. 12-Piston Cooling Orifice

Check each piston cooling orifice (Fig. 12) for plugged or damaged condition. An orifice failure could cause damage to pistons, piston pins, rod pin bushings, and liners. Replace orifices as necessary. Tighten to 85 to 110 in-lbs (9.60 to 12.43 Nm).

ASSEMBLY AND INSTALLATION

Liners

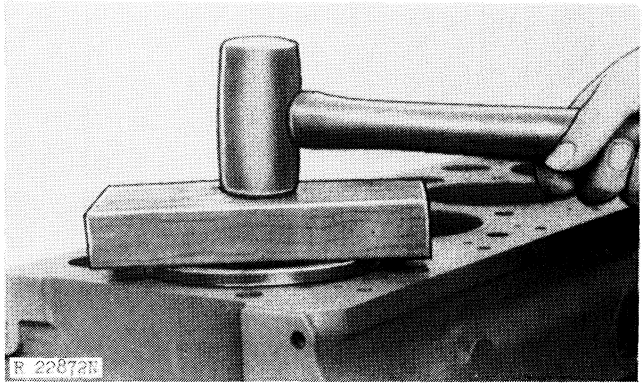

Fig. 13-Installing Cylinder Liner

Be sure liner bore in cylinder block is clean. First, install liner without O-rings and secure with cap screws and washers. Check liner height in several places.

If installation is in new cylinder block, the height of the liner should be 0.001-0.004 inches (0.025-0.102 mm).

If installation is in used cylinder block, the height of the liner should be 0.000-0.004 inches (0.000-0.102 mm).

NOTE: Install liner with the "L-L" or "H-H" mark toward the front of the engine.

Install O-rings in grooves in bore and packing on cylinder liner. Apply AR54749 Lubricating Soap to O-rings and packing.

Work liners in place by hand and seat with wood block and hammer (Fig. 13).

NOTE: Cylinder liner will protrude above the cylinder block more than normal due to uncompressed packing.

Piston and Rod Assembly

Be sure identification marks on piston and rod are in the same position as they were at time of disassembly.

Use a JDE-94 Ring Expander to install rings in their respective grooves.

NOTE: New rings are furnished with the correct end gap; therefore, fitting to the liner is not necessary.

Install expander in oil ring groove. Install the oil ring on the piston with the expander to the top of the piston. Position oil ring gap opposite expander gap.

Coat pistons, liners, and JDE-97 ring compressor (Fig. 12) with engine oil.

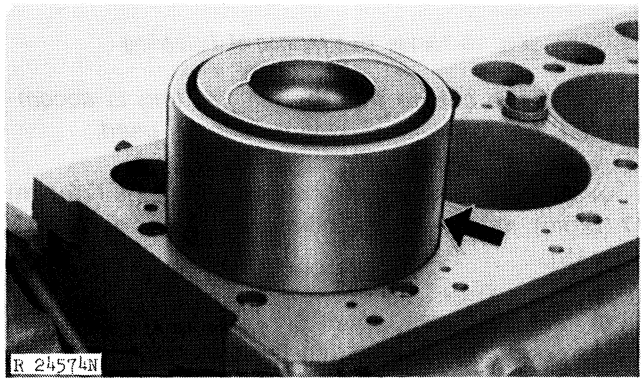

Fig. 14-Installing Piston

Stagger ring gaps on piston and carefully slide ring compressor over piston. Carefully place ring compressor, with piston and rod, over liner. With piston and rings centered, push piston into liner.

NOTE: Be sure the words "front" on head of piston and rod face front of engine.

Apply engine oil to bearing inserts and crankshaft rod of journals. Small tangs on each half of the inserts must fit in recesses in rod and cap.

Use new cap screws when installing connecting rod caps, and tighten using the torque-turn method (see below).

a) Install and tighten cap screws evenly to 55 ft-lbs (75 Nm) (7.5 kgm).

b) Turn each cap screw an additional 1/4 turn (90 + 10 – 0 degrees).

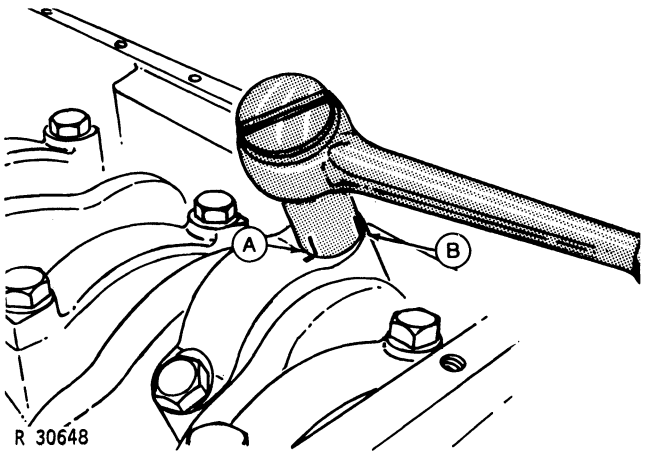

A—Reference Mark **B—90 Degree Mark**

Fig. 15-Torque Turn Method of Tightening

NOTE: To ensure that the full 1/4 turn is accomplished, the following procedure can be used.

c) After tightening cap screws to 55 ft-lbs (75 Nm) (7.5 kgm), mark the connecting rod cap and socket (A, Fig. 15).

d) Make a second mark on the socket (B) 90 degrees counterclockwise from the first mark.

e) Turn 1/4 turn (90 degrees) clockwise until mark (B) is in line with reference mark on cap. This ensures 90 degree rotation of the socket instead of the wrench handle.

Rotate crankshaft several revolutions to be sure there is no binding of parts.

Align oil pan flush with rear face of cylinder block and install cap screws.

NOTE: Cylinder blocks provided for parts use longer cylinder head cap screws. Install cap screws as directed in DIR1564 (included with cylinder block).

Install cylinder head and tighten in sequence given in Group 10 of this Section.

Group 20
CRANKSHAFT, MAIN BEARINGS AND FLYWHEEL

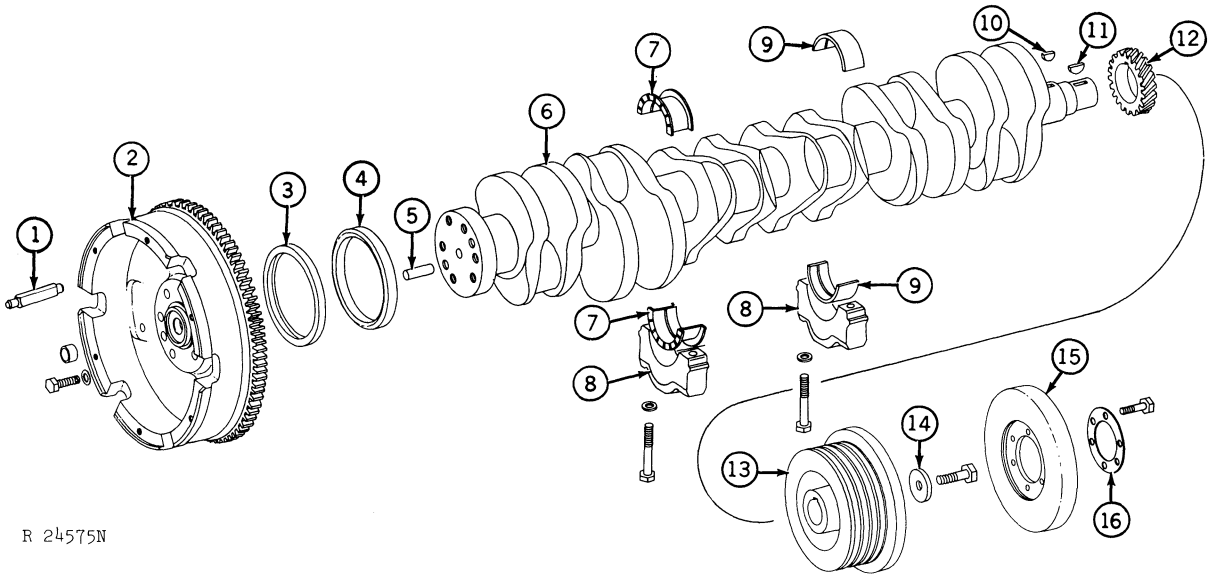

1—Pin
2—Flywheel with Ring Gear
3—Rear Crankshaft Oil Seal
4—Rear Crankshaft Wear Sleeve
5—Dowel Pin
6—Crankshaft
7—Main Thrust Bearing Inserts (1 pair used)
8—Main Bearing Caps
9—Main Bearing Inserts (6 pair used)
10—Woodruff Key
11—Woodruff Key
12—Crankshaft Gear
13—Damper with Pulley
14—Washer
15—Damper
16—Plate

Fig. 1-Crankshaft Assembly

GENERAL INFORMATION

The crankshaft is a dynamically balanced one-piece steel forging. It is supported by seven replaceable main bearings. Crankshaft end thrust is taken up by the third main bearing from the rear.

The crankshaft is drilled for pressure lubrication to all bearings.

DIAGNOSING MALFUNCTIONS

Bearing Insert and Crankshaft Journal Failures

Scored or Galled Surfaces
- Excessive heat
- Poor periodic service
- Fuel in lubricating oil (incomplete combustion)
- Coolant in lubricating oil (cracked block or liner seal failure)
- Insufficient bearing oil clearance
- Wrong bearing insert size
- Bearing inserts and crankshaft journals not lubricated prior to engine operation

Cylinder block oil passages blocked
- Bearing inserts incorrectly installed (oil hole in cap or crankshaft journal blocked)
- Lubrication system failure

Corroded or Pitted Surfaces
- Extreme oil temperature
- Improper operation
- Excessive blow-by
- Contaminated oil (dirt, metal particles, etc.)
- Improper periodic service

Inconsistant Wear Pattern
- Misaligned or bent connecting rod
- Warped or bowed crankshaft
- Tapered crankshaft journals

Litho in U.S.A.

DIAGNOSING MALFUNCTIONS —Continued

Cracked, Chipped, or Broken Bearing Inserts

Improper operation (overspeeding, excessive idling, lugging, etc.)
Excessive oil clearance
Improper installation
Excessive Heat

Broken Main Bearing Caps

Low oil pressure
Low oil level
Improper installation (improper torque, etc.)
Dirt or metal particles between insert and journal
Lubrication system failure

Cracked or Broken Crankshaft

Improper operation (overspeeding, etc.)
Misaligned main bearing bores
Broken main bearing caps
Defective damper assembly
Loose flywheel
Improper engine usage (added belt pulleys, couplings)

REMOVAL

To inspect and repair crankshaft, main bearings, and flywheel, engine must be removed from the tractor. (See Section 10, Group 25 for removal instructions.)

After removing, install engine in D-01003AA (JDST-32) Engine Repair Stand. Use (D-05001ST (JDG-13) Engine Brackets to attach engine to stand.

Checking Crankshaft End Play

Prior to engine disassembly, check crankshaft end play. Excessive end play can give an indication of worn thrust bearings. Too little end play can be the result of misaligned thrust bearings or contaminants between bearing flanges and crankshaft throw.

Use the following procedure:

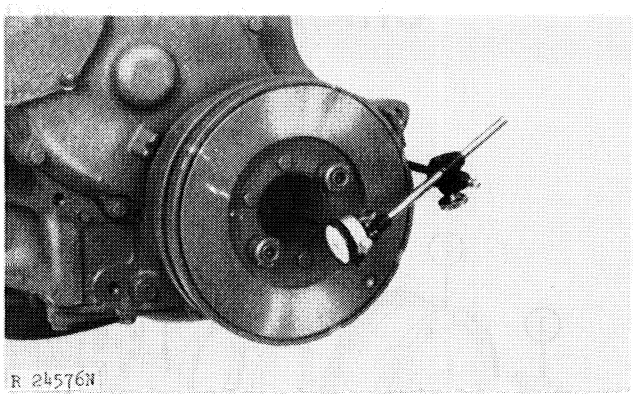

Fig. 2-Checking Crankshaft End Play

1. Place a dial indicator on crankshaft damper or on end of crankshaft if damper and timing gear cover have been removed.

2. Move the crankshaft against and away from the dial indicator. Use care to prevent damage to main bearings, timing gear cover, or damper.

3. New part end play should be 0.0040 to 0.0100 inch (0.102 to 0.254 mm). If end play is not within specifications, examine crankshaft and main bearing thrust washers.

Disassembly

Remove clutch assembly.

Remove flywheel.

Remove oil pan and oil pump.

Remove rear crankshaft oil seal housing.

Remove connecting rods caps.

Remove damper-pulley assembly and timing gear cover.

INSPECTION AND REPAIR

Flywheel

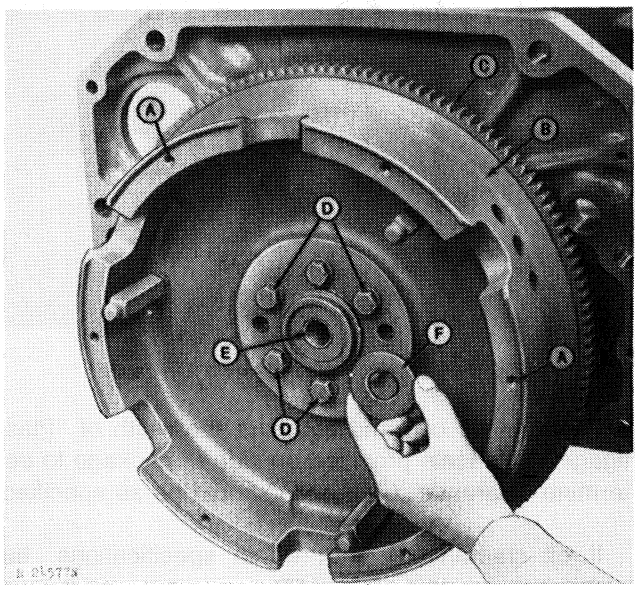

A—Clutch Mounting Hole **D—Crankshaft Mounting Hole**
B—Flywheel **E—Clutch Shaft Pilot Bushing**
C—Ring Gear **F—Thrust Washer**

Fig. 3-Flywheel Assembly

Check flywheel for cracks or damage, particularly around clutch mounting (A, Fig. 2) and crankshaft mounting (D) holes. Replace flywheel as necessary.

Examine flywheel ring gear (C) for chipped or broken teeth. Ring gear is usually removed from flywheel only if the gear needs to be replaced. Place flywheel on a solid flat surface and drive ring gear off with a brass drift and hammer.

⚠ CAUTION: Oil fumes or oil can ignite above 380°F (193°C). Use a thermometer and do not exceed 360°F (182°C). Do not allow a flame or heating element to be in direct contact with the oil. Heat the oil in a well-ventilated area. Plan a safe handling procedure to avoid burns.

To install new ring gear, heat to 300°F (148°C) using either heated oil, dry oven heat, or flame heat (if flame heat is used, be sure gear is heated uniformly around circumference). DO NOT OVERHEAT. SEE CAUTION. Also, overheating may destroy original heat treatment of gear.

Tap heated gear into place against flywheel shoulder. Be sure that gear circumference is against shoulder.

Check clutch shaft pilot bushing (E, Fig. 3) and thrust washer (F) for excessive wear or damage. Bushing I.D. is 1.0035 to 1.0045 inches (2.5490 to 2.5514 cm). Thrust washer thickness is 0.1850 to 0.1890 inch (4.70 to 4.80 mm). If necessary, remove old bushing and drive new bushing into flywheel until it bottoms.

On some models the bushing is pressed into a sleeve. The sleeve should not be removed unless it is damaged. If necessary, remove old sleeve and press new sleeve flush to 0.020 inch (flush to 0.051 mm) below the flywheel surface.

To replace the bushing on sleeveless models, remove the old bushing and press the new bushing flush to 0.020 inch (flush to 0.051 mm) below the flywheel surface. On models with the sleeve, press the bushing flush to 0.020 inch (flush to 0.051 mm) below the sleeve surface.

Rear Crankshaft Oil Seal, Housing and Wear Sleeve

Check rear crankshaft oil seal for damage or leaking. Replace with lip-type oil seal, wear sleeve and housing.

To remove wear sleeve score LIGHTLY with a dull chisel. Do NOT score too deeply, or the crankshaft rear flange might be damaged.

Inspect the crankshaft flange for burrs or nicks. If necessary, clean flange with light file and fine emery cloth.

Main Bearings

A drop in oil pressure, excessive oil consumption, engine knock, or excessive crankshaft end play are indications of main bearing and main thrust bearing failures.

Remove main bearing caps and examine main bearing inserts for excessive wear, scoring, or damage. See possible causes of main bearing failure provided in "Diagnosing Malfunctions".

NOTE: Main bearing caps are numbered for reassembly on the same numbered main bearing bosses. Identify bearing inserts for comparison with crankshaft journals.

Main bearing oil clearance can be determined by measuring the assembled I.D. of bearings and O.D. of crankshaft journal or with the use of "Plastigage".

Measuring Bearings and Journals with Micrometer

With crankshaft out of engine, install main bearing inserts and caps (be sure inserts are installed correctly). Tight main bearing cap screws to 205 to 215 ft-lbs (278 to 292 Nm).

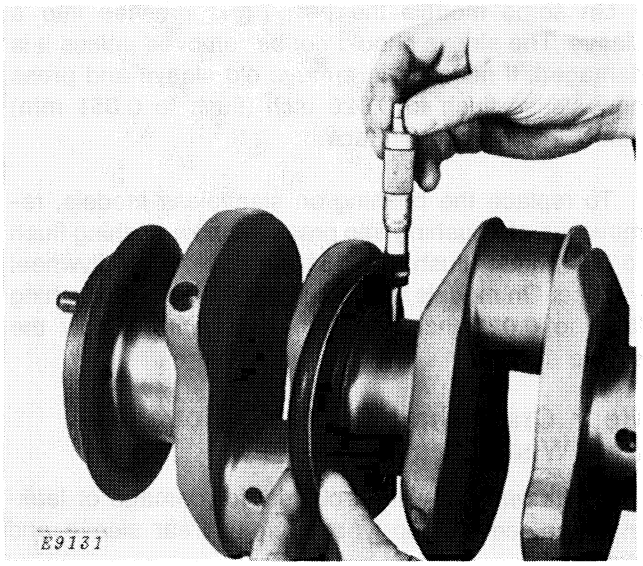

Fig. 4-Measuring Crankshaft Journal

Measure bearing I.D. Measure crankshaft journal O.D. at several points around journal. Compare the two measurements with the following specifications:

O.D. of main bearing journal . . 3.7480 to 3.7490 in. (95.199 to 95.225 mm)
I.D. of main bearing (assembled) . 3.7508 to 3.7528 in. (95.270 to 95.321 mm)
Clearance . . . . . 0.0018 to 0.0048 in. (0.046 to 0.122 mm)

NOTE: If engine had previous major overhaul and undersized bearing inserts were used, above listed I.D. and O.D. dimensions may not be the same as those recorded. However, oil clearance should be within specifications.

Measuring with "Plastigage"

Remove main bearing cap and place a strip of "Plastigage" in the center of the cap (about 3/4 of the width of the bearing). Install cap and tighten to 205 to 215 ft-lbs (278 to 292 Nm).

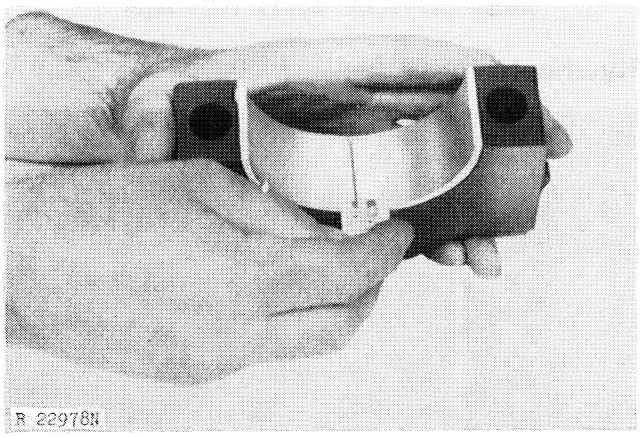

Fig. 5-Determining Main Bearing Clearance

Remove the cap and compare the width of "Plastigage" with scale provided on side of package to determine clearance. Clearance should be as specified.

If oil clearance is not within specifications, but crankshaft journals show only even wear, dress journals and select the proper undersize bearing inserts. Undersize inserts are available in 0.002, 0.010, 0.020, and 0.030 inch) 0.05, 0.25, 0.50, and 0.75 mm) sizes.

NOTE: If undersize bearings are used, check bearing clearance after bearing caps have been tightened to specified torque. If undersize bearings are too tight and clearance is not within specifications, the journal and bearing will be wiped clean of oil, resulting in premature wear on parts.

Crankshaft Journals

Use crankshaft journal O.D. measurements to determine if journal is out-of-round or has worn tapered. See following specifications:

Journal taper per inch of journal length . . . . . 0.0001 in. (0.0025 mm)
Journal out-of-roundness . . . . . 0.0040 in. (0.102 mm)

If journals have worn tapered or out-of-round or are scored or damaged, the crankshaft should be ground and proper undersize bearing inserts should be installed.

IMPORTANT: Crankshaft grinding should be done ONLY by experienced personnel on equipment capable of maintaining crankshaft size and finish specifications.

Thrust Bearing Inserts

Examine crankshaft thrust surfaces and flanges on thrust bearing inserts for excessive wear or damage.

If crankshaft end play is excessive, dress thrust surfaces and install new regular size or oversize thrust bearing inserts. End play should be 0.0040 to 0.0100 inch (0.102 to 0.254 mm).

Check piston cooling orifices to be sure they are tight and not plugged or damaged.

Damper Assembly

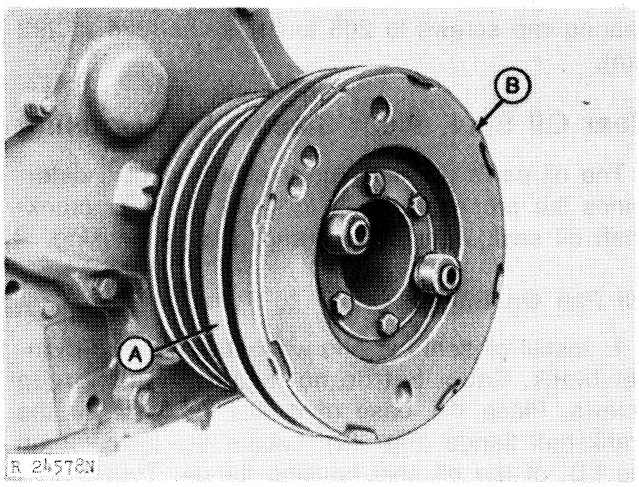

A—Damper with Pulley **B—Damper**

Fig. 6-Damper Assembly

Examine both damper and damper pulley for signs of eccentricity, wobble, or damage at attaching points. If either has failed, check crankshaft for cracks or defects.

Neither damper is repairable. Both should be replaced, regardless of condition, at time of a major overhaul.

Carefully remove damper and damper pulley. DO NOT strike with hammer during removal or installation. When installing, be sure that damper pulley is secure to the crankshaft and the damper is secured to the damper pulley. Tighten damper pulley to crankshaft to 170 ft-lbs (230 Nm) and damper to damper pulley to 35 ft-lbs (47 Nm).

Front Oil Seal, Wear Sleeve, and Crankshaft Gear

Examine front crankshaft oil seal in timing gear cover for damage or leaking.

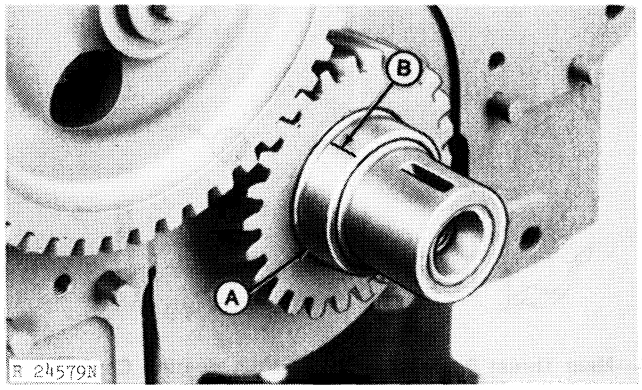

A—Front Wear Sleeve **B—Score Lightly**

Fig. 7-Removing Front Wear Sleeve

If front crankshaft wear sleeve must be replaced due to damage or scoring, remove by scoring LIGHTLY with a dull chisel. DO NOT score too deeply. Inspect crankshaft flange for burrs or nicks. If necessary, clean up flange with a light file and fine emory cloth.

⚠ CAUTION: Oil fumes or oil can ignite above 380°F (182°C). Do not allow a flame or heating element to be in direct contact with the oil. Heat the oil in a well-ventilated area. Plan a safe handling procedure to avoid burns.

Check crankshaft gear for wear or damage. If necessary, remove old gear with knife edge puller. Heat new gear to 360°F (182°C) (don't overheat). With Woodruff Key in place and gear timing mark visible, place the gear on the crankshaft. Seat with JDH-7 Driver.

ASSEMBLY

Main Bearing Installation

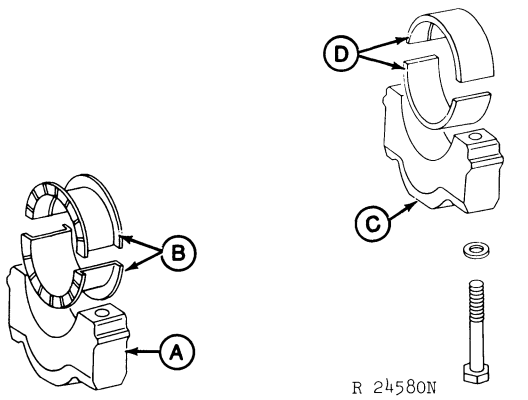

A—Main Thrust Bearing Cap
B—Main Thrust Bearing Inserts
C—Main Bearing Cap
D—Main Bearing Inserts

Fig. 8-Main Bearing Assembly

Install main bearing inserts as shown in Fig. 8. Be sure thrust bearing insert is installed in correct bore. Make sure the tangs on all bearings hit recesses in bores and that oil holes line up with oil passages in block.

NOTE: For parts and on later model engines, the oil hole in the upper half of the main bearing insert is elongated for easier alignment with block oil passages.

Apply a film of clean light oil to bearing surfaces and to crankshaft main bearing journals.

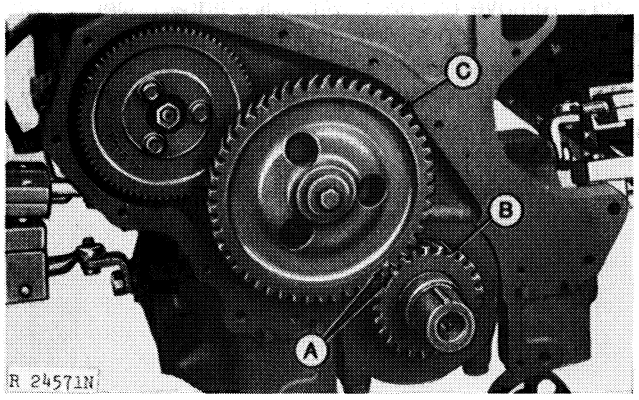

A—Timing Marks
B—Crankshaft Drive Gear
C—Camshaft Gear

Fig. 9-Aligning Timing Marks

Install crankshaft and align crankshaft and camshaft timing marks.

Install each bearing cap with the recesses and tabs toward the same side of the engine as those on the respective upper bearings in the block. Also make sure bearing caps are installed on the bearing bosses from which they were removed. The numbers stamped on the caps should be on the same side as the numbers on the block and in sequence.

Before tightening cap screws on main bearing caps, align upper and lower thrust flanges on main thrust bearings. Tap the crankshaft to the rear and then to the front to line up the flanges. Tighten main bearing cap screws to 205 to 215 ft-lbs (278 to 292 Nm).

Rear Oil Seal, Wear Sleeve, and Housing

The oil pan's position, on or off the engine determines the procedure used to install the rear crankshaft oil seal, wear sleeve, and oil seal housing.

Oil Pan On Engine

1. Install oil seal housing without oil seal on cylinder block. Snug, but do not tighten housing cap screws. Place the base of a dial indicator on the crankshaft flange (Fig. 12). Locate the indicator on the I.D. of the oil seal housing flange. Turn crankshaft and check housing bore run-out. Run-out should be within 0.0060 inch (0.152 mm). Tap housing to bring into specifications. Tighten housing cap screws to 20 ft-lbs (27 Nm).

2. Install JDE-34-1 Guide on the crankshaft flange. Lubricate the seal with engine oil and slide the wear sleeve into the seal with the O.D. chamfer of the sleeve away from the spring side of the oil seal.

NOTE: If the crankshaft flange was filed, use a LIGHT coat of Permatex on the flange before installing wear sleeve. Be sure that excess Permatex is removed and no Permatex comes in contact with new oil seal.

3. Carefully slide seal-and-sleeve assembly on the guide. Be sure that it is not cocked on the guide. Sleeve O.D. chamfer should be toward the rear of the tractor. Use JDE-68 Driver to drive assembly onto the crankshaft flange until the driver bottoms on the oil seal housing flange.

Oil Pan Not On Engine

1. Install JDE-34-1 Guide on the crankshaft flange. Slide the wear sleeve onto the guide with O.D. chamfer toward the rear of the tractor. Drive the sleeve onto the flange with JDE-68 Driver until driver bottoms on the guide. Remove guide.

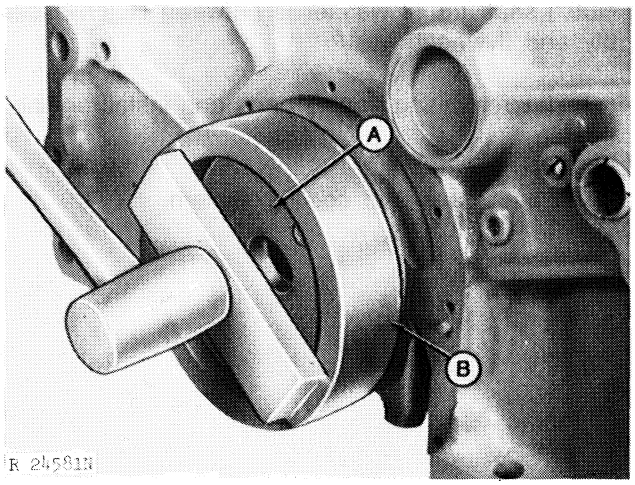

A—Guide **B—Driver**

Fig. 10-Installing Wear Sleeve

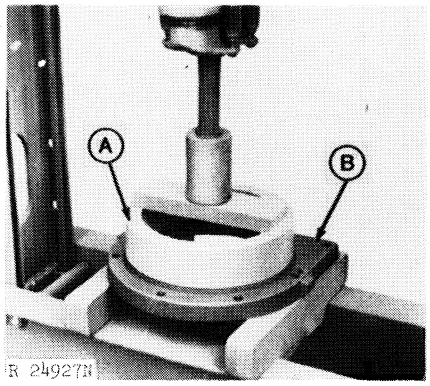

A—Driver **B—Oil Seal Housing**

Fig. 11-Installing Oil Seal

2. Support the oil seal housing as close to the seal bore as possible. Start seal by hand, then press in with JDE-68 Driver until driver bottoms on the housing flange. Spring side of seal should be away from flange side of housing.

3. Lubricate seal lip with engine oil and carefully work seal and housing over wear sleeve. Start at the bottom of the flange and work around. Snug, but do not tighten, housing cap screws.

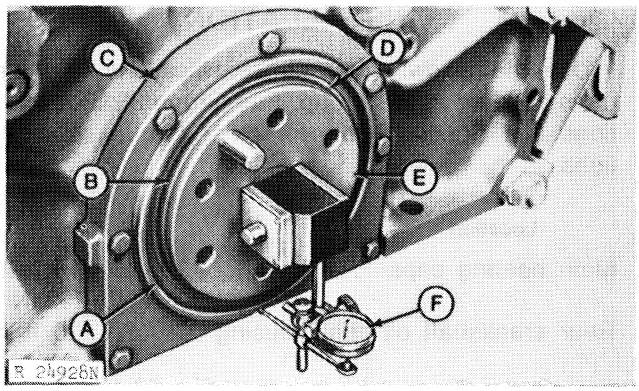

A—Oil Seal Housing Flange
B—Wear Sleeve
C—Oil Seal Housing
D—Oil Seal
E—Crankshaft Flange
F—Dial Indicator

Fig. 12-Checking Oil Seal Housing Run-Out

4. Attach the base of a dial indicator to the crankshaft flange face. Locate the indicator on the O.D. of the oil seal housing flange. Turn the crankshaft and check housing bore run-out. Run-out should be within 0.006 inch (0.152 mm). Tap housing to bring into specifications. Tighten housing cap screws to 20 ft-lbs (27 Nm).

Front Oil Seal and Wear Sleeve

Lightly coat the I.D. of a new wear sleeve with Permatex sealer. Carefully drive new sleeve onto crankshaft flange with JDE-3 Driver until driver bottoms on front of crankshaft. Remove any excess sealer before installing oil seal.

Support timing gear cover around front oil seal bore. Use disks from D-01045AA (#27797) Bushing Driver Set to press closed end of oil seal into bore. The closed end of the seal should be a maximum of 0.010 inch (0.254 mm) from inside of seal bore flange.

INSTALLATION

Use the following torque specifications to install parts covered in this group. See Group 35, Specifications and Special Tools for other torque specifications.

Location	Torque
Main bearing caps	205 to 215 ft-lbs (278 to 292 Nm)
Rear crankshaft oil seal housing	20 ft-lbs (27 Nm)
Flywheel to crankshaft	130 ft-lbs (176 Nm)
Oil pan to block - 1/2 in.	85 ft-lbs (115 Nm)
- 3/8 in.	35 ft-lbs (47 Nm)
Damper pulley to crankshaft	170 ft-lbs (230 Nm)
Damper to damper pulley	35 ft-lbs (47 Nm)

Install pistons and connecting rods, engine oil pump, and oil pan.

Install flywheel to crankshaft. Tighten cap screws to specified torque.

Install clutch assembly to flywheel. Be sure that clutch shaft thrust washer is between clutch assembly and flywheel.

Install remaining engine parts and install engine in tractor.

Fill crankcase and cooling system.

Litho in U.S.A.

Group 25
LUBRICATION SYSTEM

GENERAL INFORMATION

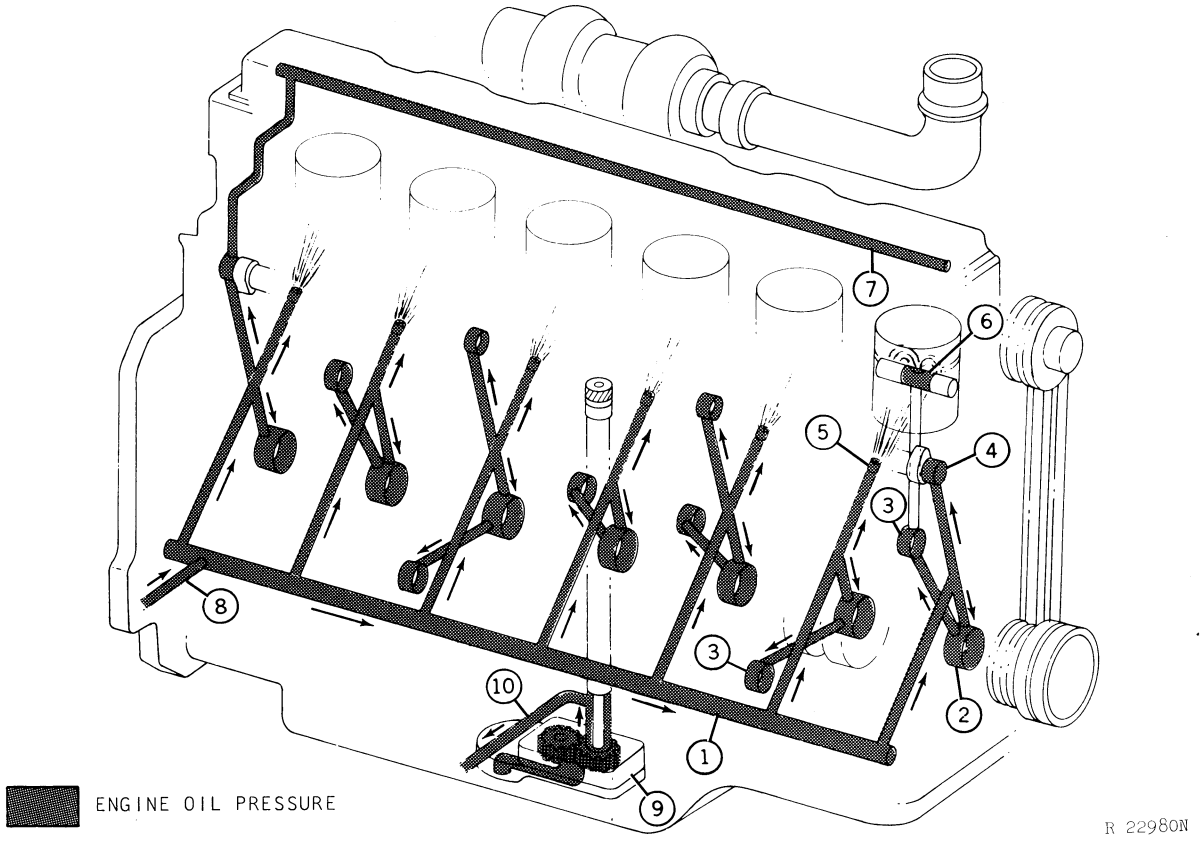

1—Main Oil Gallery
2—Main Bearings (7)
3—Connecting Rod Bearings (6)
4—Camshaft Bushings (4)
5—Piston Cooling Orifices (6)
6—Connecting Rod Pin Bushings (6)
7—Rocker Arm Shaft
8—Inlet From Oil Pressure Regulating Valve Housing
9—Engine Oil Pump
10—Outlet to Oil Pressure Regulating Valve Housing

Fig. 1-Engine Oil Flow

The engine lubrication system consists of a gear-driven positive displacement pump (9, Fig. 1), an oil pressure regulating housing containing filter, filter relief valve, pressure regulating valve and oil cooler relief valve and an oil cooler.

Oil is pumped from the oil pan by the engine oil pump into the oil pressure regulating valve housing, through the oil cooler and filter and into the main oil gallery in the cylinder block (1). Oil is then distributed, under pressure, to each main bearing fillet and piston cooling orifice (5).

Drilled passages in the crankshaft distribute oil from the main bearing journals to the connecting rod journals to lubricate connecting rod bearings (3). Numbers 1, 3, 5, and 7 main bearing fillets are also drilled to lubricate the four camshaft bushings (4). A drilled passage from the rear camshaft bushing through the cylinder block and cylinder head provides lubrication to the rocker arm shaft.

The piston cooling orifices (5) spray oil to cool pistons and liners and lubricate the connecting rod piston pin bushings through an oil cup (6) in the top of the connecting rod.

Litho in U.S.A.

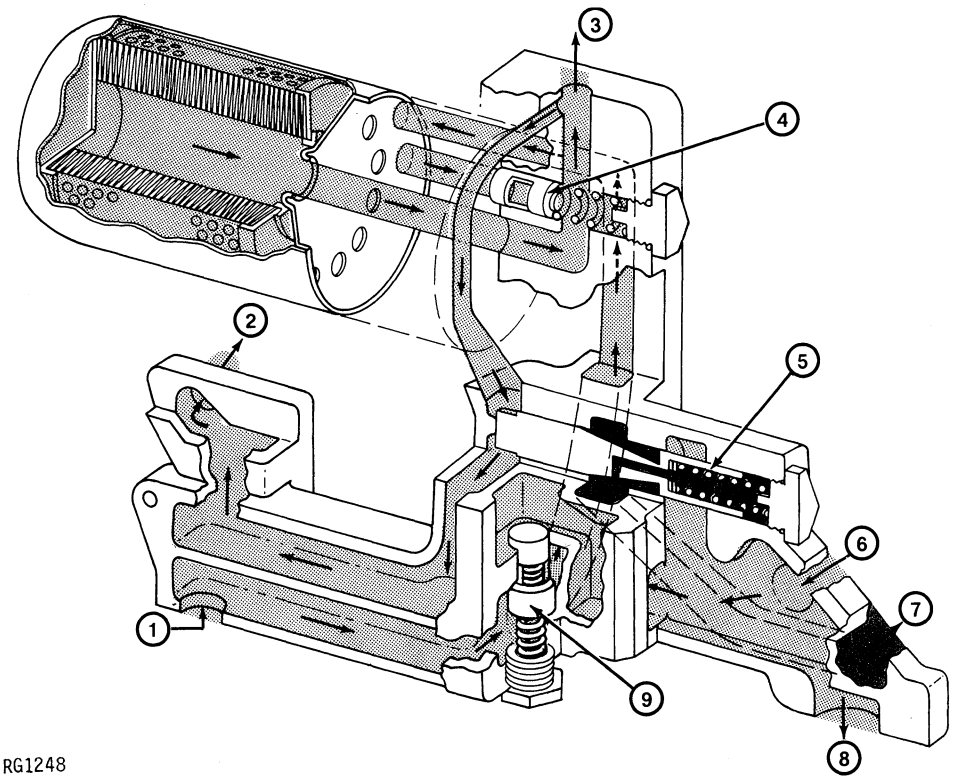

1—From Oil Cooler
2—To Main Oil Gallery
3—To Turbocharger
4—Filter Bypass Valve
5—Pressure Regulating Valve
6—From Oil Pump
7—To Oil Pan
8—To Oil Cooler
9—Cooler Bypass Valve
Return Oil
Engine Oil Pressure

Fig. 2-Oil Pressure Regulating Valve Housing Flow

Oil Pressure Regulating Valve Housing Operation

As shown in Fig. 2, engine oil is pumped into the oil pressure regulating valve housing (6, Fig. 1), through the oil cooler and back into the housing. The oil then flows through the oil filter, down across the pressure regulating valve (5) and into the main oil gallery (2) in the cylinder block.

During cold weather starting or if the oil cooler is plugged, the oil cooler bypass valve (9) senses pressure on the inlet side of the oil cooler and opens, allowing oil to flow directly to the oil filter and cylinder block.

The oil filter bypass valve (4) senses pressure on the outside of the filter and opens when the pressure is 30 psi (2.07 bar) or greater than on the filtered side of the system. This allows unfiltered oil into the cylinder block and insures engine lubrication.

The oil pressure regulating valve (5) maintains a specified 40 to 55 psi (2.76 to 3.79 bar). If pressure is greater than specified on the filtered side of the housing, the valve opens, allowing oil on the inlet side to return to the oil pan (7), thus reducing pressure.

An oil line from (7) the top of the oil pressure regulating valve housing insures lubrication to the turbocharger.

DIAGNOSING MALFUNCTIONS

Low Oil Pressure

Low oil level
Improper oil
Excessive oil temperature
Oil pressure regulating valve failure
Excessive clearance between oil pump gears and cover
Clogged oil pump screen
Excessive main bearing clearance
Clogged oil cooler or filter

High Oil Pressure

Wrong oil viscosity
Clogged oil lines, cooler, or filter
Oil pressure regulating valve failure

DIAGNOSING MALFUNCTIONS —Continued

Oil Sludge and Dilution

Excessive oil temperature
Improper operation
Coolant leakage into lubrication system
Incomplete combustion

CHECKING ENGINE OIL PRESSURE

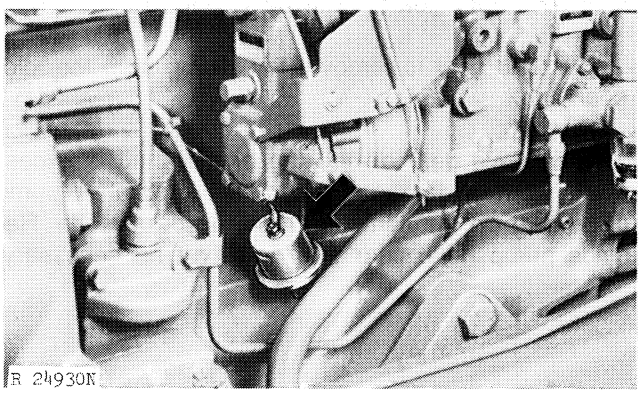

Fig. 3-Oil Pressure Gauge Installation

If possible, check engine oil pressure prior to disassembly. Remove pressure sensing switch shown in Fig. 3 and install a 0-100 psi (0-7 Bar) pressure gauge.

Operate engine at 1900 rpm and check for specified oil pressure of 40 to 55 psi (2.75 to 3.79 Bar). If specified pressure is not indicated, check "Diagnosing Malfunctions" or adjust oil pressure regulating valve.

OIL PRESSURE REGULATING HOUSING REPAIR

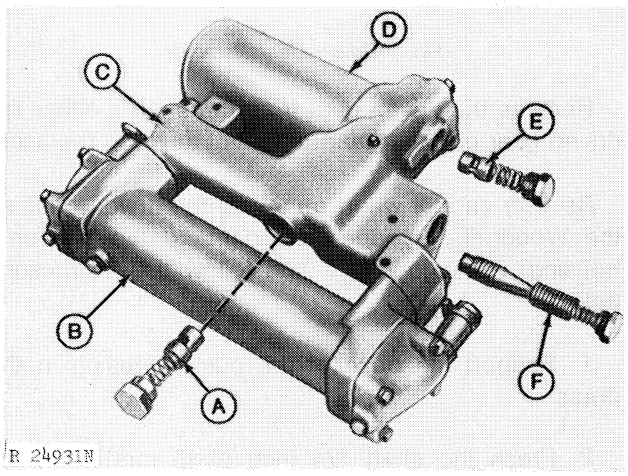

Fig. 4-Oil pressure Regulating Housing and Cooler

A—Oil Cooler Bypass Valve
B—Oil Cooler
C—Oil Pressure Regulating Valve Housing
D—Oil Filter
E—Oil Filter Bypass Valve
F—Oil Pressure Regulating Valve

Legend for Figure 4

Examine oil pressure regulating housing (C, Fig. 4) and oil cooler (3) for leaks or cracks. Remove filter bypass, cooler bypass, and oil pressure regulating valves and valve springs. Check valves for scoring and valve springs for proper tension. Compare with valve spring specifications.

Filter relief valve spring
Compressed at
18 to 22 lbs. (80 to 97.7 N) force 1.38 in. (35.1 mm)
Cooler relief valve spring
Compressed at
18 to 22 lbs. (80 to 97.7 N) force 1.38 in. (35.1 mm)
Oil pressure regulating valve spring
Compressed at
30 to 36 lbs.
(133 to 160 N) force . . . . . 1.91 in. (48.5 mm)

If the housing and cooler are removed, clean by soaking in diesel fuel or solvent. Use a brush and compressed air to clean passages.

Under normal conditions, the oil cooler need not be removed to clean just the water passages. Remove cooler end caps and inspect and clean tubes when cooling system is cleaned.

Reinstall valves in housing and housing and cooler on engine.

Perform engine oil pressure test and adjust oil pressure regulating valve as necessary. Add or subtract washers between spring and valve to increase or decrease pressure.

OIL PUMP REPAIR

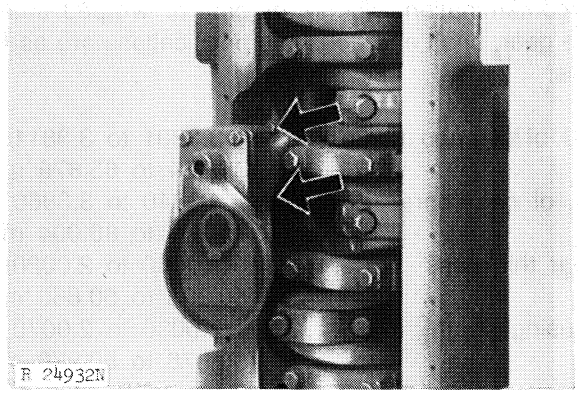

Fig. 5-Engine Oil Pump

OIL PUMP REPAIR—Continued

Drain crankcase and remove oil pan.

Remove pump mounting cap screws (Fig. 5) and carefully pry up on pump to loosen sealing surface. Remove pump.

Remove intake screen and pump housing cover.

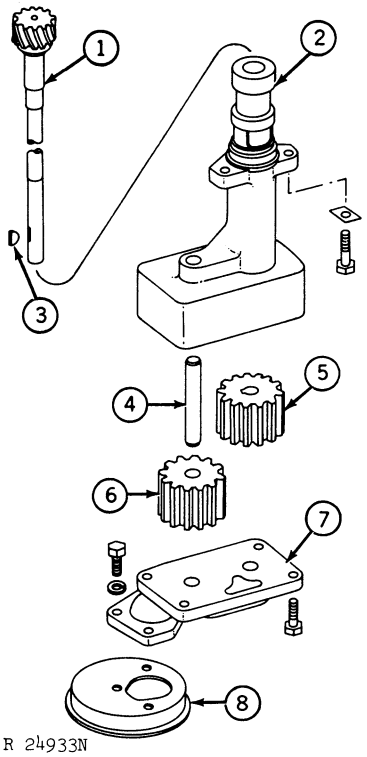

1—Drive Gear and Shaft
2—Pump Housing
3—Woodruff Key
4—Idler Shaft
5—Driven Gear
6—Idler Gear
7—Oil Pump Cover
8—Oil Pump Screen

Fig. 6-Exploded View of Engine Oil Pump

Examine gears and housing for wear or damage. Note sealing edge of pump housing for signs of damage that could cause leakage. Worn gears, shafts or housing can reduce pump output and could indicate oil contamination, sludge, or bent or warped shafts. The gear, shaft and housing specifications are as follows:

O.D. of idler and driven gears . . . 3.3801 to 3.3811 in. (85.854 to 85.879 mm)
I.D. of gear bore in housing . . 3.3840 to 3.3860 in. (85.953 to 86.004 mm)
Gear thickness . . . . . 2.0000 to 2.0020 in. (50.800 to 50.850 mm)
Housing depth . . . . . 2.0030 to 2.0070 in. (50.876 to 50.976 mm)
O.D. of drive shaft . . . . . 0.7485 to 0.7495 in. (19.011 to 19.037 mm)
I.D. of driven gear . . . . . 0.7470 to 0.7480 in. (18.973 to 18.999 mm)
O.D. of idler shaft . . . . . 0.7534 to 0.7540 19.136 to 19.151 mm)
I.D. of idler gear . . . . . 0.7550 to 0.7560 in. (19.177 to 19.202 mm)

If either the idler gear or the driven gear must be replaced, both gears must be replaced as a set.

The idler gear is removed by sliding from the idler gear shaft.

If the drive gear on the top of the shaft is excessively worn or damaged, check the integral oil pump drive gear on the camshaft for wear or damage. Replace pump drive gear and camshaft as necessary.

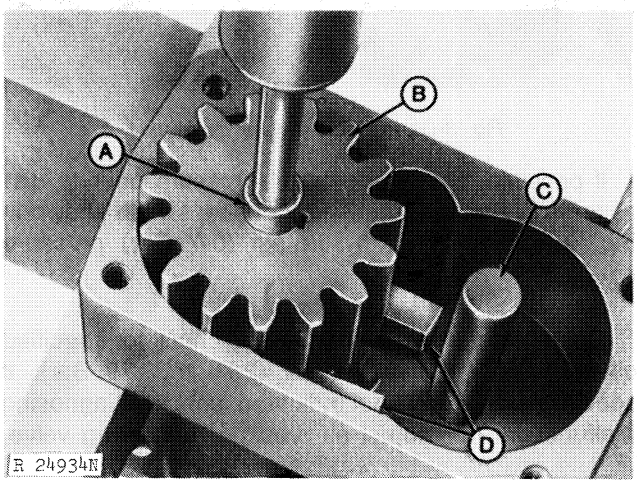

A—Pump Drive Shaft
B—Driven Gear
C—Idler Gear Shaft
D—1/4" (6.35 mm) or 1/2" (1.27 cm) Shims

Fig. 7-Driven Gear Removal

Remove the driven gear from the shaft if either the driven gear or drive gear and shaft must be replaced.

Be very careful when removing the driven gear so the Woodruff Key does not damage the oil pump housing. Refer to Fig. 7 and follow the instructions below:

1. Support the base of the pump housing in the press.

2. Press the shaft 1/4 inch (6.35 mm) from the driven gear and place two 1/4 inch (6.35 mm) shims between the gear and housing.

3. Press the shaft another 1/4 inch (6.35 mm) from the driven gear and place two 1/2 inch (12.7 mm) shims between gear and housing.

4. Pressing the shaft another 1/2 inch (12.7 mm) should remove the gear.

ASSEMBLY

If idler shaft must be replaced, press new shaft into pump housing so that pressed-in end of shaft is flush to 0.02 in. (0.508 mm) below outside surface of housing.

Slide new assembled drive gear and shaft in pump housing and install Woodruff Key in keyway.

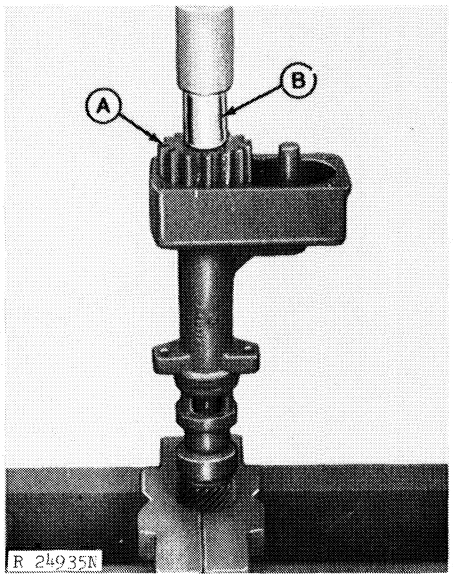

A—Driven Gear **B—Press Adapter**

Fig. 8-Installing Driven Gear on Shaft

Support pump housing and drive gear on press (Fig. 8). Use a press adapter that has a bore with an I.D. larger than the pump shaft O.D. Adapter bore must be deeper than 1.02 inches (25.9 mm). With key and keyway in driven gear aligned, press gear flush with sealing surface of housing. Pump shaft will extend approximately 1.02 inches (25.9 mm) above housing.

Install idler gear on idler gear shaft and spin drive gear. Both the idler gear and the driven gear must be free to turn before and after cover is installed.

Install cover and intake screen assembly.

Install pump in cylinder block. Tighten cap screws with hardened washers to 35 ft-lbs. (47 Nm).

Align oil pan with rear face of cylinder block. Tighten 1/2 inch cap screws to 85 ft-lbs (115 Nm) and 3/8 inch cap screws to 35 ft-lbs (47 Nm).

Fill crankcase with specified oil. (See Section 10.)

Litho in U.S.A.

Group 30
COOLING SYSTEM

GENERAL INFORMATION

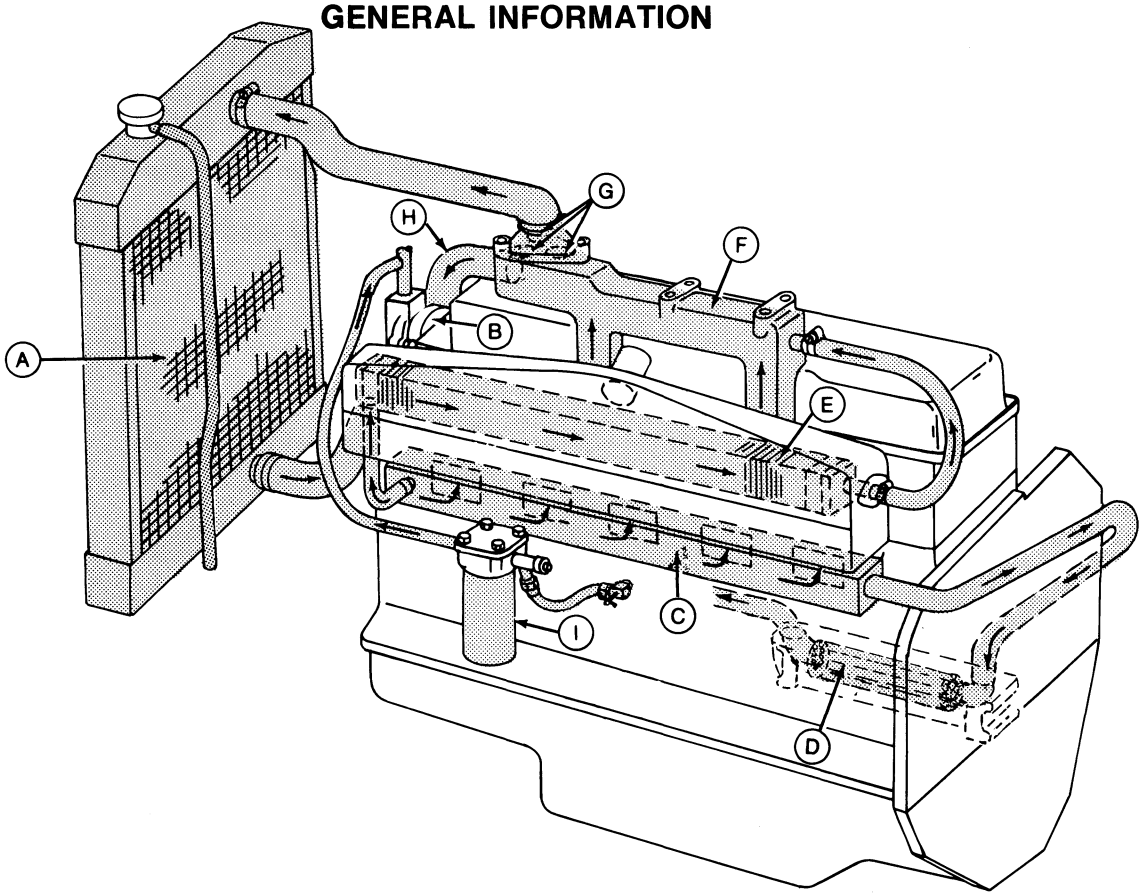

R32335C

A—Radiator
B—Water Pump
C—Main Coolant Gallery
D—Engine Oil Cooler
E—Intercooler
F—Water Manifold
G—Thermostats
H—Coolant Bypass Pipe
I —Coolant Conditioner Filter

Fig. 1-Engine Cooling System

The cooling system consists of a conventional type radiator (A, Fig. 1), water pump (B), water manifold (F), and three thermostats (G). In addition, the system supplies coolant to the engine oil cooler (D) and intercooler (E) to cool engine oil and intake air.

The pump draws coolant from the bottom of the radiator and discharges it into the main coolant gallery (C) on the left-hand side of the engine. Coolant from the gallery circulates through the block to cool block and cylinder liners, then flows into the cylinder head. From the cylinder head, the coolant passes into the water manifold (F) and thermostat housing.

If the thermostats (G) are closed (as during warm-up periods) coolant is directed back to the pump through bypass (H) to be recirculated. This provides a faster and more uniform warm-up.

If the thermostats are open (engine at normal operating temperature) coolant flows back through the thermostats to the top of the radiator.

Coolant is also taken from the main gallery into the intercooler (E) to cool intake air. It circulates through the intercooler and out to the water manifold.

The engine oil cooler (D), mounted beneath the oil pressure regulating valve housing, receives coolant from the water pump and returns it to the cylinder block.

Additionally, coolant is drawn off the main gallery to the coolant conditioner filter (I). Here an anti-corrosive chemical is added to the coolant while any debris that may be present in the cooling system is removed. The coolant returns to the system at the inlet side of the water pump.

Litho in U.S.A.

DIAGNOSING MALFUNCTIONS

Engine Overheats

Low coolant level
Incorrect timing
Low oil level
Dirty radiator or grille screen
Loose fan belt
Faulty thermostats
Faulty radiator pressure cap
Faulty water pump
Corroded coolant passages
Improper operation
Defective head gasket

Low Coolant Level

Improper maintainance
Improper operation
Damaged radiator
Water pump seal leakage
Leakage
Leaking oil cooler
Leaking intercooler
Faulty radiator cap

RADIATOR AND FAN

Visually check the radiator for leaks or damage.

If no leaks can be seen but leaking persists, remove radiator from the tractor and perform the following test:

1. Install radiator cap, plug the overflow tube and the outlet pipe.
2. Attach an air hose to the inlet connection.
3. Apply a maximum of 12 psi (82.74 kPa) air pressure and submerge in tank of water.

NOTE: Repairs should not be attempted except by an experienced radiator personnel.

Check radiator cap for defects. Cap should maintain 6.25 to 7.50 psi (43.09 to 51.71 kPa).

Check fan pulley and belt for wear, damage or misalignment. Check fan blades for damage or bent conditions. Replace as necessary.

Use a belt tension gauge to check belts. Adjust to the following specifications:

ALTERNATOR BELT TENSION

New Belt ..... 95-104 lbs (423-467 N)
After Run In* ..... 85-94 lbs (378-423 N)

*Immediately after run in (approximately 10 min.) check tension. If tension is within specification, no adjustment is necessary. If tension is not within specification, wait ten minutes; loosen belts and tension to specifications. Tension front belt only.

WATER PUMP

Removal

Disconnect electrical wiring and remove alternator.

Remove fan from pulley.

Drain cooling system and remove inlet and outlet pipes and hoses from water pump.

Remove water pump from engine.

Disassembly and Inspection

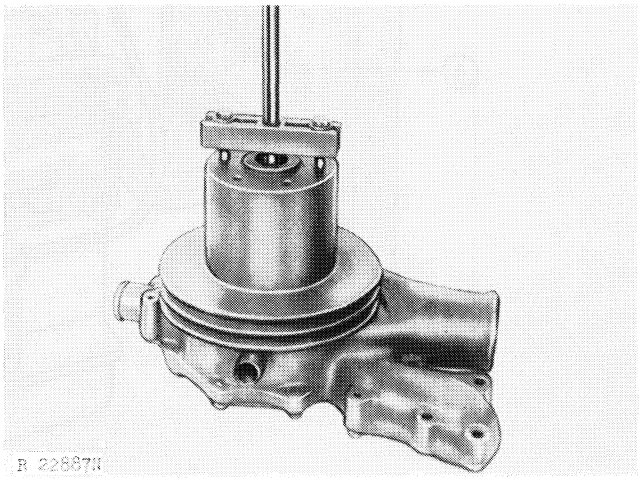

Fig. 2-Removing Pulley

Remove fan pulley as shown in Fig. 2.

Remove pump cover. Examine pump for cracks and leakage. Check for wear on impeller and inside of housing.

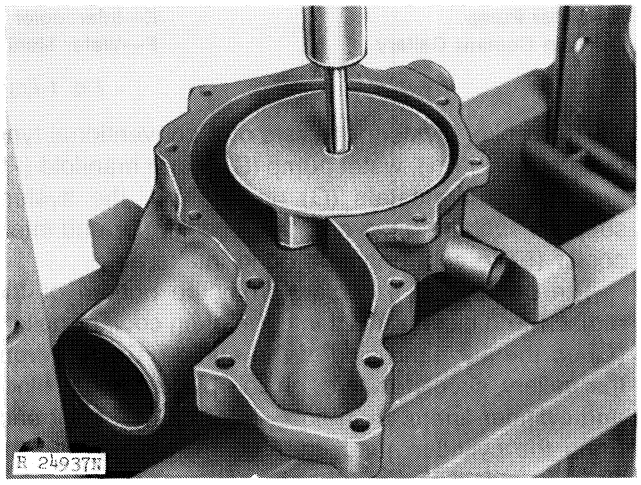

Fig. 3-Removing Shaft and Bearing

If necessary, remove shaft and bearing by pressing through impeller (Fig. 3). Do NOT attempt to press shaft on the other end. A flange in the bearing bore prevents bearing passage through housing.

Inspect pump parts for wear or damage. Replace as necessary.

Pump leakage can be caused by a cracked housing, damaged seal, impeller bore, cup and insert, or bearing.

Check seal under magnification for nicks, scratches, cracks, or foreign material. Leakage at the drain hole in the housing usually indicates a leaking seal. Replace seal, cup and insert as necessary.

Assembly

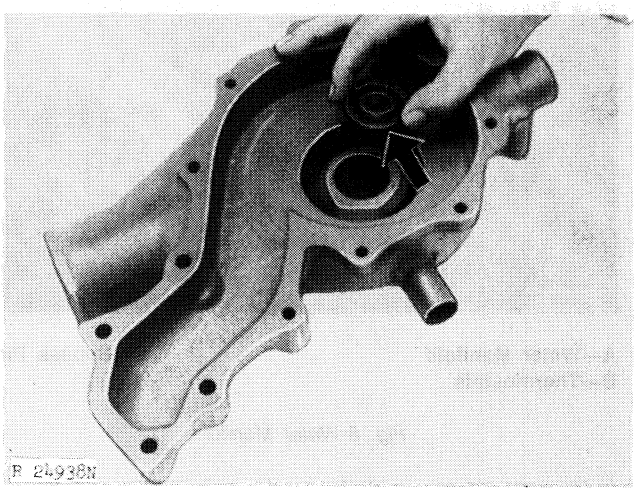

Fig. 4-Installing Seal

Be sure that seal is clean and dry. Install into seal bore as shown in Fig. 3.

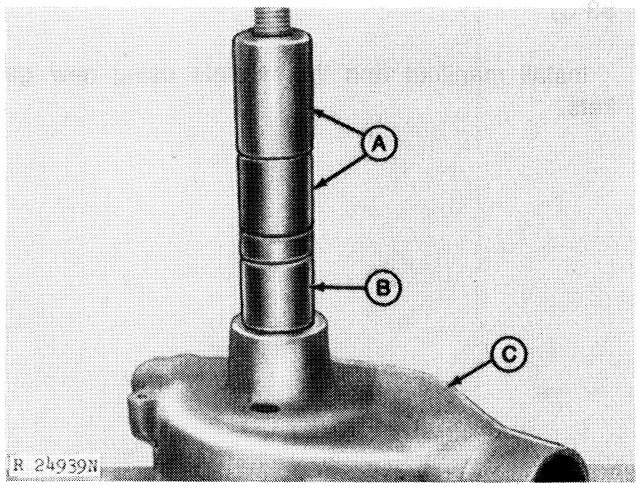

A—Driver **B—Bearing Shaft** **C—Housing**

Fig. 5-Installing Bearing Shaft

Coat bearing with light coat of clean SAE 10W engine oil. Use JDE-74 driver and press bearing with shaft into housing until bearing is flush to 0.02 inch (0.05 mm) above edge of housing.

Install the rubber cup and ceramic insert into the impeller. The insert is placed in the cup with polished side out (the back side of the insert will have a groove or three dots for identification). Place both cup and insert at an angle in the impeller and snap into position by hand.

IMPORTANT: The seal lip and insert face must be perfectly clean as both surfaces are lapped to a fine finish.

Apply a light coat of Permatex to bearing shaft bore in the impeller. Application should be from the side opposite the insert to prevent getting permatex on insert.

Apply a light coat of SAE 10W engine oil to insert face (do not use grease).

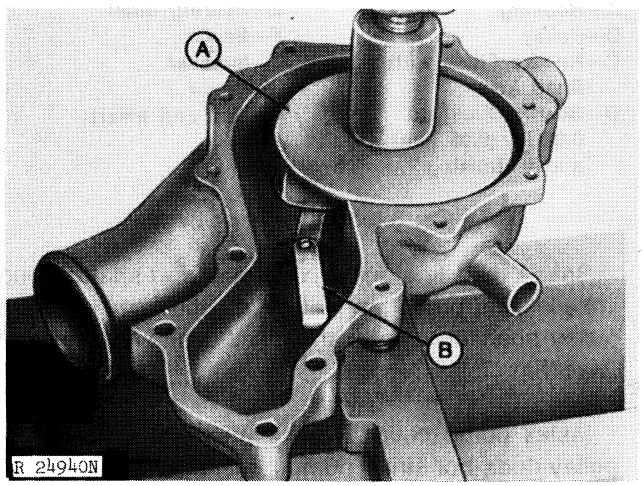

A—Impeller **B—0.025 in. (0.635 mm) Feeler Gauge**

Fig. 6-Installing Impeller

Support pump shaft and press impeller into place. Be sure that impeller is started straight. Press until impeller is a minimum of 0.015 to 0.035 inch (0.38 to 0.89 mm) from housing seat. Turn shaft and impeller to be sure that impeller does not drag on housing.

Litho in U.S.A.

ASSEMBLY—Continued

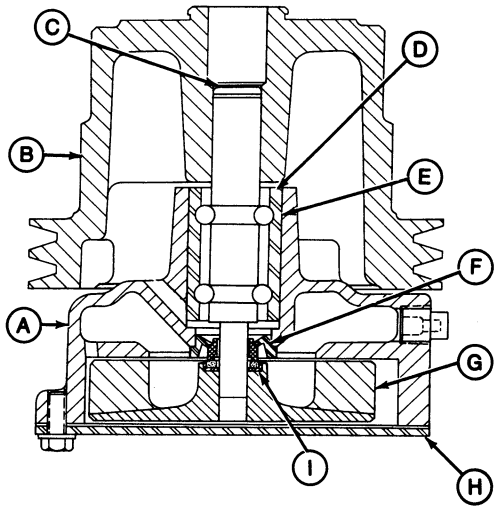

R 24941N

A—Housing
B—Pulley
C—Recess Flush with Shaft End
D—Bearing Flush to 0.02 in. (0.05 mm) above Housing
E—Bearing Shaft
F—Seal
G—Impeller
H—Cover
I—Cup and Insert

Fig. 7-Assembled Water Pump

Before installing pump cover, support shaft through impeller and press fan pulley until the shoulder in the pulley shaft bore is flush with the end of the shaft. (See Fig. 7.)

Install pump cover. Rotate pulley to be sure that pulley does not strike pump housing or impeller does not strike pump cover.

Install water pump on engine using new gaskets.

Install fan and pipes to water pump. Tighten fan to pulley cap screws to 35 ft-lbs (47 Nm).

Install alternator.

Fill radiator with clean soft water and John Deere Summer Engine Coolant Conditioner or antifreeze solution.

WATER MANIFOLD AND THERMOSTATS

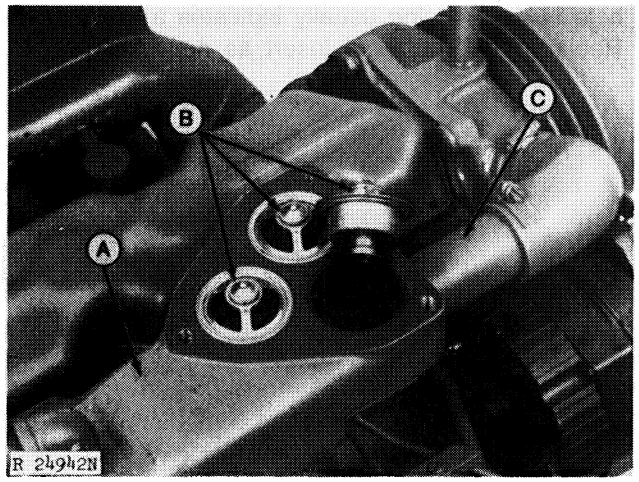

A—Water Manifold
B—Thermostats
C—Bypass Pipe

Fig. 8-Water Manifold

Inspect water manifold, thermostat housing and water hoses for cracks or damage.

Remove thermostat housing cover and check thermostats. Test thermostats for opening temperatures. Thermostats should open at 177° to 182°F (80 to 83°C).

Install manifold and thermostats using new gaskets.

COOLANT CONDITIONER FILTER

Inspection and Repair

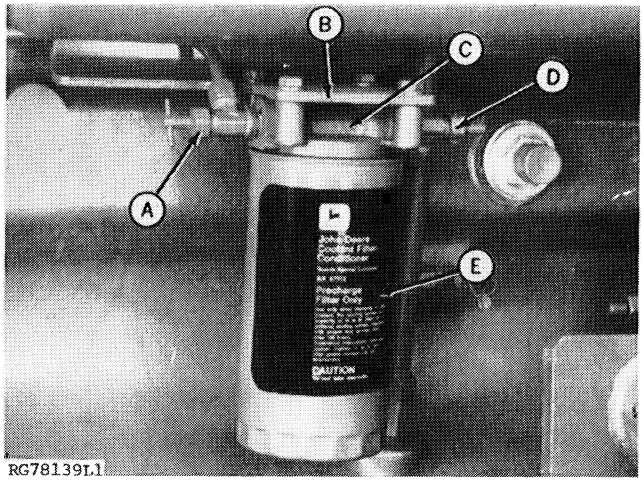

A—Inlet Valve
B—Mounting Bracket
C—Mounting Base
D—Outlet Valve
E—Filter Element

Fig. 9-Coolant Conditioner Filter

1. Visually inspect all connections for evidence of leaks.

2. Drain coolant from engine block.

3. Disconnect fittings at mounting base.

4. Remove four cap screws and remove base from mounting bracket.

5. Inspect base for cracks or damage and replace as necessary.

Installation

1. Apply joint sealing compound to all fittings before installation. Tighten fittings securely.

2. Attach mounting base to mounting bracket, tightening cap screws to 35 ft-lbs (48 Nm) (4.8 kgm). Be sure outlet side of base is facing water pump.

3. Connect fittings to mounting base and tighten securely.

4. Apply a thin film of clean engine oil to filter gasket and install filter. Tighten until gasket contacts mounting base, then tighten an additional 1/2 to 3/4 turn.

Litho in U.S.A.

Group 35
SPECIFICATIONS AND SPECIAL TOOLS

SPECIFICATIONS

Item	New Part Specification	Wear Tolerance
Cylinder Head, Valves, And Camshaft		
Valve clearance		
Intake valve	0.013 to 0.017 in. (0.33 to 0.43 mm)	----
Exhaust valve	0.023 to 0.027 in. (0.58 to 0.68 mm)	----
Valve lift at specified clearance		
Intake valve	0.505 to 0.535 in. (12.83 to 13.59 mm)	----
Exhaust valve	0.441 to 0.471 in. (11.20 to 11.96 mm)	----
Valve springs - compressed		
Inner spring - valve closed	1.77 in. at 42.2 to 46.2 lbs. (45.0 mm at 187.7 to 205.5 N) force	----
- valve open	1.24 in. at 84.7 to 98.3 lbs. (31.5 mm at 376.8 to 437.3 N) force	----
Outer spring - valve closed	2.01 in. at 70.1 to 78.2 lbs. (51.1 mm at 311.8 to 347.4 N) force	----
- valve open	1.48 in. at 162 to 188 lbs. (37.6 mm at 721 to 836 N) force	----
Valve stem O.D.	0.4338 to 0.4345 in. (11.01 to 11.04 mm)	----
Valve guide I.D.	*0.4365 to 0.4375 in. (11.09 to 11.11 mm)	----
	**0.4350 to .4360 in. (11.05 to 11.07 mm)	
Valve stem - to - guide clearance	*0.0020 to 0.0037 in. (0.051 to 0.094 mm)	0.0060 to 0.0080 in. (0.152 to 0.203 mm)
	**0.0005 to 0.0022 in. (0.013 to 0.016 mm)	0.0044 to 0.0064 in. (0.102 to 0.152 mm)
Valve guide installed	1.875 in. (47.62 mm) from bottom of cylinder head	----
Valve face angle		
Intake valve	19.5°	----
Exhaust valve	44.5°*	----
	29.5°**	
Valve face O.D.		
Intake valve	2.026 to 2.036 in. (51.46 to 51.71 mm)	----
Exhaust valve	1.870 to 1.880 in. (47.50 to 47.75 mm)	----
	***1.895 to 1.905 in. (48.13 to 48.38 mm)	
Valve seat width	0.109 to 0.126 in. (2.77 to 3.20 mm)	----
Valve seat angle		
Intake valve	20°	----
Exhaust valve	45°*	----
	30°**	
Valve seat concentricity with guide	0.0040 in. (0.914 to 1.270 mm)	----
Valve relation to head surface		
Intake valve	*0.005 to 0.019 in. (0.12 to 0.48 mm) below	0.0300 in. (0.762 mm)
	**0.003 above to 0.011 in. below (0.08 above to 0.028 mm	0.0300 in. (0.762 mm)
Exhaust valve	below)	0.0300 in. (0.762 mm)
	*0.028 to 0.043 in. (0.73 to 1.09 mm) below	0.0300 in. (0.762 mm)
	**0.015 to 0.030 in. (0.40 to 0.76 mm) below	
Material removed to resurface cylinder head	0.0300 in. (0.762 mm) MAXIMUM (See page 20-10-5)	----
Camshaft end play	0.0025 to 0.0085 in. (0.064 to 0.216 mm)	0.0150 in. (0.381 mm)
Thrust plate thickness	0.1185 to 0.1215 in. (3.010 to 3.086 mm)	0.1135 in. (2.883 mm)
Camshaft bushing journal O.D.	2.3745 to 2.3755 in. (60.312 to 60.338 mm)	----
Camshaft bushing I.D.	2.3775 to 2.3795 in. (60.389 to 60.439 mm)	----
Camshaft bushing-to-journal clearance	0.0020 to 0.0050 in. (0.042 to 0.127 mm)	0.006 in. (0.152 mm)
Cylinder head cap screws	140 to 160 ft-lbs (190 to 217 Nm) initial torque	----
	175 to 185 ft-lbs (237 to 251 Nm) second torque	----
	205 to 215 ft-lbs (278 to 292 Nm)	----

*(Ser. No. -E10696)
**(Ser. No. E10697-)
***(Ser. No. 021562-)

Item	New Part Specification	Wear Tolerance

Cylinder Head, Valves, and Camshaft (Continued)

Rocker arm shaft clamps	65 ft-lbs (88 Nm) torque	----
Intake manifold	50 to 60 ft-lbs (68 to 81 Nm) torque	----
Intercooler cover	30 to 40 ft-lbs (41 to 54 Nm) torque	----
Injection nozzles	60 to 70 ft-lbs (81 to 95 Nm) torque	----
Camshaft thrust plate	20 ft-lbs (27 Nm) torque	----
Camshaft gear	85 ft-lbs (115 Nm) torque	----
Timing gear cover	30 ft-lbs (41 Nm) torque	----
Damper pulley to crankshaft	170 ft-lbs (230 Nm) torque	----
Oil pan to cylinder block		
- 1/2 in. cap screws	85 ft-lbs (115 Nm) torque	----
- 3/8 in. cap screws	35 ft-lbs (47 Nm) torque	----

Cylinder Block, Liners, Pistons, and Rods

Cylinder liner height above block	0.0000 to 0.0040 in. (0.000 to 0.102 mm) inspected height 0.000 to 0.004 in. (0.00 to 0.102 mm) in used block 0.001 to 0.004 in. (0.025 to 0.102 mm) in new block	----
Piston oil control ring clearance	0.0024 to 0.0040 in. (0.061 to 0.102 mm)	0.0065 in. (0.165 mm)
Piston O.D.		
Fit Point 1.95 in. (49.53 mm) from bottom		
"Low"	5.1197 to 5.1202 in. (130.04 to 130.05 mm)	----
"Medium"	5.1202 to 5.1207 in. (130.05 to 130.07 mm)	----
"High"	5.1207 to 5.1212 in. (130.07 to 130.08 mm)	----
Piston to liner clearance		
Fit point		
"Low"	0.0038 to 0.0049 in. (0.096 to 0.124 mm)	Replace piston and liner as a unit when fitpoint-to-liner clearance is greater than 0.006 in. (0.152 mm).
"Medium"	0.0039 to 0.0050 in. (0.099 to 0.127 mm)	
"High"	0.0040 to 0.0051 in. (0.102 to 0.130 mm)	
Cylinder liner maximum wear or taper	0.0015 in. (0.0381 mm)	----
Cylinder liner I.D.		
"Low"	5.1240 to 5.1246 in. (130.15 to 130.16 mm)	----
"Medium"	5.1246 to 5.1252 in. (130.16 to 130.18 mm)	----
"High"	5.1252 to 5.1258 in. (130.18 to 130.20 mm)	----
Piston pin O.D.	1.9989 to 1.9995 in. (50.772 to 50.787 mm)	----
Piston pin bore in piston I.D.	1.9998 to 2.0000 in. (50.795 to 50.800 mm)	----
Connecting rod pin bushing I.D.	2.0002 to 2.0012 in. (50.805 to 50.830 mm)	----
Pin to bushing clearance	0.0007 to 0.0023 in. (0.0178 to 0.0584 mm)	----
Connecting rod bearing assembled I.D.	3.5004 to 3.5024 in. (88.910 to 88.961 mm)	----
Connecting rod bearing to journal O.D.	3.4980 to 3.4990 in. (88.850 to 88.875 mm)	----
Connecting rod bearing to journal clearance	55 ft-lb (75 Nm) (7.5 kgm), then an additional 1/4 turn (90	----
Connecting rod caps	degrees) (See p. 25-15-8).	----
Piston cooling orifices	85 to 115 in-lbs (9.60 to 12.43 Nm) torque	----

Item	New Part Specification	Wear Tolerance

Crankshaft, Main Bearings, and Flywheel

Crankshaft end play	0.0040 to 0.0100 in. (0.102 to 0.254 mm)	----
Clutch shaft pilot bushing I.D.	1.0035 to 1.0045 in. (25.490 to 25.514 mm)	----
Clutch shaft thrust washer thickness	0.1850 to 0.1890 in. (4.70 to 4.80 mm)	----
Main bearing journal O.D.	3.7480 to 3.7490 in. (95.199 to 95.225 mm)	----
Main bearing assembled I.D.	3.7508 to 3.7528 in. (95.270 to 95.321 mm)	----
Main bearing to journal clearance	0.0018 to 0.0048 in. (0.046 to 0.122 mm)	----
Journal taper per inch of journal length	0.0001 in. (0.0025 mm)	----
Journal out of roundness	0.0040 in. (0.102 mm)	----
Under sized bearings available	0.002, 0.010, 0.020, and 0.030 in. (0.05, 0.25, 0.51, and 0.76 mm)	----
Damper pulley to crankshaft	170 ft-lbs (230 Nm) torque	----
Damper to damper pulley	35 ft-lbs (47 Nm) torque	----
Main bearing caps	205 to 215 ft-lbs (278 to 292 Nm) torque	----
Rear crankshaft oil seal housing	20 ft-lbs (27 Nm) torque	----
Flywheel to crankshaft	130 ft-lbs (176 Nm) torque	---
Oil pan to block - 1/2 in. cap screws	85 ft-lbs (115 Nm) torque	----
- 3/8 in. cap screws	35 ft-lbs (47 Nm) torque	----

Lubrication System

Oil filter relief valve operating pressure	30 psi (2.07 bar) pressure differential	----
Engine oil pressure	40 to 55 psi (2.76 to 3.79 bar)	----
Filter relief valve spring compressed to	1.38 in. at 18 to 22 lbs. (35.1 mm at 80 to 97.7 N)	----
Cooler relief valve spring compressed to	1.38 in. at 18 to 22 lbs. (35.1 mm at 80 to 97.7 N)	----
Oil pressure regulating valve spring compressed to	1.91 in. at 30 to 36 lbs. (48.5 mm at 133 to 160 N)	----
Idler and driven gears O.D.	3.3801 to 3.3811 in. (85.854 to 85.879 mm)	----
Housing gear I.D.	3.3840 to 3.3860 in. (85.953 to 86.004 mm)	-----
Gear thickness	2.0000 to 2.0020 in. (50.800 to 50.850 mm)	-----
Housing depth	2.0030 to 2.0070 in. (50.876 to 50.976 mm)	----
Idler shaft O.D.	0.7534 to 0.7540 in. (19.136 to 19.152 mm)	----
Idler gear I.D.	0.7550 to 0.7560 in. (19.177 to 19.209 mm)	----
Drive shaft O.D.	0.7485 to 0.7495 in. (19.011 to 19.037 mm)	----
Driven gear I.D.	0.7470 to 0.7480 in. (18.973 to 18.999 mm)	----
Oil pump to cylinder block	35 ft-lbs (47 Nm) torque	----

Cooling System

Radiator leakage test	12 psi (82.74 kPa) MAXIMUM air pressure	----
Radiator cap pressure	6.25 to 7.50 psi (43.1 to 51.7 kPa)	----
Fan belt tension	New Belt	
Single belt	130-140 lbs. (572-622 N)	
Dual belt	95-104 lbs. (423-467 N)	
	After Run In	
All belts	85-94 lbs. (378-423 N)	
Water pump bearing installed	Flush to 0.02 in. (0.05 mm) above housing	----
Impeller installed	0.015 to 0.035 in. (0.38 to 0.89 mm) from housing seat	----
Thermostats opening temperature	177 to 182°F (80 to 83°C)	----

INSTRUCTIONS FOR ENGINE BREAK-IN

Use a dynamometer to perform the following break-in procedure. If necessary, engine break-in can be performed without a dynamometer if under controlled operating conditions.

Fill engine crankcase with Torq-Gard Supreme 10W-20 oil to proper level for use during the break-in operation.

Time	Load	Engine Speed	Remarks
5 Minutes	No Load	800 RPM	Check oil pressure, coolant temperature and leakage.
5 Minutes	No Load	1500 to 2000 RPM	
5 Minutes	1/4 Load	1900 to 2100 RPM	
10 Minutes	1/2 Load	1900 to 2100 RPM	
10 Minutes	1/2 to 3/4 Load	1900 to 2100 RPM	
10 Minutes	3/4 to Full Load	2100 RPM	

After break-in, run engine 1 to 2 minutes at 1500 rpm, No Load before shut-down. Loosen, then retighten cylinder head cap screws per specified sequence to 205 to 215 ft-lbs (278 to 292 Nm). Loosen, then retighten rocker arm shaft clamps to 65 ft-lbs (88 Nm). Check and reset valve clearance to specifications.

During the first 100 hours of operation, avoid over-loads, excessive idling, and no-load operations. After 100 hours, drain crankcase oil and change oil filter. Fill crankcase with oil of proper viscosity and service classifications.

Litho in U.S.A.

SPECIAL TOOLS

No.	Name	Use
JDE-81*	Engine Rotation Tool	Rotate engine
JDE-81-4*	Timing Pin	Used to set engine "TDC"
D-20002WI*	Valve Guide Knurling Tool Set	Knurl valve guides
JDE-75*	Driver	Install valve guides
JDE-77*	Puller	Remove valve seat inserts
JDE-72*	Driver	Install intake valve seat inserts
JDE-73*	Driver	Install exhaust valve seat inserts
D-01003AA* (JDST-32)	Engine Repair Stand	Hold engine for repairs
D-05001ST* (JDG-13)	Adapter Plate	Attach engine to engine stand
JDE-6 and 6-10*	Bushing Replacement Set	Replace camshaft bushings
D-15001NU* (ND-425)	Magnetic Holding Tool Set	Hold cam followers away from camshaft
JDE-55*	Ring Groove Wear Gauge	Check piston ring grooves
D-01062AA* (974)	Sleeve Puller	Remove cylinder liners
D-17006BR	Flex-Hone	Deglaze cylinder liners
JDE-98*	Bushing Tool	Remove and install piston pin bushings
D-17015BR	Brush	Clean cylinder liner counterbore
AR54749**	Lubricating Soap	Lubricate liner O-rings and packings
JDE-94*	Ring Expander	Install piston rings
JDE-97*	Ring Compressor	Install pistons in cylinder liners
JDH-7*	Driver	Install crankshaft gear
JDE-34-1	Guide	Install rear crankshaft wear sleeve
JDE-68*	Driver	Install rear crankshaft wear sleeve
JDE-3*	Driver	Install front crankshaft wear sleeve
D-01045AA* (27797)	Bushing Driver Seat	Install oil seals and bushings
JDE-74*	Driver	Install water pump bearing shaft

**Order from Service Tools, Inc., Box 314, Owatonna, Minnesota 55060*
***John Deere Parts*

Litho in U.S.A.

Litho in U.S.A.

Section 30
FUEL SYSTEM

CONTENTS OF THIS SECTION

GROUP 5 - DIAGNOSING MALFUNCTIONS 5-1

GROUP 10 - AIR INTAKE SYSTEM
- Pre-Cleaner 10-1
- Aspirator 10-2
- Air Cleaner 10-3
- Restriction Indicator Switch 10-3
- AiResearch Turbochargers 10-4
- Schwitzer Turbochargers 10-18
- Intercoolers 10-30
- Ether Starting Aid 10-33

GROUP 15 - DIESEL FUEL SYSTEM
- General Information 15-1
- Fuel Tanks 15-2
- Fuel Tank Venting 15-3
- Fuel Gauge Sender 15-3
- Fuel Supply Pump 15-3
- Fuel Check Valve 15-5
- Fuel Filters 15-5

GROUP 15 - DIESEL FUEL SYSTEM (Cont'd)
- Bleeding Fuel System 15-6
- Fuel Injection Pump 15-6
- Aneroid 15-10
- Hydraulic Aneroid Activator 15-13
- Overflow Valve 15-15
- Fuel Injection Nozzles 15-16

GROUP 20 - CONTROL LINKAGE
- Speed Control Linkage 20-1
- Foot Throttle Linkage 20-3
- Starting Fuel Control Linkage 20-4
- Diesel Fuel Shut-Off Control 20-7

GROUP 25 - SPECIFICATIONS AND SPECIAL TOOLS
- Specifications 25-1
- Special Tools 25-4

Group 5
DIAGNOSING MALFUNCTIONS

The following is a guide for diagnosing fuel system malfunctions. For specific diagnosis of fuel system components, refer to the groups which cover complete servicing.

Fuel Not Reaching Injection Nozzles

Filters clogged.
Fuel line clogged or restricted.
Fuel too heavy at low temperatures.
Air in system.
Low supply pump pressure.

Engine Starts Hard or Won't Start

Air leak on suction side of system.
Fuel too heavy at low temperatures.
Injection nozzles faulty or sticking.
Incorrect timing
Governor is faulty or not operating.
Water in fuel.
Filters clogged.
Injection pump return fuel line or fittings restricted.
Low cetane fuel.
Starting fuel control linkage or aneroid activator not working properly.

Engine Starts and Stops

Air in system.
Filters clogged.
Fuel lines clogged or restricted.
Water in fuel.
Injection pump return fuel line or fittings restricted.

Erratic Engine Operation

Filters clogged.
Air leak on suction side of system.
Fuel too heavy at low temperatures.
Injection nozzles faulty or sticking.
Fuel lines clogged or restricted.
Incorrect timing.
Governor faulty or not operating.
Water in fuel.
Injection pump return fuel line or fittings restricted.
Low cetane fuel.
Injection nozzle return lines clogged.

Litho in U.S.A.

Engine Idles Poorly

Air leak on suction side of system.
Injection nozzles faulty or sticking.
Incorrect timing.
Governor faulty or not operating.
Fuel lines clogged or restricted.
Water in fuel.
Injection pump return lines or fittings restricted.
Injection nozzle return lines clogged.
Low cetane fuel.

Engine Does Not Develop Full Power

Air cleaner is restricted.
Low cetane fuel.
Incorrect timing.
Governor faulty or not operating.
Filter clogged.
Air leak on suction side of system.
Injection nozzle return lines clogged.
Injection nozzles faulty or sticking.
Injection pump return fuel line or fittings are restricted.
Water in fuel.
Turbocharger defective.
Incorrect fast idle speed.
Intake manifold-to-aneroid pressure pipe loose or disconnected.
Fuel shut-off cable improperly adjusted.
Overflow valve at injection pump fuel return outlet not working properly.

Engine Emits Black Smoke

Injection nozzles faulty or sticking.
Injection pump timing is incorrect.
Low cetane fuel.
Air cleaner element is restricted.
Over-fueling.
Turbocharger defective.
Air leak in manifold.
Aneroid defective or improperly adjusted.

Engine Emits Blue or White Smoke

Cranking speed too low.
Injection pump timing is incorrect.
Injection nozzles faulty or sticking.
Excessive wear in liners and/or piston rings stuck.
Incorrect cetane fuel for ambient temperature.
Engine running too cold.

Litho in U.S.A.

Group 10
AIR INTAKE SYSTEM

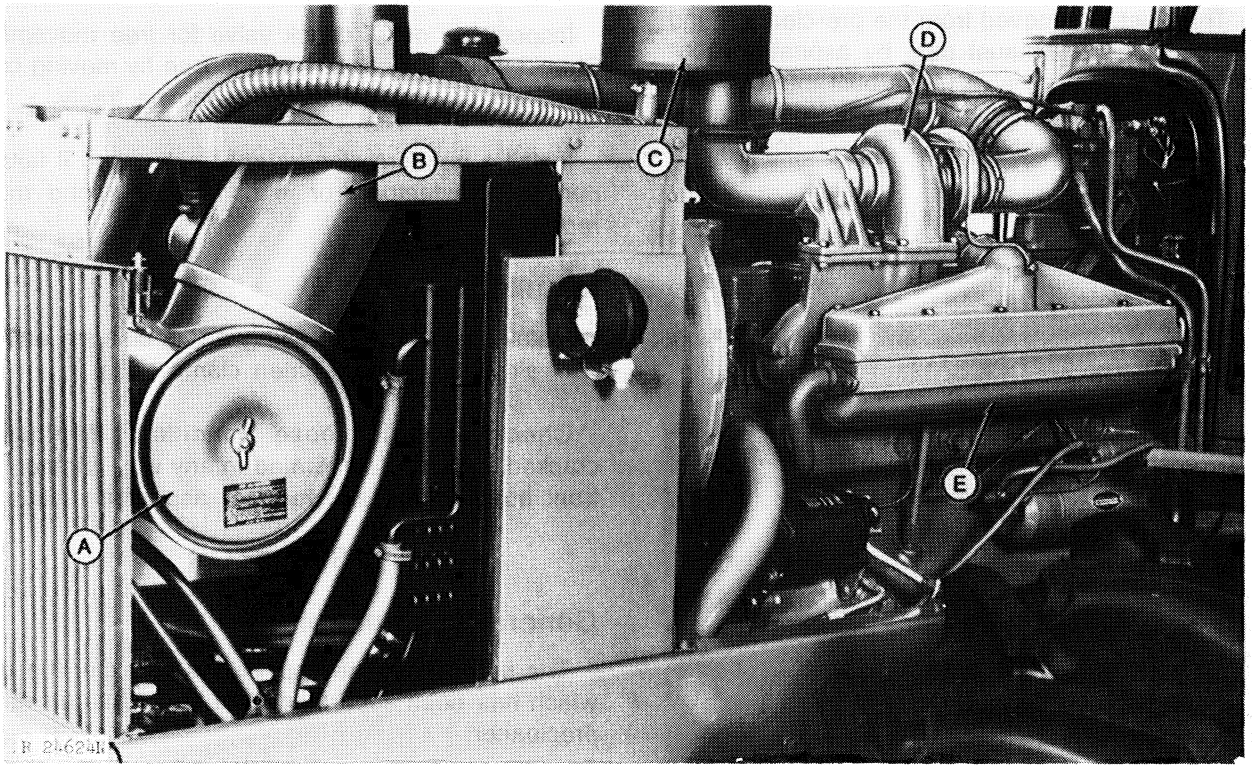

A—Air Cleaner
B—Pre-Cleaner
C—Aspirator
D—Turbocharger
E—Intercooler

Fig. 1-Air Intake System (8630 Illustrated)

GENERAL INFORMATION

The air is drawn through the air intake pipe into the pre-cleaner (B, Fig. 1). Pre-cleaning is accomplished by specially designed tubes (Fig. 2) which separate the dust from the air by centrifugal action. The dust, along with a small amount of air is evacuated from the pre-cleaner by a suction hose to an aspirator in the muffler. The air and dust is then exhausted up and out the muffler extension. After pre-cleaning, the rest of the air then goes through a dry-type primary filter element and a safety element in the air cleaner before passing on to the turbocharger.

IMPORTANT: Each time hood is removed, check air intake pipe and nose connections for tightness. Keep them tight.

PRE-CLEANER

General Information

A series of tubes, each having a deflector (B, Fig. 2) on the upper end, are pressed into the body of the

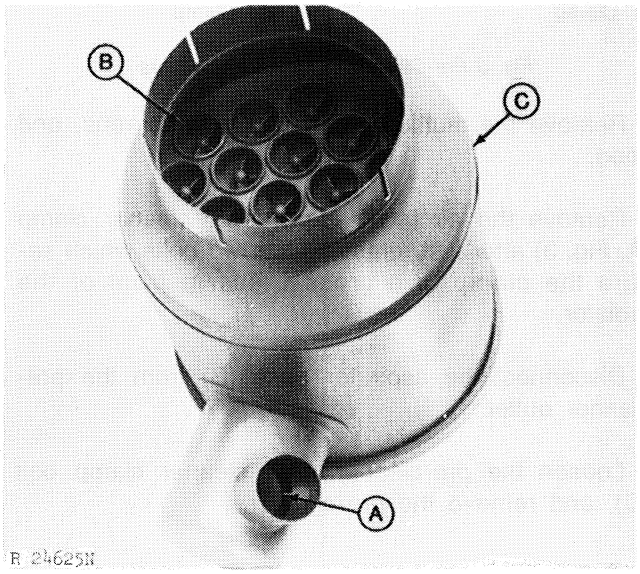

A—Valve
B—Deflectors
C—Pre-Cleaner Body

Fig. 2-Pre-Cleaner

General Information—Continued

pre-cleaner (C). Incoming air is put into a swirling motion by the deflectors, causing a large percentage of the dust to be separated from the air by centrifugal force. This dust is removed from the pre-cleaner, and discharged out the exhaust pipe by aspirator vacuum. A one-way check valve (A) is built into the pre-cleaner outlet to prevent exhaust gases from entering the air cleaner in event there is a back-flow of exhaust gases.

Removal

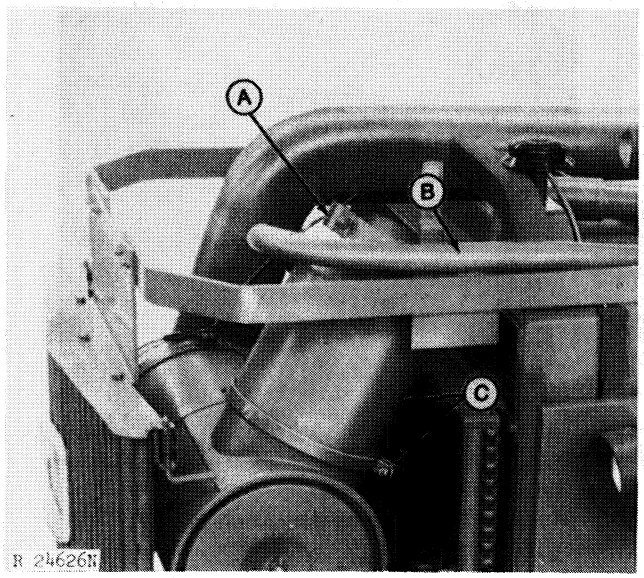

A—Air Intake Pipe-To-Pre-Cleaner Clamp
B—Aspirator Hose
C—Pre-Cleaner and Clamp

Fig. 3-Pre-Cleaner Removal Procedures

Remove the muffler, air stack, grille screens, and hood.

Remove the air intake pipe-to-pre-cleaner clamp (A, Fig. 3) after first removing the two bolts which secure the clamp to a cross brace in front of the radiator.

Disconnect the aspirator hose (B) from the pre-cleaner outlet.

Loosen the pre-cleaner-to-air cleaner clamp bolt (C), and remove the pre-cleaner.

Inspection and Service

Inspect the tubes and deflectors to make sure there are not restrictions present. If restricted, clean as required.

Inspect the outlet check valve for free movement. Should valve stick or bind, try to free by moving back and forth several times until it moves freely.

Install a new pre-cleaner assembly when it fails to perform satisfactorily or is damaged beyond minor repair.

Installation

Install pre-cleaner assembly on air cleaner, and install air intake pipe. Tighten clamp bolts.

Check aspirator hose condition. Replace if cracked, split, or deteriorated in any way. Tighten the front hose clamp, and test the aspirator vacuum.

ASPIRATOR

General Information

The purpose of the aspirator is to expel the dust which has been separated from the intake air at the precleaner.

A venturi is built into the exhaust ejector portion of the muffler to increase the exhaust velocity. This increased velocity produces a vacuum at the venturi. A tube is inserted into the muffler so that one end is at the location where the vacuum is produced. The other end protrudes from the muffler to receive the pre-cleaner aspirator tube.

Testing Aspirator Vacuum

The aspirator (muffler) vacuum should be tested periodically.

To test the aspirator vacuum, disconnect the pre-cleaner hose from the aspirator tube (A, Fig. 4), and remove the tube from the muffler.

Using a spare R58323 aspirator tube, drill a hole in the tube large enough to receive a 1/4-inch pipe coupling, and weld in position. Connect tube to hose and muffler.

Attach a JDST-11 Water Vacuum Gauge (B). Start engine and operate at full load. Aspirator vacuum should be a minimum of 12 in. (29.9 mbar) of water.

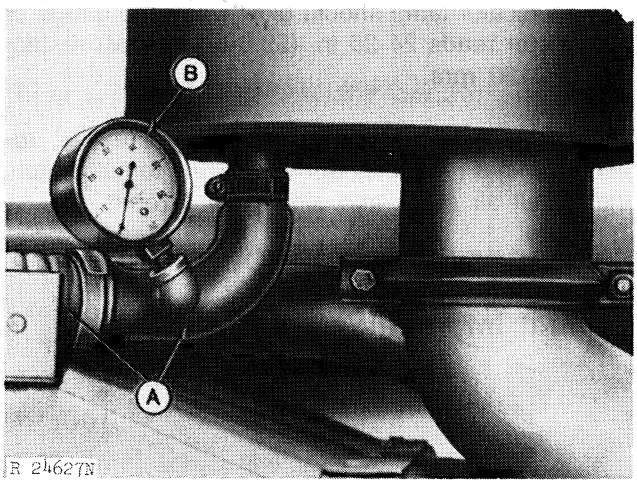

A—Aspirator Tube and Hose

B—JDST-11 Gauge

Fig. 4-Measuring Aspirator Vacuum

AIR CLEANER

General Information

Most of the dust present in the intake air is removed at the pre-cleaner. The remaining dust is removed and retained in the primary filter before the air passes into the engine. Should the primary element become ruptured, the safety element retains the dust that would otherwise enter the engine.

Removal

Remove the pre-cleaner (C, Fig. 5). Refer to previous page for instructions.

Disconnect the air intake hose (B) at the air cleaner outlet.

Disconnect the restriction indicator switch wire (D).

Loosen the clamp bolts on top of air cleaner body, and remove the air cleaner. The air cleaner may also be removed by taking out the four clamp-to-mounting bracket screws (E), and removing air cleaner with clamps (A) attached.

Inspection and Repair

The air cleaner body should be carefully inspected for cracks or holes which would permit dust to enter. Repair as required.

Service the filter elements whenever a tune-up or overhaul is to be performed on the engine. See the tractor operator's manual for filter element service instructions.

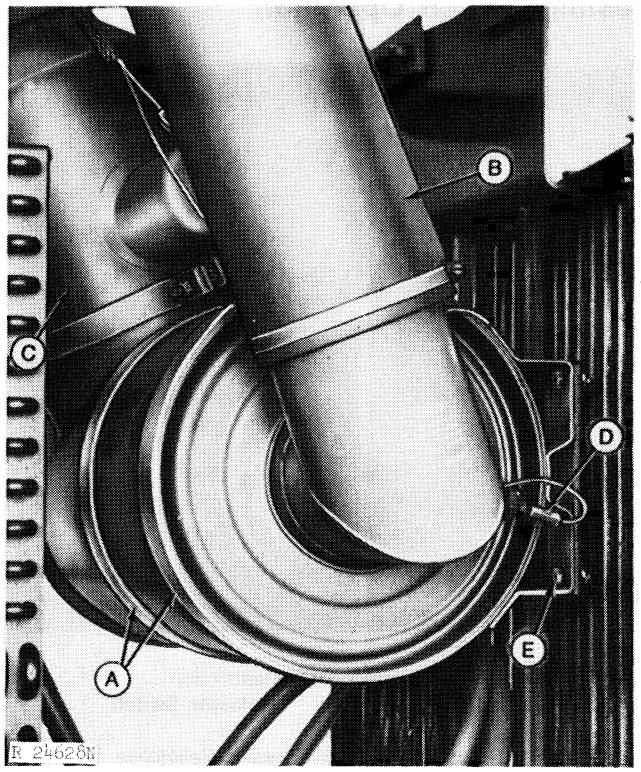

A—Clamps
B—Air Intake Hose
C—Pre-Cleaner
D—Restriction Indicator Switch Wire
E—Clamp-to-Mounting Bracket Screws

Fig. 5-Air Cleaner Mounting

Installation

Reverse the removal steps, making sure all connections are tight.

Install air stack, hood, and side grille screens.

RESTRICTION INDICATOR SWITCH

General Information

A restriction indicator switch (Fig. 5) located on the air cleaner outlet activates an indicator lamp on the dash to warn the operator whenever excessive restriction is present in the air cleaner.

Operation of the restriction indicator switch should be checked whenever a tune-up or overhaul has been performed on the engine, or whenever it is suspected that the switch is not operating properly.

Litho in U.S.A.

Testing Switch Operation

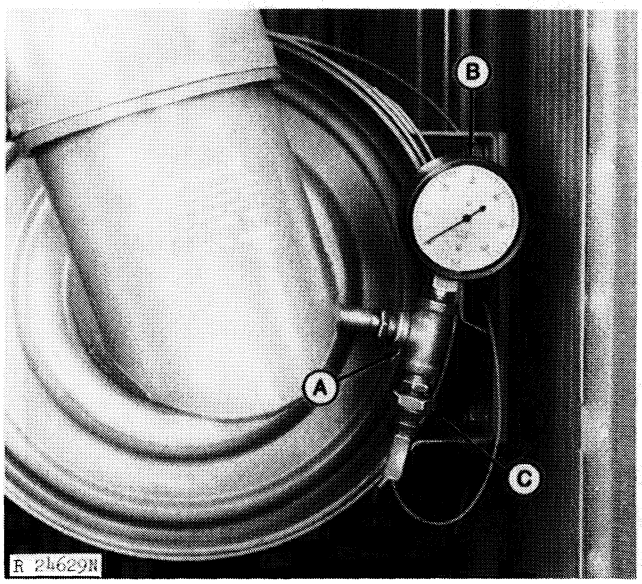

A—"T" Fitting
B—JDST-11 Gauge
C—Restriction Indicator Switch

Fig. 6-Testing Air Intake System Restriction

To test the restriction indicator switch operation, or to determine the amount of restriction in the air intake system, use a D-05022ST Water Vacuum Gauge (B, Fig. 6) calibrated in inches of water. (Refer to "SPECIAL TOOLS".) A water manometer calibrated in inches of water may also be used.

Run the engine and bring to operating temperature. Remove the side grille screens and air stack.

Be sure that the indicator lamp bulb is good and that all electrical connections are clean and sound. The air cleaner filter elements must be clean and in place. If the filter elements are not clean, refer to the tractor operator's manual for element cleaning instructions, or install new elements.

Install a "T" fitting (A) at the air cleaner outlet. Attach D-05022ST gauge and restriction indicator switch (C) to "T" fitting. Connect wiring lead to switch.

Run the engine at fast idle and use a piece of sheet metal or cardboard to gradually cover the precleaner intake opening. Note the action of the indicator lamp in relation to the reading on vacuum gauge or manometer. Compare with the following specifications.

Air intake vacuum at 2100 rpm (full load) and with new filter elements:

Without extension

8430 Tractor.....6-1/2 in. (16.2 mbar)
8630 Tractor..... 10 in. (24.9 mbar)
Maximum permitted..... 25 in. (62.3 mbar)

The indicator lamp should glow when the gauge or manometer reads 24-26 in. (59.8-64.8 mbar) restriction at 2100 rpm.

If the restriction indicator switch is defective, replace it with a new one. Connect wiring to the switch, and install air stack and side grille screens.

AIRESEARCH TURBOCHARGERS

General Information

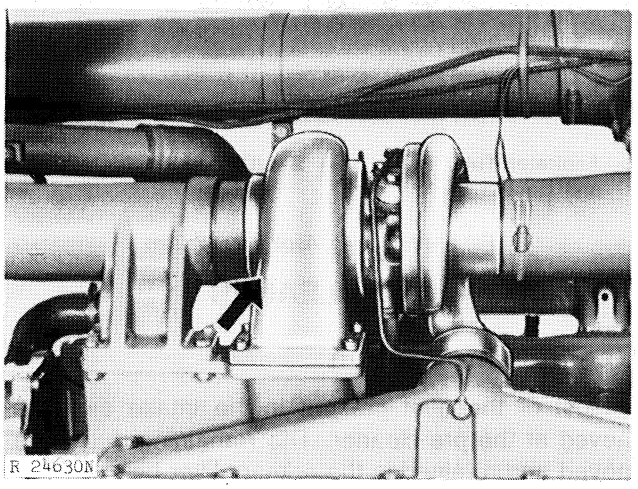

Fig. 7-AiResearch Model TV-6102 Turbocharger

AiResearch Turbochargers feature a radial inward-flow turbine, centrifugal impeller, center housing, turbine housing, and compressor housing. Fig. 7 illustrates the Model TV-6102 turbocharger used on the 8630 Tractor.

Engine oil under pressure from the engine lubrication system is pumped through passages in the center housing and directed to bearings and thrust washers through passages in the center housing and thrust plate. Oil is sealed from the compressor and turbine by seals at both ends of the center housing.

The turbocharger contains two floating bearings that have a clearance between the bearing O.D. and housing wall as well as a clearance between the bearing I.D. and the shaft O.D.

These clearances are lubricated by the oil supply and the bearings are protected by a cushion of oil.

Discharge oil drains by gravity from the center housing to the engine crankcase.

Refer to Chapter 6 of FOS Manual 30-ENGINES.

Litho in U.S.A.

Diagnosing Malfunctions

Usually, the first two indications of trouble in a turbocharger are noise and a noticeable loss of power. Before removing the turbocharger, make sure some other engine component is not at fault. Use the following information as a guide to locate the source of the problem:

Engine Lacks Power

Dirty air cleaner filter element
Restriction in air cleaner-to-turbocharger pipe or hose
Restriction in engine exhaust system
Turbocharger flanges, clamps, or bolts loose
Intake manifold cracked; gaskets loose or missing; connections loose
Turbine housing damaged or restricted
Worn journal bearings
Excessive dirt build-up in compressor housing
Excessive carbon build-up behind turbine wheel

Excessive Black Smoke

Dirty air cleaner filter element
Restriction in air cleaner-to-turbocharger pipe or hose
Restriction in engine exhaust system
Turbocharger flanges, clamps, or bolts loose
Intake manifold cracked; gaskets loose or missing; connections loose
Turbine housing damaged or restricted
Worn journal bearings
Excessive dirt build-up in compressor housing
Excessive carbon build-up behind turbine wheel

Excessive Blue Smoke

Dirty air cleaner filter element
Restriction in air cleaner-to-turbocharge pipe or hose
Turbocharger flanges, clamps, or bolts loose
Intake manifold cracked; gaskets loose or missing; connections loose
Defective back plate-to-center housing rubber O-ring packing
Excessive dirt build-up in compressor housing
Excessive carbon build-up behind turbine wheel
Excessive engine idling
Coked or sludged center housing

Excessive Oil Consumption

Plugged engine crankcase breather
Turbocharger flanges, clamps, or bolts loose
Restricted turbocharger oil drain pipe
Defective back plate-to-center housing rubber O-ring packing
Worn journal bearings
Excessive engine idling
Coked or sludged center housing

Excessive Oil (Turbine End)

Plugged engine crankcase breather
Restriction in engine exhaust system
Turbocharger flanges, clamps, or bolts loose
Restricted turbocharger inlet oil pressure pipe
Restricted turbocharger oil drain pipe
Defective back plate-to-center housing rubber O-ring packing
Worn journal bearings
Excessive carbon build-up behind turbine wheel
Excessive engine idling
Coked or sludged center housing

Excessive Oil (Compressor End)

Dirty air cleaner filter element
Plugged engine crankcase breather
Restriction in air cleaner-to-turbocharger pipe or hose
Turbocharger flanges, clamps, or bolts loose
Inlet manifold cracked; gaskets loose or missing; connections loose
Restricted turbocharger inlet oil pressure pipe
Defective back plate-to-center housing rubber O-ring packing
Worn journal bearings
Excessive dirt build-up in compressor housing
Excessive engine idling

Insufficient Lubrication

Improper lubricating oil being used
Restricted turbocharger oil inlet pressure pipe
Oil lag (excessive time before oil reaches turbocharger at start-up)
Acceleration too fast at initial start
Not enough warm-up time
Leaking inlet oil pressure pipe

Litho in U.S.A.

Diagnosing Malfunctions—Continued

Oil In Exhaust Manifold

Plugged engine crankcase breather
Restriction in engine exhaust system
Defective back plate-to-center housing rubber O-ring packing
Worn journal bearings
Excessive carbon build-up behind turbine wheel
Excessive engine idling
Coked or sludged center housing

Drag Or Bind In Rotating Assembly

Air cleaner element not sealing correctly; loose air cleaner-to-turbocharger pipe or hose connections
Restriction in air cleaner-to-turbocharger pipe or hose
Restriction in engine exhaust system
Turbocharger flanges, clamps, or bolts loose
Insufficient lubrication
Lubricating oil contaminated with foreign material
Improper lubricating oil being used
Restricted turbocharger oil inlet pressure pipe
Worn journal bearings
Excessive dirt build-up in compressor housing
Excessive carbon build-up behind turbine wheel
Leaking inlet oil pressure pipe
Coked or sludged center housing

Damaged Turbine Wheel

Restriction in engine exhaust system
Turbocharger flanges, clamps, or bolts loose
Physical damage or restriction in turbine housing
Worn journal bearings
Excessive dirt build-up in compressor housing
Excessive carbon build-up behind turbine wheel
Coked or sludged center housing

Damaged Compressor Wheel

Air cleaner element not sealing correctly; loose air cleaner-to-turbocharger pipe or hose connections
Restriction in air cleaner-to-turbocharger pipe or hose
Turbocharger flanges, clamps, or bolts loose
Worn journal bearings
Excessive dirt build-up in compressor housing
Acceleration too fast at initial start
Not enough warm-up time

Worn Bearings, Journals, and Bearing Bores

Restriction in air cleaner-to-turbocharger pipe or hose
Restriction in exhaust system
Turbocharger flanges, clamps, or bolts loose
Oil lag (excessive time before oil reaches turbocharger at start-up)
Insufficient lubrication
Lubricating oil contaminated with foreign material
Improper engine lubricating oil being used
Restricted turbocharger inlet oil pressure pipe
Acceleration too fast at initial start
Not enough warm-up time
Leaking inlet oil pressure pipe

Noise Or Vibrations

Dirty air cleaner filter element
Air cleaner element not sealing correctly; loose air cleaner-to-turbocharger pipe or hose connections
Restriction in air cleaner-to-turbocharger pipe or hose
Restriction in engine exhaust system
Turbocharger flanges, clamps, or bolts loose
Intake manifold cracked; gaskets loose or missing; connections loose
Exhaust manifold cracked; gaskets loose, blown, or missing
Turbine housing damaged or restricted
Worn journal bearings
Excessive dirt build-up in compressor housing
Excessive carbon build-up behind turbine wheel

Coked or Sludged Center Housing

Plugged engine crankcase breather
Improper engine lubricating oil being used
Restricted turbocharger oil drain pipe

Model T-04B23 (8430 Tractor)

Removal

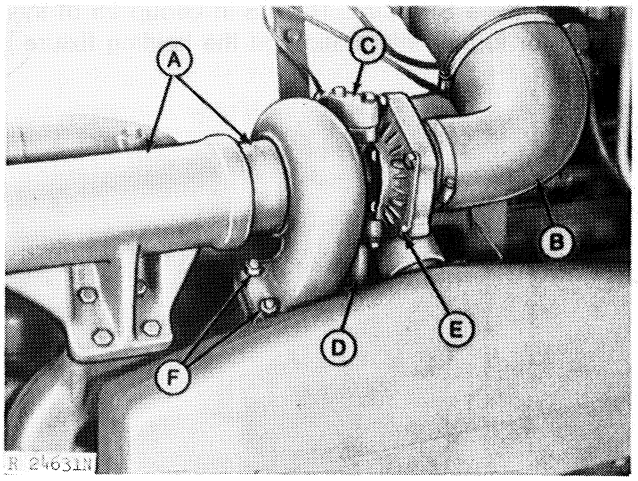

A—Exhaust Elbow and Adapter
B—Hose
C—Inlet Manifold
D—Return Pipe
E—Compressor Housing Cap Screws
F—Turbine Mounting Stud Nuts

Fig. 8-Turbocharger Removal Procedures

Remove side grille screens, muffler, air stack, and hood.

Disconnect and remove the air cleaner-to-turbocharger air intake elbow hose (B, Fig. 8).

Disconnect and remove exhaust elbow (A).

Disconnect the inlet oil pressure manifold (C) and return oil pipe (D).

Remove the turbocharger mounting flange stud nuts (F).

Loosen the compressor housing cap screws (E), and lift turbocharger off mounting studs. Disengage turbocharger and coupling from intercooler (Fig. 9).

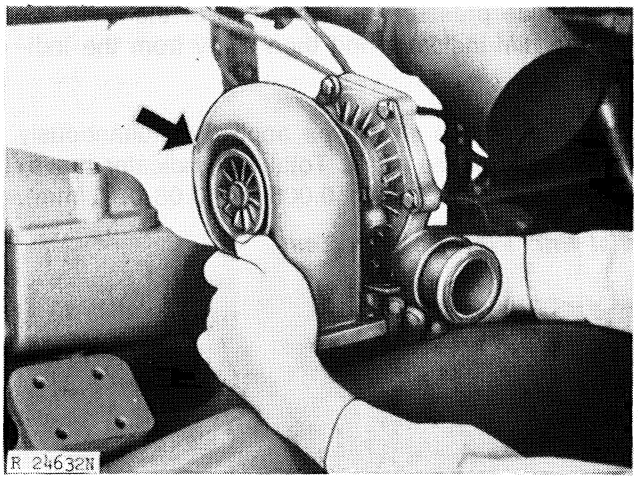

Fig. 9-Removing Model T-04B23

Tests

Radial Bearing Test (Bearing Clearance)

Perform this test to determine whether it is necessary to replace or repair the thrust bearing, radial bearing, and/or rotating assembly of the center rotating assembly.

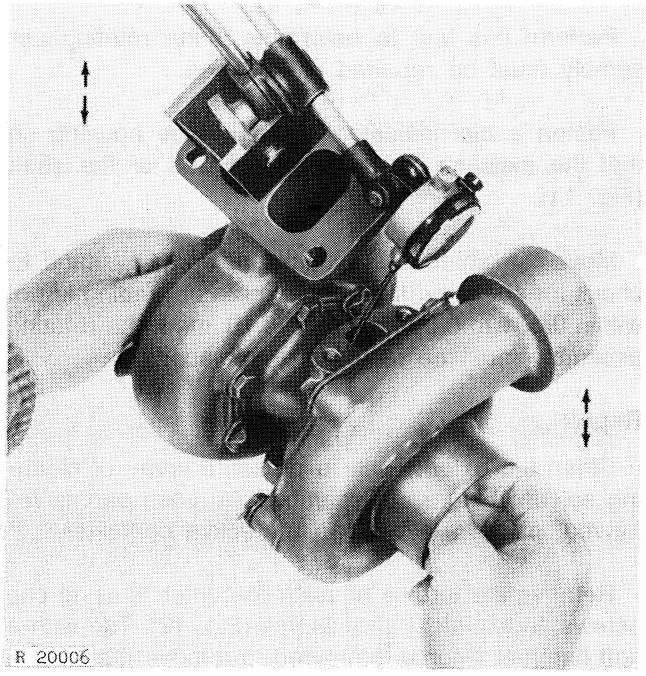

Fig. 10-Radial Bearing Test

Fasten a dial indicator (plunger type) to the turbocharger turbine housing mounting flange (Fig. 10).

Radial Bearing Test—Continued

Apply side pressure at both ends of the shaft toward the dial indicator and then away from the indicator.

Equal pressures should be applied simultaneously to both ends of the shaft. Total dial indicator movement should be 0.003 to 0.006 in. (0.08-0.15 mm).

Axial End Play Bearing Test

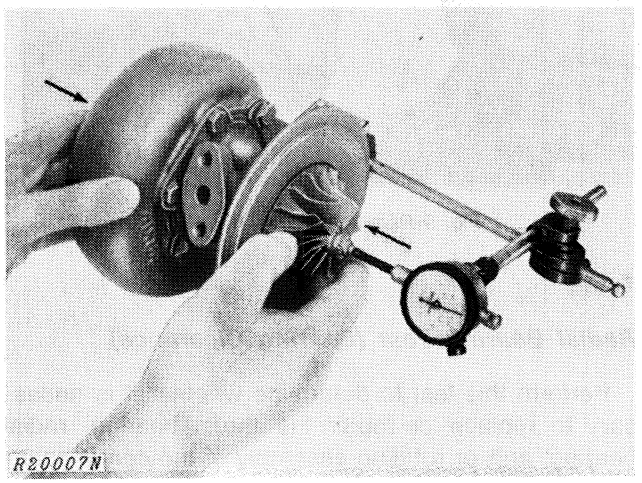

Fig. 11-End Play Bearing Test

Perform this test to determine if the rotating assembly must be repaired or replaced.

Fasten a dial indicator to the turbine housing so that the indicator tip rests on the end of the shaft (Fig. 11).

Move the shaft axially back and forth by hand to check for end play. If the total indicator reading is not within 0.001 to 0.004 in. (0.03-0.10 mm), the rotating assembly must be repaired or replaced.

Repair

Clean the exterior with a pressure spray of cleaning solvent before disassembly. As each part is removed, place it in a clean protective container.

Remove the turbine housing-to-center housing cap screws, lock plates, and clamps (Fig. 12). Tap with a soft hammer if force is needed to remove the turbine housing, being careful not to damage the turbine wheel.

Mount a suitable holding fixture (A, Fig. 12) in a vise, and insert the turbine wheel into the fixture. Remove the compressor wheel retaining nut, using a double universal socket to avoid possible bending of the shaft. (See SPECIAL TOOLS in Group 25 of this section for further information on the holding fixture.)

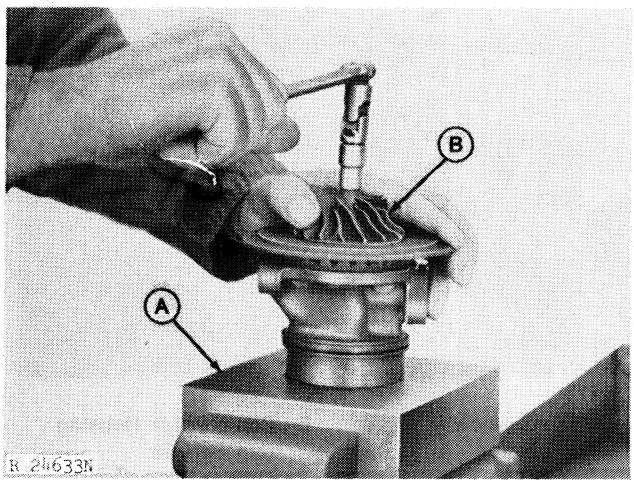

A—Wood Holding Fixture
B—Compressor Wheel

Fig. 12-Removing Compressor Wheel Retaining Nut

Remove the compressor wheel (B) from the shaft. Then remove the turbine shaft and wheel assembly (C, Fig. 13) from the center housing, keeping it centered with the bearings until it is clear of the housing. Fig. 13 shows the turbine wheel assembly removed from the center housing. The wheel shroud (D) and piston ring (E) may be removed at this time.

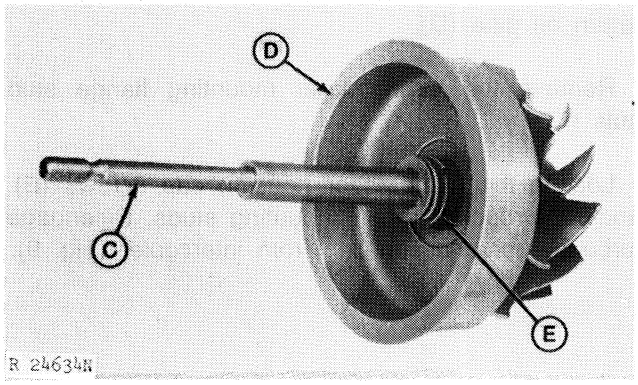

C—Shaft and Wheel Assembly
D—Wheel Shroud
E—Piston Ring

Fig. 13-Shaft and Wheel Assembly

Remove the back plate-to-center housing cap screws and lockplates (15 and 16, Fig. 14), then remove the backplate, by tapping with a soft mallet.

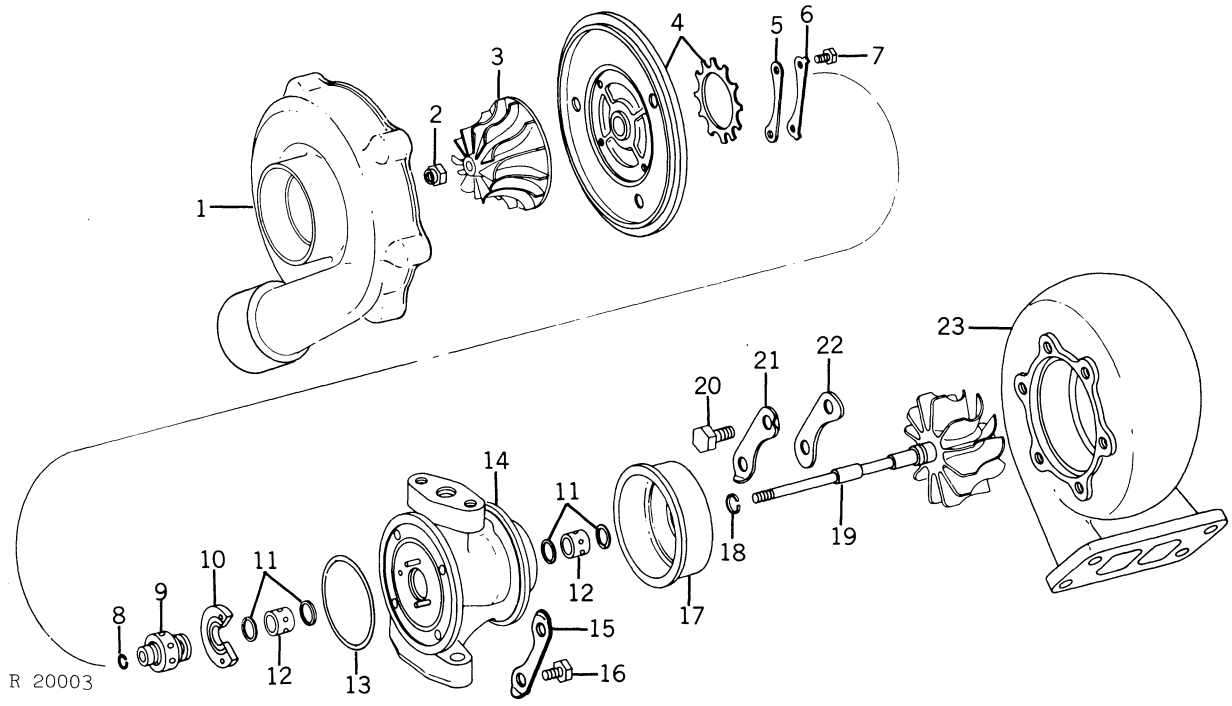

1—Compressor Housing
2—Lock Nut
3—Impeller
4—Backplate Assembly
5—Clamp
6—Lock Plate
7—Cap Screw
8—Piston Ring
9—Thrust Collar
10—Thrust Washer
11—Retaining Ring (4 used)
12—Bearing (2 used)
13—O-ring
14—Center Housing
15—Lock Plate (4 used)
16—Cap Screw (4 used)
17—Wheel Shroud
18—Piston Ring
19—Turbine Wheel with Shaft
20—Special Bolt (6 used)
21—Lock Plate (3 used)
22—Clamp (3 used)
23—Turbine Housing

Fig. 14-AiResearch Turbocharger - Model T-04B23

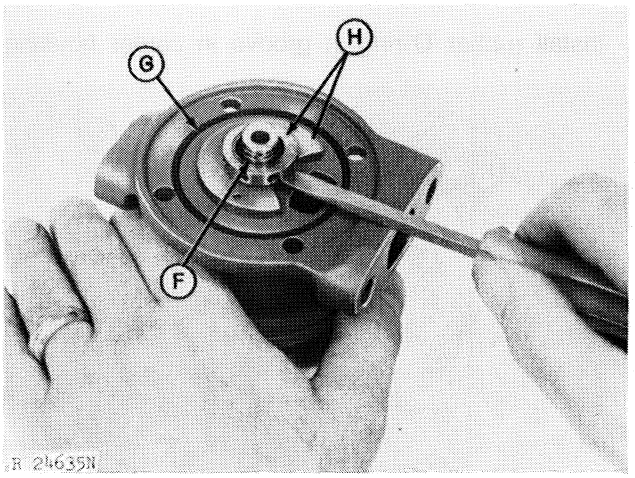

F—Piston Ring
G—O-Ring
H—Thrust Collar and Washer

Fig. 15-Removing Thrust Collar and Thrust Washer

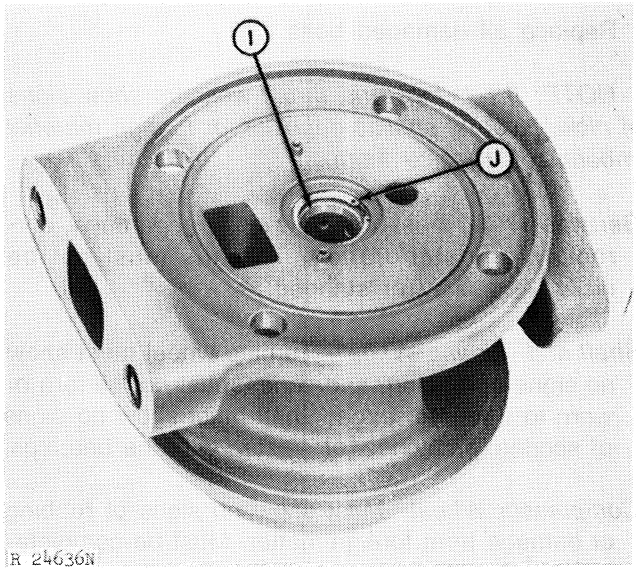

I—Bearing
J—Retaining Ring

Fig. 16-Retainer Ring and Bearing Removal

Repair—Continued

Remove the thrust collar and thrust washer (H, Fig. 15). Remove the rubber O-ring (G) from housing.

Remove bearings (I, Fig. 16) and retaining rings (J) from the center housing.

Cleaning

Before cleaning, inspect parts for signs of burning, rubbing, or other damage which might not be evident after cleaning.

Soak all parts in clean carbon solvent for about 25 minutes. After soaking, use a stiff bristle brush to remove all dirt particles. Dry parts thoroughly.

NOTE: Normally, a light accumulation of carbon deposits will not affect turbine wheel operation.

Inspection

General Inspection requirements are given below.

Burnish or polish out minor surface damage. Use silicon carbide abrasive cloth for aluminum parts, and crocus abrasive cloth for the steel parts.

Replace any part which fails to meet the requirements given in the inspection procedures.

Replace the following parts: Seal ring, lock plates, piston rings, and bearing retainers.

Replace all damaged bolts.

NOTE: If bearings and thrust washers show signs of nicks, scores, shellac deposits, or foreign material imbedment, replace them.

General—Parts must not show signs of damage, corrosion, or deterioration. Threads must not be nicked, crossed, or stripped.

Shaft and Turbine Wheel—Turbine wheel must show no signs of rubbing, and vanes must not be torn or worn to a feather edge. Shaft must show no signs of scoring, scratches, or seizure with the bearings.

Compressor Wheel—Must show no signs of rubbing or damage from foreign matter. Must be completely free of dirt or other foreign material. Impeller bore must not be galled.

Seal Parts—Must show no signs of rubbing or scoring of the running faces.

Housings—Must show no signs of contact with rotating parts. Oil and air passages must be clean and free of obstructions.

Assembly

Check each part prior to installation to insure cleanliness. As parts are assembled, cover openings to prevent entry of dirt or other foreign material.

NOTE: If any particle falls into the turbocharger during assembly, remove the particle immediately, even though extensive disassembly is required.

Check piston ring clearance in turbine wheel ring groove. Check for burrs or foreign matter.

Lubricate and install bearings and retaining rings.

Install piston ring on turbine wheel shaft. With turbine wheel shaft upright, guide shaft through the wheel shroud and bearings. Be careful not to scuff or scratch the bearings. Do not use force to compress piston ring into place. A gentle rocking and pushing action will allow the piston ring to seat and the shaft to bottom. A thin tool, such as a dental pick may be used as an aid in compressing the ring if difficulty is encountered.

Install piston ring on thrust collar and place thrust collar over shaft, and flat against the center housing, engaging the pins in the back of the thrust washer.

Install rubber O-ring in groove in center housing.

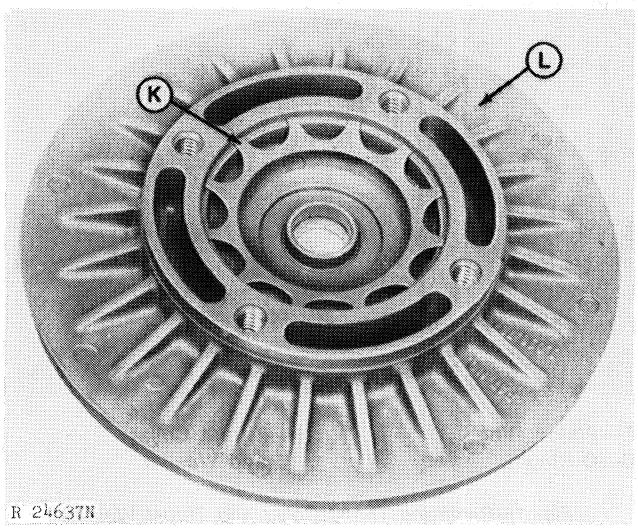

K—Spring **L—Back Plate**

Fig. 17-Back Plate Assembly

Assembly—Continued

Be sure that thrust spring (K, Fig. 17) is installed in back plate (L).

IMPORTANT: Back plate and spring are sold only as an assembly. The installed depth of the spring is a controlled dimension. Therefore, do not replace or remove the spring by itself. Cleaning can be done without removing the spring from the back plate.

Align mounting holes of center housing and back plate and install back plate over shaft and thrust collar. Use care not to break piston ring when engaging seal in back plate bore. Back plate is easily installed if open end of piston ring is engaged in back plate bore first.

Install back plate-to-center housing cap screws and lock plates. Tighten cap screws to 75-90 in-lbs (8.47-9.04 Nm) torque, and bend ears of lock plates against head of cap screw.

Install compressor wheel and tighten nut to 18-20 in-lbs (2.03-2.26 Nm) torque; then tighten through an angle of 90°. This is sufficient to stretch the shaft 0.0055-0.0065 inch (0.140-0.165 mm) for proper installation.

Check axial end play and radial movements. If bearing clearance is not within 0.003-0.006 in. (0.08-0.15 mm) or if bearing end play is not within 0.001-0.004 in. (0.02-0.10 mm), recheck parts and evaluate.

Check clearance between wheel shroud and turbine wheel.

Install compressor housing on center housing, but do not tighten cap screws at this time. Leave the cap screws loose until turbocharger has been mounted.

Orient turbine housing to center housing. Coat bolt threads with a high temperature, anti-seizing compound. Install bolts, clamps, and lock plates. Tighten bolts to 100-130 in-lbs (11.30-14.69 Nm) torque, and bend ears of lock plates against head of cap screw.

After assembly, push the rotating assembly as far away as possible from the turbine end and check for binding. Repeat check, pushing from the compressor end.

Installation

Just prior to mounting the turbocharger, prime the turbocharger lubrication system. Fill the center housing with new engine oil through the oil drain hole. Turn the rotating assembly by hand to lubricate the bearings and thrust washer.

Install turbocharger on engine, and install new rubber O-rings on coupler (turbocharger-to-intercooler). Use a new mounting gasket.

Check alignment of compressor housing to intake manifold. If necessary, rotate compressor housing so manifold coupling is radially centered in compressor housing and intake manifold.

Tighten the mounting stud nuts, then tighten the back plate-to-compressor housing cap screws to 110-130 in-lbs (12.43-14.6 Nm) torque. Bend the ears of lock plates against head of cap screws.

When installing turbocharger exhaust adapter and exhaust elbow be certain that the installation does not apply a force on the turbine housing. The exhaust adapter must have 1/16-inch (1.59 mm) minimum end play and rotate freely.

Inspect the air cleaner-to-turbocharger hoses to see that they are in good condition. If they are not, replace with new ones. Install air intake pipe, and tighten hose clamps securely.

IMPORTANT: Since the greatest amount of suction occurs between the air cleaner and turbocharger, it is essential that the hose connections are tight to prevent entry of dirt into the engine.

Connect the lubricating oil inlet manifold and return pipe to the turbocharger, using new gaskets.

Install hood, muffler, and air stack.

When starting engine with a new or repaired turbocharger, hold the engine shut-off knob out and crank the engine with the starter until the engine oil pressure gauge registers sufficient pressure. Run engine at low idle, and check oil inlet connection for leaks.

Model TV-6102 (8630 Tractor)

Removal

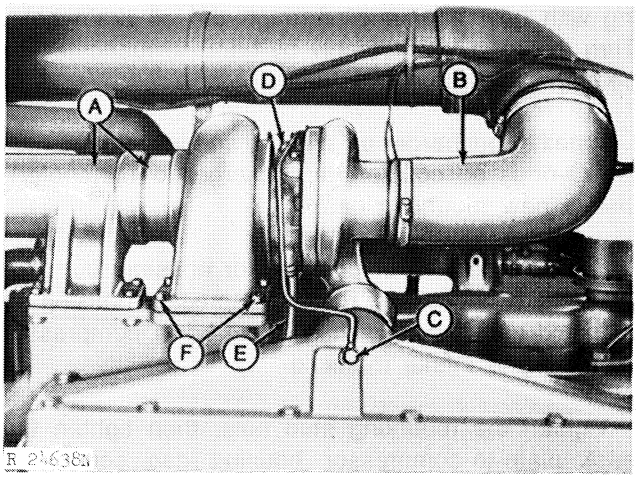

A—Exhaust Elbow and Adapter
B—Hose
C—Ether Aid Pipe
D—Inlet Oil Pressure Manifold
E—Return Oil Pipe
F—Stud Nuts

Fig. 18-Turbocharger Removal Procedures

Remove the side grille screens, muffler, air stack and hood.

Disconnect and remove the air cleaner-to-turbocharger air intake elbow hose (B, Fig. 18).

Disconnect and remove exhaust elbow (A).

Disconnect and remove the ether starting aid pipe (C).

Disconnect the inlet oil pressure manifold (D) and return oil pipe (E).

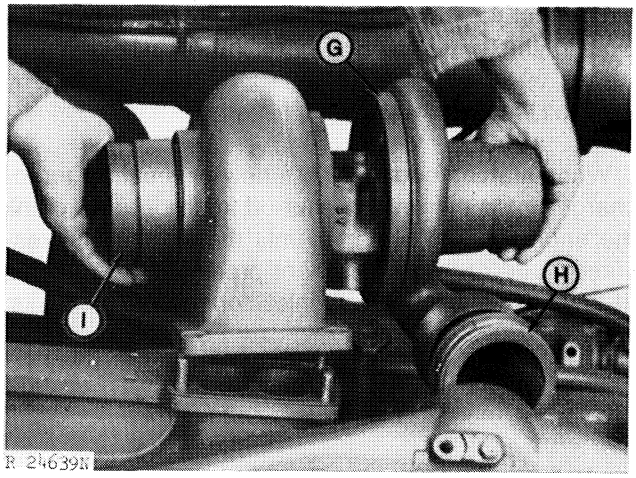

G—"V" Band Clamp
H—Coupling
I—Adapter

Fig. 19-Removing Model TV-6102 Turbocharger

Remove the turbocharger mounting flange stud nuts (F).

Loosen the compressor housing V-band clamp (G, Fig. 19) to make it easier to remove coupling (H) from intercooler while lifting turbocharger off of mounting studs. Adapter (I) may be removed either before or after the turbocharger has been removed. Lift-off turbocharger.

Tests

Radial Bearing Test (Bearing Clearance)

Perform this test to determine whether it is necessary to replace or repair the thrust bearing, radial bearing, and/or rotating assembly of the center rotating assembly.

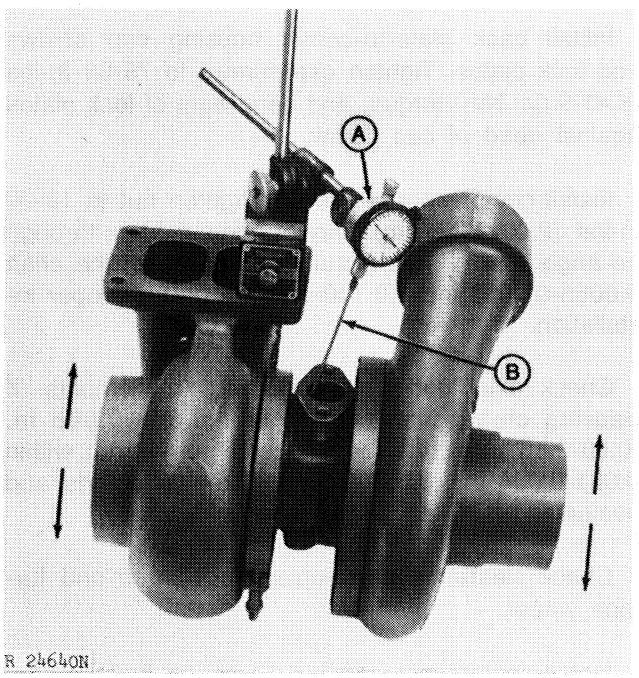

A—Dial Indicator
B—Indicator Extension

Fig. 20-Radial Bearing Test

Fasten a dial indicator (A, Fig. 20) to the turbocharger turbine housing mounting flange, using an extension (B) long enough to permit the tip end to rest on rotating shaft.

Apply side pressure at both ends of the shaft toward the dial indicator and then away from the indicator (Fig. 20).

Equal pressures should be applied simultaneously to both ends of the shaft. Total dial indicator movement should be 0.003 to 0.006 in. (0.08-0.15 mm).

Axial End Play Bearing Test

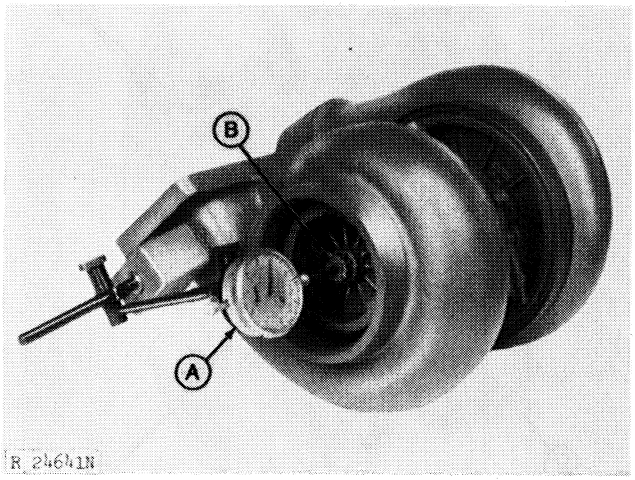

A—Dial Indicator

B—Turbine Wheel Shaft

Fig. 21-End Play Bearing Test

Perform this test to determine if the rotating assembly must be repaired or replaced.

Fasten a dial indicator (A, Fig. 21) to the turbine housing so that the indicator tip rests on the end of the shaft (B).

Move the shaft axially back and forth by hand to check for end play. If the total indicator reading is not within 0.003 to 0.010 in. (0.08-0.25 mm), the rotating assembly must be repaired or replaced.

Repair

Clean the exterior with a pressure spray of cleaning solvent before disassembly. As each part is removed, place it in a clean protective container.

Loosen the "V"-band clamp nut (A, Fig. 22) on both clamps. Remove the compressor housing (B) and turbine housing (F) from center housing (E). Pull coupling (C) out of compressor housing, and remove O-rings (D).

Fasten a 11/16-inch, 12-point box end wrench (I, Fig. 23) in a vise, and insert the turbine wheel (G) end of shaft into wrench. If desired, a wood holding fixture can be made to hold the turbine wheel. (See SPECIAL TOOLS in Group 25 of this section for further information on the holding fixture.)

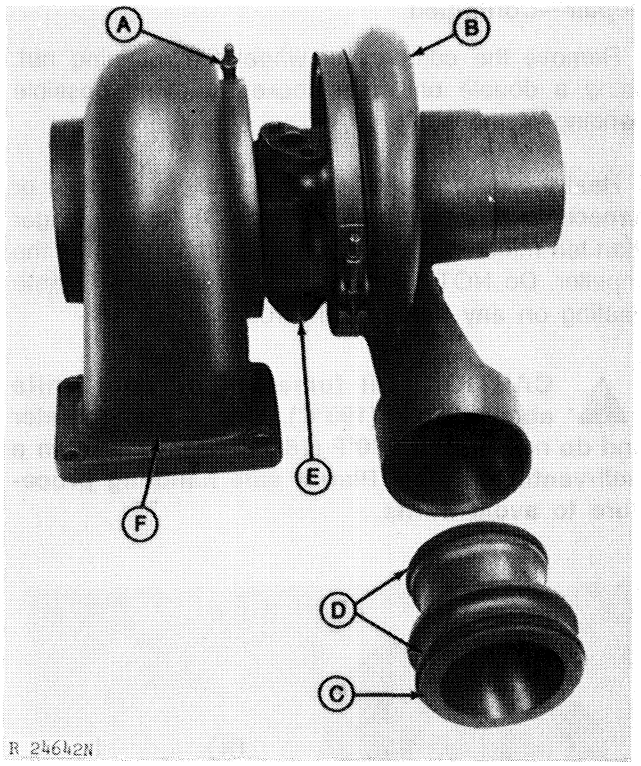

A—Clamp Nut
B—Compressor Housing
C—Coupling
D—O-Rings
E—Center Housing
F—Turbine Housing

Fig. 22-Disassembly Procedures

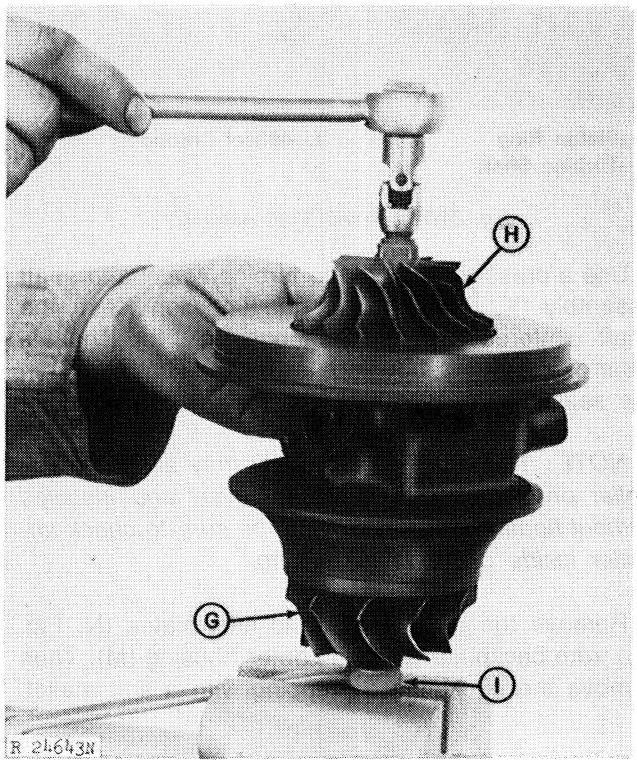

G—Turbine Wheel
H—Compressor Wheel
I—12-Point Box End Wrench

Fig. 23-Removing Compressor Wheel Retaining Nut

Repair—Continued

Remove the compressor wheel (H) retaining nut, using a double universal socket to avoid possible bending of the shaft.

Heat the remainder of the assembly in an oven or furnace to 325 to 360°F (163-18°C) for no longer than ten minutes. If hot oil is used, immerse only the impeller. Do NOT overheat. Do not use direct flame heating on any part of the turbocharger.

⚠ CAUTION: Oil fumes or oil can ignite above 380°F (193°C). Use a thermometer and do not exceed 360°F (182°C). Heat the oil in a well-ventilated area. Plan a safe handling procedure to avoid burns.

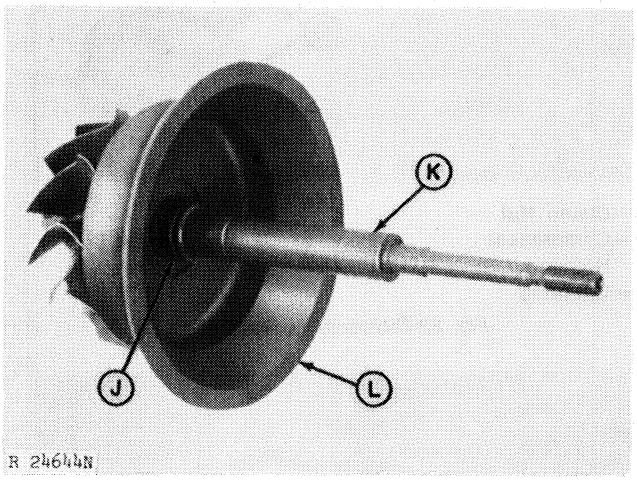

J—Piston Ring
K—Turbine Shaft
L—Wheel Shroud

Fig. 24-Wheel and Shaft Assembly

Use a press to remove the turbine wheel and shaft assembly (K, Fig. 24) from the impeller. Keep the shaft centered with the bearings until the shaft is clear of the center housing. Remove piston ring from the seal hub groove, and remove wheel shroud.

NOTE: The impeller-to-shaft fit may allow the impeller on some units to be removed and installed without heating. After removing, be sure to check impeller inside diameter for galling.

Remove the cap screws and lock plates (N, Fig. 25) from backplate (O) and center housing (M). Then remove the backplate by tapping with a soft mallet.

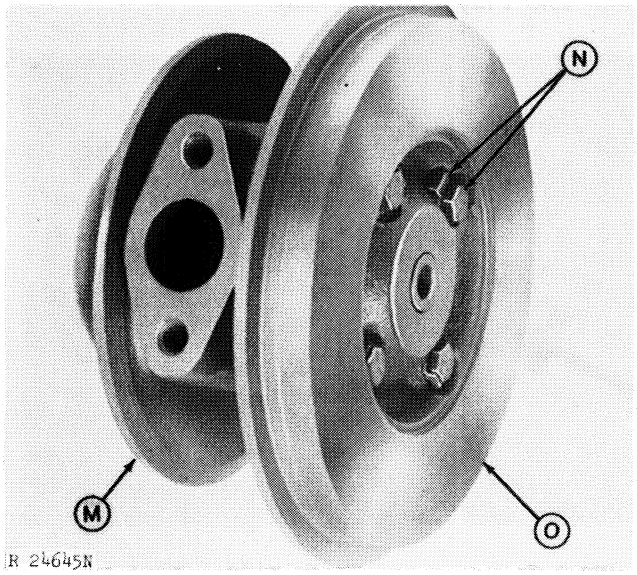

M—Center Housing
N—Cap Screws and Lock Plates
O—Backplate

Fig. 25-Backplate-To-Center Housing Cap Screws

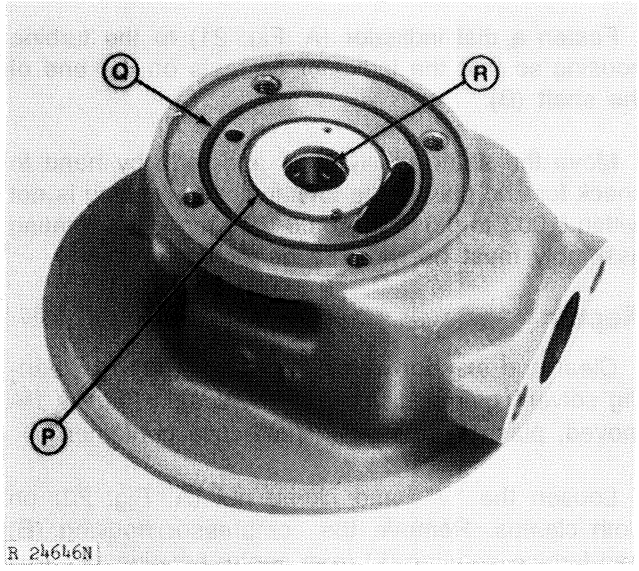

P—Thrust Washer
Q—Rubber Packing
R—Bearing

Fig. 26-Bearings and Rubber O-Ring

Remove the thrust washer (P, Fig. 26) and rubber packing from center housing. Remove bearings (R), washers, and retainers from housing.

Remove thrust collar (S, Fig. 27), and thrust spacer (T); then remove piston ring (U, Fig. 28) from thrust spacer.

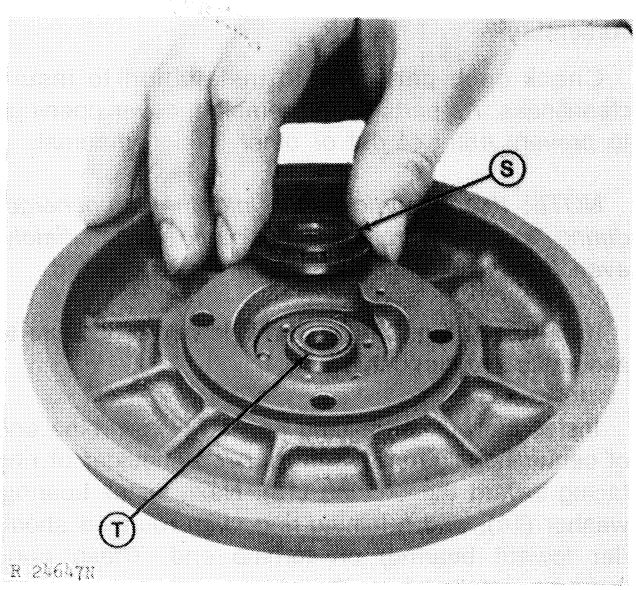

S—Thrust Collar **T—Thrust Spacer**

Fig. 27-Removing Thrust Collar

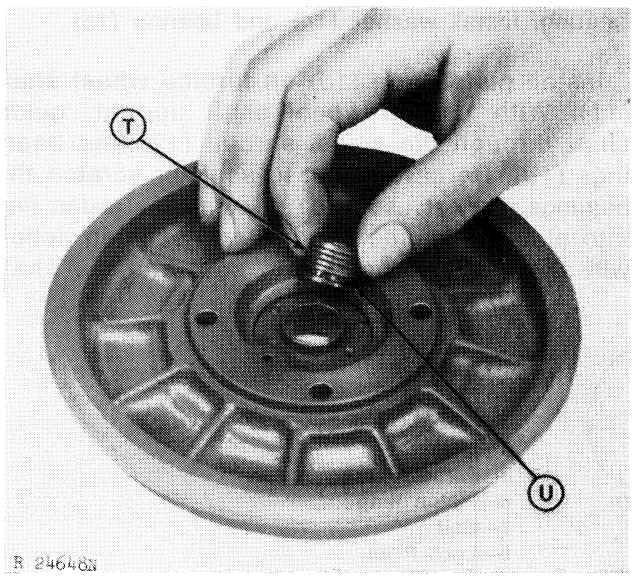

T—Thrust Spacer **U—Piston Ring**

Fig. 28-Removing Thrust Spacer

Cleaning

Before cleaning, inspect parts for signs of burning, rubbing, or other damage which might not be evident after cleaning.

Clean all parts in a non-caustic solution. Use a bristle brush, a plastic blade scraper, and dry compressed air to remove surface accumulation.

Do not use an abrasive cleaning method which might destroy or damage machined surfaces. Remove all carbonized oil from center housing.

NOTE: Normally, a light accumulation of carbon deposits will not affect turbine wheel operation.

Inspection

Burnish or polish out minor surface damage. Use silicon carbide abrasive cloth for aluminum parts, and crocus abrasive cloth for the steel parts.

Replace any part which fails to meet the requirements given in the inspection check list below. All service specifications listed are the maximum allowed. Replace those parts which fail to meet specifications.

The following parts should be replaced when the turbocharger is disassembled, regardless of their condition: rubber O-ring seal, lock plates, piston rings, journal bearings, bearing retainers, and thrust bearing.

General—Parts must not show signs of damage, corrosion, or deterioration. Threads must not be nicked, crossed, or stripped.

Center Housing—Check bearing bore I.D. - 0.985 in. (25.02 mm) maximum; seal bore I.D. - 0.825 in. (20.96 mm) maximum. Bore surfaces must be free of scores. Scrape or clean carbonized oil from internal surfaces if present.

Turbine Shaft Wheel—Check journal O.D. - 0.6245 in. (15.85 mm) minimum; check seal hub O.D. - 0.793 in. (20.14 mm) minimum. Journal surfaces must not be scored. Polish surfaces with crocus cloth. Wheel blades are permitted to have slight erosion. Blade tips must not be feather-edged or torn. Minimum tip thickness - 0.025 in. (0.64 mm). Check piston ring groove O.D. - 0.687 in. (17.45 mm); check ring groove width - 0.074 in. (1.88 mm). Ring groove shoulders must be free of step wear.

Inspection—Continued

Backplate—Check seal bore I.D. - 0.6895 in. (17.51 mm). Thrust surface must be clean and smooth.

Thrust Collar—Check bore I.D. - 0.316 in. (8.03 mm); check thickness - 0.297 in. (7.54 mm). Faces must be smooth. Polish with crocus cloth.

Thrust Spacer—Check O.D. - 0.670 in. (17.02 mm); check ring groove width - 0.0715 in. (1.88 mm). Ring groove shoulders must be free of step wear.

Thrust Washer—Replace regardless of condition.

Journal Bearings—Replace reagrdless of condition.

Compressor Wheel—Check bore I.D. - 0.3750 in. (9.53 mm). Replace if any evidence of rubbing, erosion, or nicks is noted.

Turbine Housing—Replace if discharge opening is warped or out of round. Also replace if it shows erosion, cracks, or heavy wheel rub on contour. A light wheel rub may be cleaned-up.

Turbine Wheel Shroud—Replace if warped, eroded, or heavily rubbed.

Assembly

Check each part prior to installation to insure cleanliness. As parts are assembled, cover openings to prevent entry of dirt or other foreign material.

NOTE: If any particle falls into the turbocharger during assembly, remove the particle immediately, even though extensive disassembly is required.

Referring to Fig. 29, use the following procedure to assemble the turbocharger:

Install the outer retaining ring (13) on turbine end of center housing (16) with rounded shoulder of ring facing toward the bearing (15). Next, install bearing, washer (14), and retaining ring (with rounded shoulder toward bearing) on turbine end. These parts must be installed from the compressor end of center housing.

Install the inner retaining ring (13) on compressor end of center housing with rounded shoulder toward bearing. Install washer (14) and bearing (15).

Install piston ring (10) on turbine wheel shaft (11). With turbine wheel shaft upright, guide shaft through the wheel shroud (12) and bearings (15). Be careful not to scuff or scratch the bearings. Do not use force to compress piston ring into place. A gentle rocking and pushing action will allow the piston ring to seat and the shaft

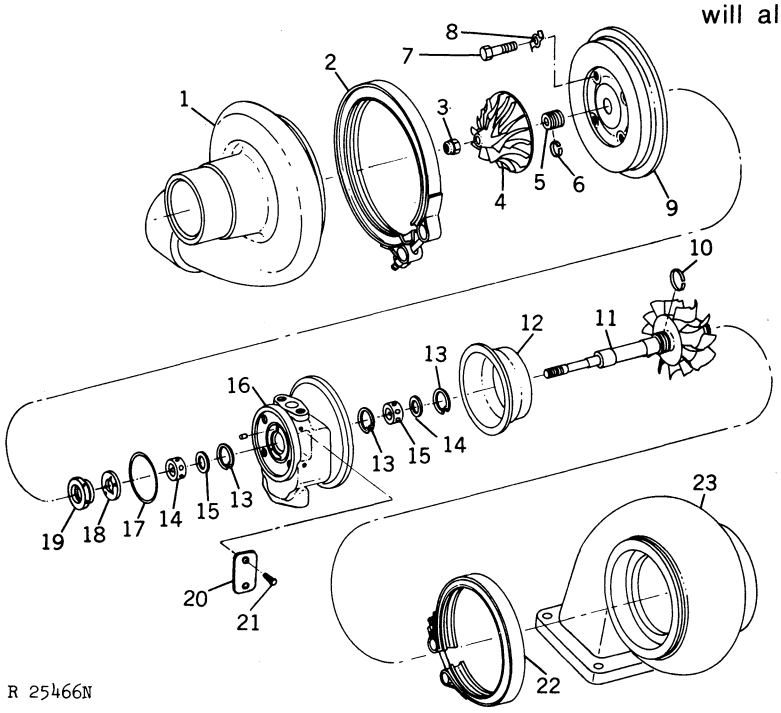

1—Compressor Housing
2—Clamp
3—Self-Locking Nut
4—Impeller
5—Thrust Spacer
6—Piston Ring
7—Bolt
8—Lock Plate
9—Back Plate Assembly
10—Piston Ring
11—Turbine Wheel Assembly
12—Wheel Shroud
13—Retaining Ring
14—Washer
15—Bearing
16—Center Housing
17—Seal Ring
18—Thrust Washer
19—Thrust Collar
20—Nameplate
21—Drive Screw
22—Clamp
23—Turbine Housing

Fig. 29-AiResearch TV-6102 Turbocharger

Assembly—Continued

to bottom. A thin tool, such as a dental pick, may be used as an aid in compressing the ring if difficulty is encountered.

Position thrust washer (18) over the retaining pins. Note that the thrust washer can be properly positioned only one way on the pins. The thrust washer must be seated flat against the housing.

Install thrust collar (19) snugly against thrust bearing. Lubricate with clean engine oil.

Install seal ring (17) in groove of center housing (16).

Place piston ring (6) on thrust spacer (5) and insert spacer into backplate (9) bore with piston ring forward.

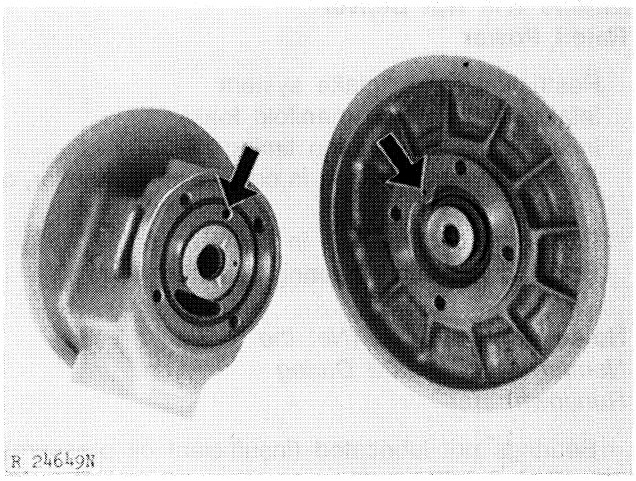

Fig. 30-Oil Feed Holes

Align the oil feed holes (Fig. 30) of the center housing and backplate. With the thrust collar in position on backplate, install backplate assembly, keeping finger pressure on spacer to keep it in place during installation.

Install backplate-to-center housing cap screws and lock plates (7 and 8). Tighten screw to 80-100 in-lbs (9-11 Nm) torque.

Position a 12-point box end wrench (11/16 inch) in a vise (Fig. 14) and insert turbine end of shaft into wrench.

Heat the impeller in a furnace, oven or hot oil bath to 325-360°F for no more than 10 minutes.

⚠ CAUTION: Oil fumes or oil can ignite above 380°F (193°C). Use a thermometer and do not exceed 360°F (182°C). Heat the oil in a well-ventilated area. Plan a safe handling procedure to avoid burns.

Install impeller (4) on shaft, and tighten nut (3) until it bottoms. Using a double universal socket, continue to tighten nut through an angle of 120 degrees to elongate (stretch) shaft 0.009-0.010 in. (0.23-0.25 mm).

Check the clearance between the wheel shroud and turbine wheel. With thrust toward compressor end, the clearance should be 0.025-0.052 in. (0.64-1.32 mm). With the thrust toward the turbine end, the clearance should be 0.034-0.055 in. (0.86-1.40 mm).

Position compressor (1) and turbine (23) housings on center housing, and retain with "V"-band clamps (2 and 22). Leave clamps loose until turbocharger is installed on engine.

If unit is to be stored, lubricate internally and install protective covers on all openings.

Installation

Fill the oil inlet of bearing housing with clean engine oil. Turn the rotating assembly by hand to lubricate bearings and thrust plate.

Use new gasket between turbocharger and manifold. Be sure the old gasket has been removed.

Install turbocharger on engine using new rubber O-rings on coupler (turbocharger-to-intercooler).

Check alignment of compressor housing-to-intake manifold. If necessary, rotate compressor housing so manifold coupling is radially centered in compressor housing and the intake manifold.

Tighten the mounting stud nuts; then tighten the compressor V-band clamp to 110-130 in-lbs (12-15 Nm). Tighten turbine V-band clamp to 160 in-lbs (18 Nm), loosen and retighten to 110-130 in-lbs (12-15 Nm).

When installing turbocharger, exhaust adapter, and exhaust elbow, be certain that the installation does not apply a force on the turbine housing. The exhaust adapter must have 1/16-inch (1.59 mm) minimum end play and rotate freely.

Installation—Continued

Inspect the air cleaner-to-turbocharger hoses to see that they are in good condition. If they are not, replace with new ones. Install air intake hose and tighten hose clamps securely.

IMPORTANT: Since the greatest amount of suction occurs between the air cleaner and turbocharger, it is essential that the hose connections are tight to prevent entry of dirt into the engine.

Connect the lubricating oil inlet manifold and return pipe to the turbocharger, using new gaskets.

Install hood, muffler, air stack, and grille screens.

When starting engine with a new or repaired turbocharger, hold the engine shut-off knob out and crank the engine with the starter until the engine oil pressure gauge registers sufficient pressure. Run engine at low idle, and check oil inlet connection for leaks.

SCHWITZER TURBOCHARGERS

General Information

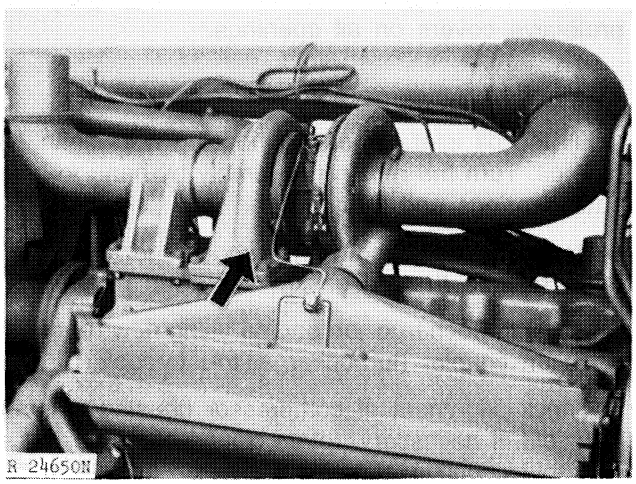

Fig. 31-Schwitzer Model 4LE-302 Turbocharger

Schwitzer turbochargers feature a radial inward-flow turbine, centrifugal impeller, center housing assembly, turbine housing, and compressor housing. Fig. 31 illustrates the Model 4LE-302 turbocharger used on 8630 tractors.

Engine oil under pressure from the engine lubrication system is pumped through passages in the center housing and directed to the bearing. Oil is sealed from the compressor and turbine housings.

The turbocharger contains floating bearing(s) that have clearance between the bearing O.D. and the housing wall as well as a clearance between the bearing I.D. and the shaft O.D. These clearances are lubricated by the oil supply and the bearings are protected by a cushion of oil. Discharge oil drains by gravity from the center housing to the engine crankcase.

FOS

Refer to Chapter 6 of FOS Manual 30—ENGINES.

Diagnosing Malfunctions

Before replacing the turbocharger, determine what caused the failure of the defective unit, and correct the condition. This will prevent an immediate repeat failure of the replacement unit.

Engine Will Not Deliver Rated Power

Restriction in air intake system
Intake and exhaust manifold leaks
Incorrect injection pump timing
Foreign material lodged in compressor, impeller, or turbine
Excessive dirt build-up in compressor
Rotating assembly bearing seizure

Noise or Vibrations *(Not the Normal Whine Heard During Rundown)*

Bearings not lubricated (insufficient oil pressure)
Leak in engine intake or exhaust manifold
Improper clearance between turbine wheel and turbine housing

Oil in Manifolds or Dripping from Housing

Damaged or worn journal bearings
(a) Unbalance of rotating assembly
Damage to turbine or compressor wheel or blade. Dirt or carbon build-up on wheel or wheels
(b) Bearing wear
Oil starvation or insufficient lubrication
Shaft seals worn

Oil on Compressor Wheel or in Compressor Housing (Oil From Center Housing)

Excessive back-pressure (blocked exhaust)
Air intake restriction

Drag in Turbine Wheel

Carbon build-up behind turbine wheel caused by coked oil or combustion deposits. May also be caused by restricted engine vent pipe or restricted turbocharger drain pipe
Dirt build-up behind compressor wheel caused by air intake leaks.
Bearing seizure or dirty or worn bearings caused by excessive temperatures, unbalanced wheel, dirty oil, oil starvation, or insufficient lubrication

Model 3LM-299 (8430 Tractor)

Removal

Remove the air stack, muffler, side grille screens, and hood. Clean exterior of turbocharger to prevent entry of dirt during removal.

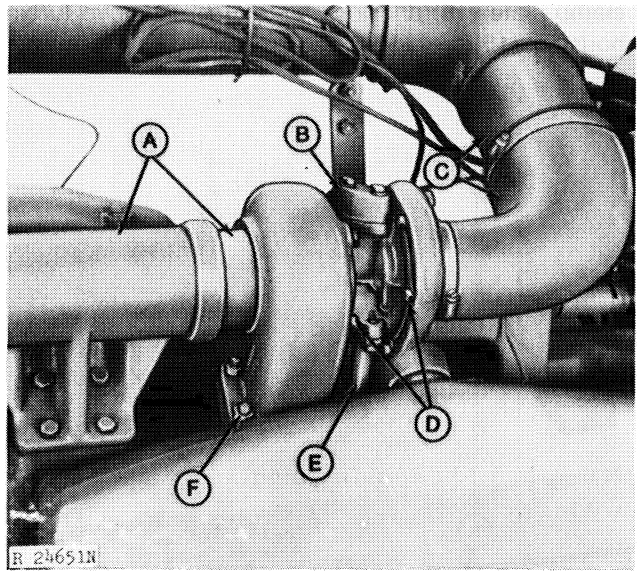

A—Exhaust Elbow and Adapter
B—Inlet Manifold
C—Hose and Pipe
D—Cap Screws
E—Return Pipe
F—Mounting Stud Nuts

Fig. 32-Turbocharger Removal Procedures

Remove the exhaust elbow and adapter (A, Fig. 32).

Disconnect and remove the air intake hose and pipe (C) at the turbocharger end.

Disconnect the oil inlet manifold (B) and the oil return pipe (E).

Loosen the clamp plate cap screws (D) to aid in removing turbocharger from engine. Remove the mounting stud nuts (F).

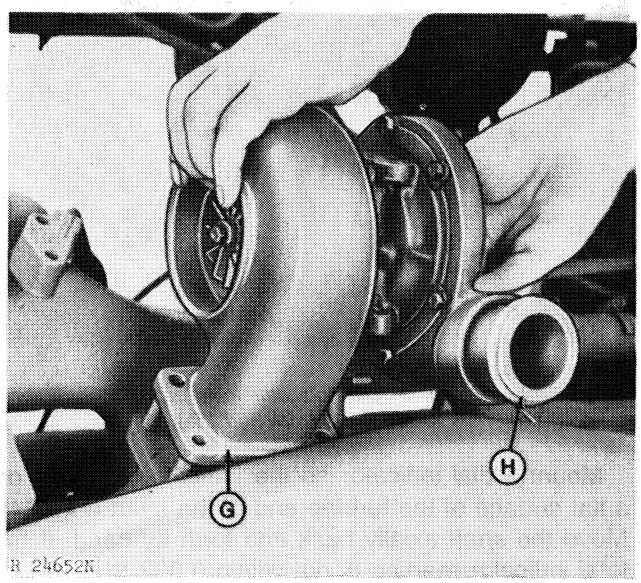

G—Turbine Housing **H—Coupling**

Fig. 33-Removing Model 3LM-299 Turbocharger

Lift the turbine housing (G, Fig. 33) from studs and disengage coupling (H) from intercooler cover. Remove coupling from turbocharger.

Model 3LM-299 (8430 Tractor)—Continued

Tests

Axial End Play Bearing Test

Perform this test to determine the thrust bearing wear.

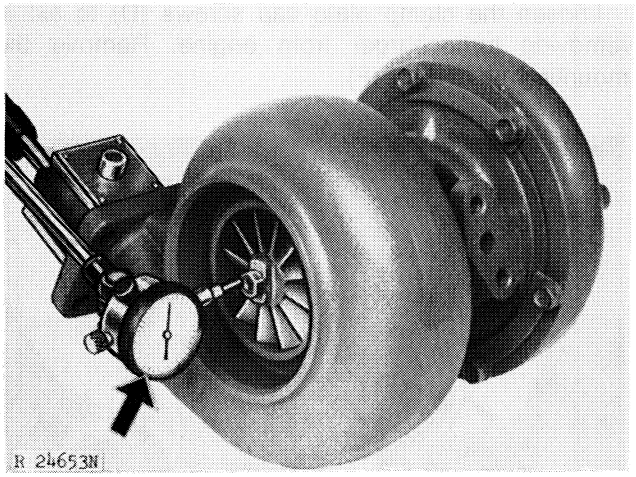

Fig. 34-Dial Indicator Installed To Measure Axial End Play

Mount a dial indicator so the indicator tip rests on a flat surface of the turbine end of the shaft (Fig. 34). Move the shaft axially back and forth by hand. If the total indicator reading is not within 0.002 to 0.005 in. (0.05-0.13 mm), the rotating assembly must be repaired or replaced.

Radial Bearing Test

Perform this test to determine condition of bearing, center housing, or rotating assembly.

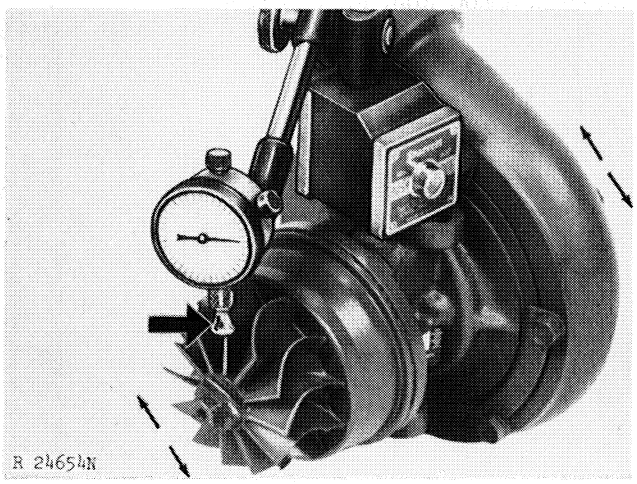

Fig. 35-Dial Indicator Installed To Measure Radial Movement

To check radial bearing clearance, a wire type feeler gauge may be used to measure the distance between the housing and the outboard tip of the compressor and the turbine blade. First with the blade pushed toward the housing, then with the blade pushed away from the housing (move other end of shaft in the opposite direction). Maximum radial movement is 0.021 in. (0.53 mm). If wire gauge is not available, use a dial indicator (Fig. 35).

Repair

Disassembly

Refer to Fig. 37 for identification and relationship of parts.

Place locating marks on compressor cover (1, Fig. 37), and bearing housing (14) and on turbine housing (15).

Remove the special cap screws (3) and clamp plates (2) from the compressor cover, and remove cover. Keep these screws with the cover.

Loosen and remove the cap screws (20) from clamp plate (18) and lock plate (19). Remove turbine housing (15).

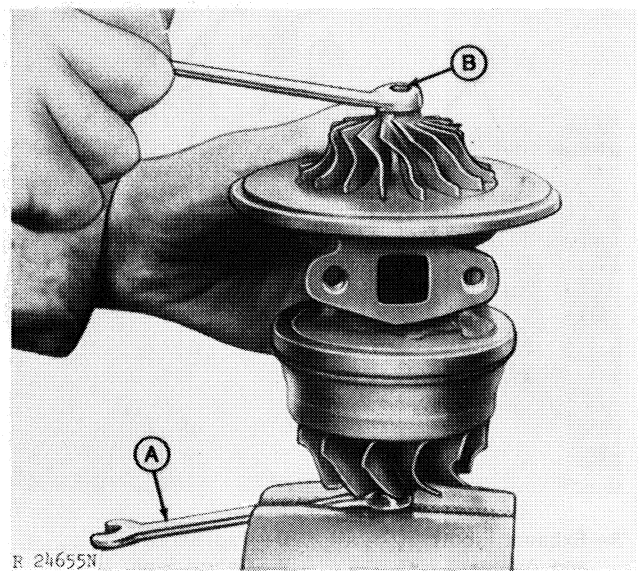

A—Box End Wrench **B—Lock Nut**

Fig. 36-Removing Lock Nut

Clamp a 5/8-inch, 12-point box end wrench (A, Fig. 36) in a vise. Place the 12-point hub of the turbine wheel in the box end wrench. Hold the bearing housing with one hand and loosen the compressor lock nut (B).

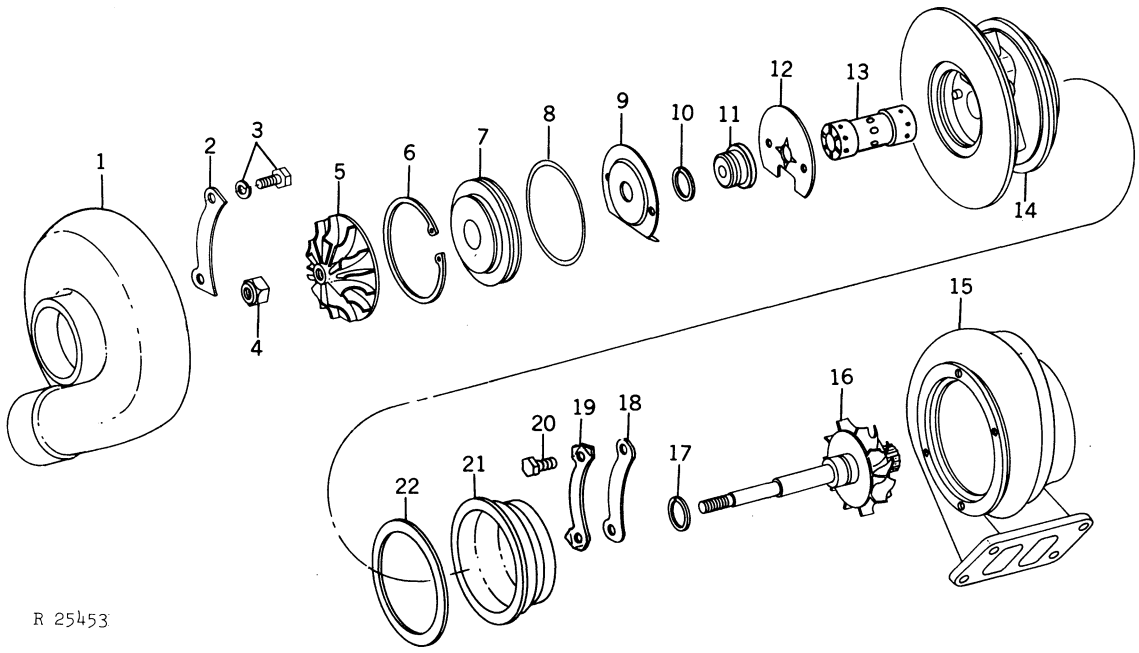

1—Compressor Cover
2—Clamp Plate (4 used)
3—Screw with Lock Washer (8 used)
4—Lock Nut
5—Compressor Wheel
6—Snap Ring
7—Insert
8—O-Ring
9—Oil Deflector
10—Piston Ring
11—Oil Deflector Sleeve
12—Thrust Plate
13—Bearing
14—Bearing Housing
15—Turbine Housing
16—Turbine Wheel with Shaft
17—Piston Ring (copper plated)
18—Clamp Plate
19—Lock Plate
20—Cap Screw
21—Back Plate
22—Gasket

Fig. 37-Schwitzer Turbocharger

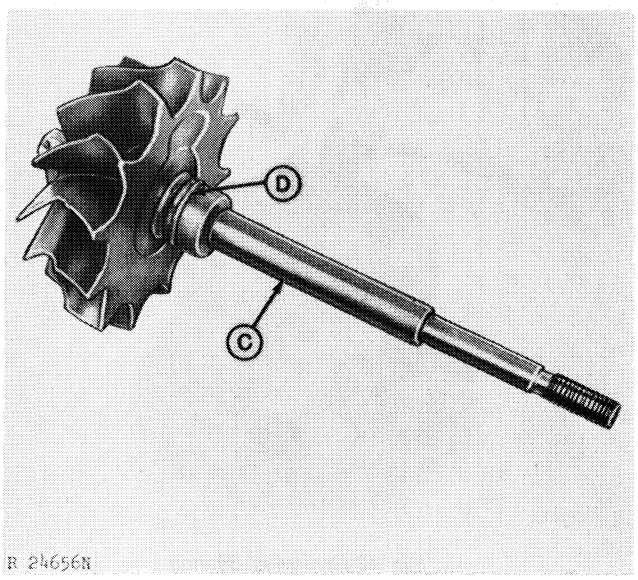

C—Shaft Assembly **D—Piston Ring**

Fig. 38-Turbine Shaft Piston Ring

Remove the lock nut, and withdraw the turbine wheel and shaft assembly (C, Fig. 38) from the bearing housing. Remove the piston ring (D) from the shaft, and discard piston ring.

Lay bearing housing assembly on a clean flat surface with compressor side up (Fig. 39). Use Truarc No. 0500 pliers to remove large snap ring (E) which retains compressor insert (F).

⚠ CAUTION: Place hand over snap ring while it is being compressed to prevent personal injury or loss of snap ring.

Use two screw drivers to gently lift the insert (F, Fig. 40) from the bearing housing. Remove O-ring (G) from insert. The oil deflector (H) with oil deflector sleeve (I), and thrust plate (J) can now be lifted out of bearing housing (K). Remove the piston ring from the oil deflector sleeve.

Disassembly—Continued

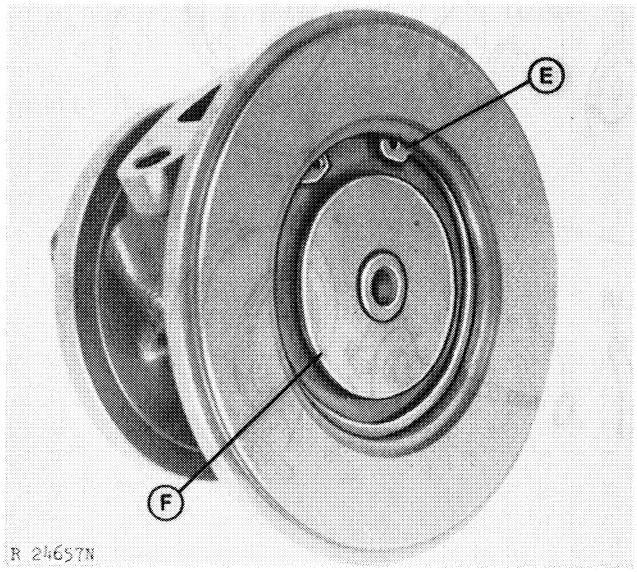

E—Snap Ring **F—Insert**

Fig. 39-Insert Removal

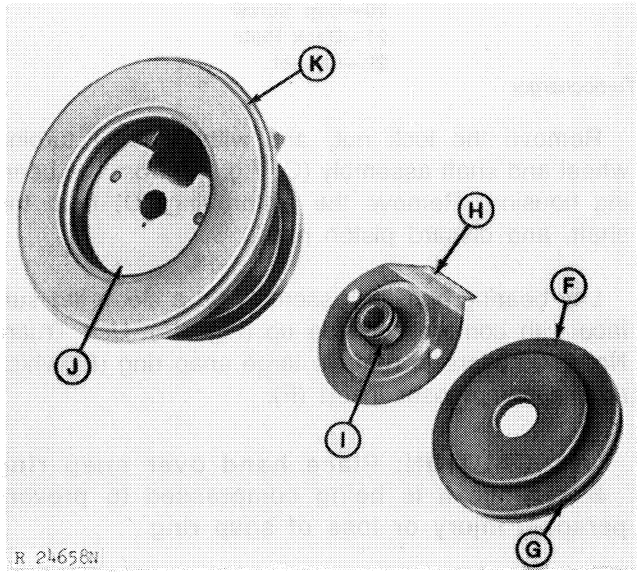

F—Insert
G—O-Ring
H—Oil Deflector
I —Oil Deflector Sleeve
J—Thrust Plate
K—Bearing Housing

Fig. 40-Parts Removed From Compressor End of Bearing Housing

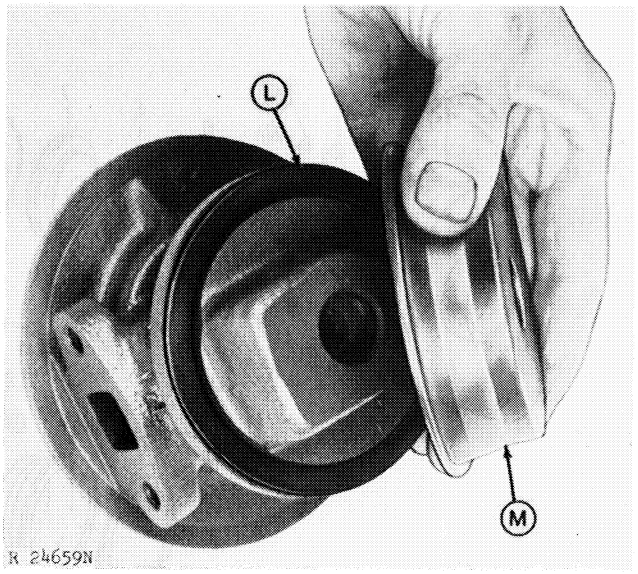

L—Gasket **M—Backplate**

Fig. 41-Backplate-To-Bearing Housing Gasket

Remove the gasket (L, Fig. 41) from between backplate (M) and bearing housing (K, Fig. 40).

Withdraw bearing (Fig. 42) from bearing housing.

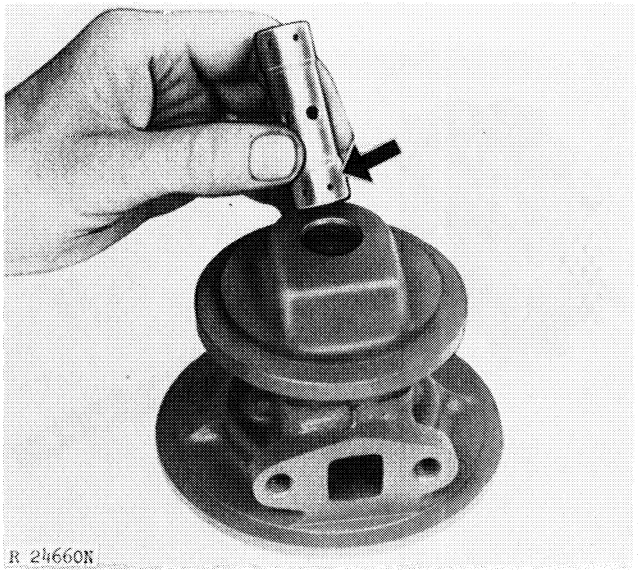

Fig. 42-Removing Bearing

Cleaning

Use a commercially approved cleaner only. A caustic solution will damage certain parts and should not be used. Soak parts in cleaner until all deposits have been loosened.

Use plastic scraper or bristle-type brush on aluminum parts. Glass bead dry blast may also be used, but be sure air pressure does not exceed 40 psi (2.8 bar).

Clean all drilled passages with compressed air jet.

Make certain surfaces adjacent to wheels on stationary housings are free of deposits and are clean and smooth.

Inspection and Repair

Shaft and Turbine Wheel Assembly

Inspect bearing journals for excessive scratches and wear. Minor scratches may be tolerated.

Inspect piston ring groove wall for scoring. Minor scratches are acceptable.

Replace the wheel if blades are cracked, bent, or damaged.

IMPORTANT: Do not attempt to straighten blades.

Bearing

Small scratches and light polished areas do not impair operation of the bearing. If the O.D. and I.D. areas are heavily scratched or grooved, the bearing should be replaced.

Bearing Housing

Replace bearing housing if bearing or piston ring bores are excessively scratched or worn.

Oil Deflector Sleeve and Thrust Ring

Replace if piston ring groove or deflector is damaged. Replace if thrust faces are damaged. Minor scratches are acceptable.

Thrust Plate

Replace thrust plate if faces are worn excessively, unevenly, or are severely scratched and otherwise damaged.

Compressor Wheel

Replace the wheel if blades are rubbed, damaged, or bent.

IMPORTANT: Do not attempt to straighten blades.

O-Ring

Replace the O-ring. Do not attempt to reuse.

Assembly

Install copper-plated piston ring in groove on turbine wheel and shaft assembly (Fig. 38). Be careful not to over-expand the ring.

Lubricate I.D. and O.D. of bearing and install bearing into bearing housing bore (Fig. 42).

Position back plate (Fig. 41) with a new gasket on bearing housing.

Lubricate piston ring and install turbine wheel with shaft in bearing housing. Use care when seating piston ring to prevent damage to piston ring and bore.

Lubricate thrust faces on each side of thrust plate (Fig. 40) and install thrust plate, with bronze face up, on shaft. Align holes with dowels in bearing housing.

Place oil deflector sleeve (Fig. 40) onto shaft. Install oil deflector on thrust plate, aligning holes with dowels. Install piston ring in groove of deflector sleeve. Position new O-ring in groove of compressor insert. Lubricate piston ring and O-ring lightly. Slip compressor insert on turbine shaft and press gently into bearing housing counterbore until it compresses the piston ring and clears the retaining ring groove. Careless installation could break the piston ring.

Use Truarc No. 0500 pliers to install snap ring in bearing housing groove with beveled side facing outward. Be sure snap ring is completely engaged in the groove. To assure complete seating of snap ring in groove, use flat end punch and light hammer to gently tap free ends of ring.

Slip the compressor wheel over the shaft until it bottoms against oil deflector sleeve.

Hole the turbine wheel and shaft assembly with a 5/8-inch, 12-point wrench (Fig. 36).

Assembly—Continued

Coat the threads and back face of lock nut with graphite grease, and install on shaft. Tighten lock nut to 156 in-lbs (18.0 Nm) torque.

NOTE: Spin rotor wheels. The rotating assembly must spin freely with no rubbing or binding. If it does not spin freely, disassemble and repeat the assembly procedure. Check the bearing end play and radial clearance. See page 10-20.

Install turbine housing on bearing housing, and retain with lock plates and cap screws. Leave screws loose until turbocharger has been installed on engine.

Apply graphite grease lightly around the machined flange of the compressor cover. This will facilitate positioning of the cover when the turbocharger is completely assembled.

Install compressor housing on bearing housing, and retain with lock plates and cap screws. Leave screws loose until turbocharger has been mounted.

Installation

Fill the oil inlet of bearing housing with clean engine oil. Turn the rotating assembly by hand to lubricate bearings and thrust plate.

Use new gasket between turbocharger and manifold. Be sure the old gasket has been removed.

Install turbocharger on engine, using new rubber O-rings on coupler (turbocharger-to-intercooler).

Check alignment of compressor housing-to-intake manifold. If necessary, rotate compressor housing so manifold coupling is radially centered in compressor housing and the intake manifold.

Tighten the mounting stud nuts, then tighten the lock plate screws to 60 in-lbs (6.8 Nm) torque.

When installing turbocharger exhaust adapter and exhaust elbow be certain that the installation does not apply a force on the turbine housing. The exhaust adapter must have 1/16-inch (1.59 mm) minimum end play and rotate freely.

Inspect the air cleaner-to-turbocharger hoses to see that they are in good condition. If they are not, replace with new ones. Install air intake hose and tighten hose clamps securely.

IMPORTANT: Since the greatest amount of suction occurs between the air cleaner and turbocharger, it is essential that the hose connections are tight to prevent entry of dirt into the engine.

Connect the lubricating oil inlet manifold and return pipe to the turbocharger, using new gaskets.

Install hood, muffler and air stack.

When starting engine with a new or repaired turbocharger, hold the engine shut-off knob out and crank the engine with the starter until the engine oil pressure gauge registers sufficient pressure. Run engine at low idle, and check oil inlet connection for leaks.

Model 4LE-302 (8630 Tractor)

Removal

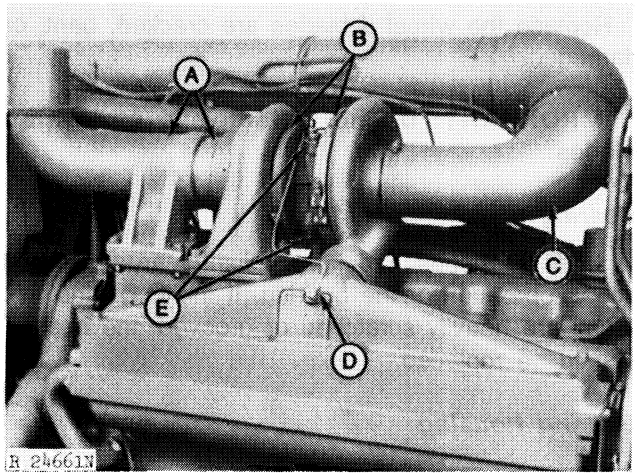

A—Exhaust Elbow and Adapter
B—"V"-Band Clamps
C—Hose
D—Ether Starting Aid Pipe
E—Inlet Manifold and Return Pipe

Fig. 43-Turbocharger Removal Procedures

Remove the air stack, muffler, side grille screens, and hood. Clean exterior of turbocharger to prevent entry of dirt during removal.

Remove the exhaust elbow and adapter (A, Fig. 43).

Disconnect and remove the intake hose (C, Fig. 43 at turbocharger), lubricating oil inlet manifold and lubricating oil return pipe (E) from turbocharger. Remove ether starting aid pipe (D).

Loosen both "V"-band clamps (B), and remove the mounting stud nuts. Lift turbine housing from studs. Then remove turbocharger and coupling (Fig. 44).

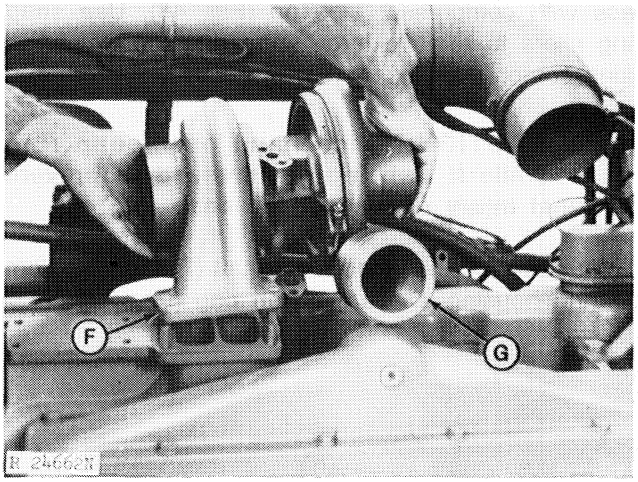

F—Turbine Housing **G—Coupling**

Fig. 44-Removing Model 4LE-302 Turbocharger

Tests

Axial End Play Bearing Test

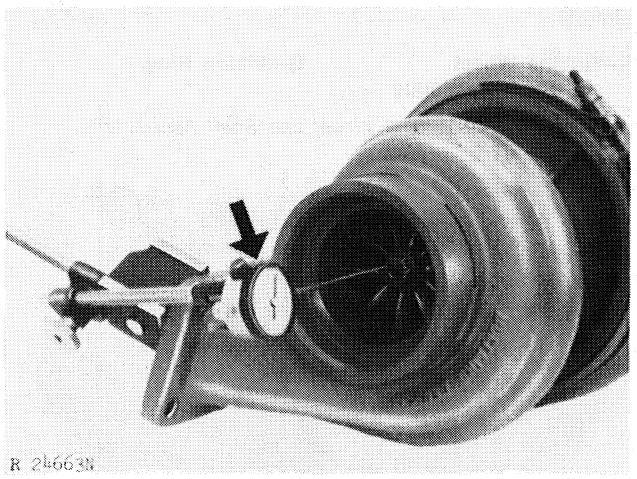

Fig. 45-Dial Indicator Installed To Measure Axial End Play

Perform this test to determine the thrust bearing wear.

Mount a dial indicator so the indicator tip rests on a flat surface of the turbine end of the shaft (Fig. 45). Move the shaft axially back and forth by hand. If the total indicator reading is not within 0.003 to 0.006 in. (0.08-0.15 mm), the rotating assembly must be repaired or replaced.

Radial Bearing Test

Perform this test to determine condition of bearing, center housing, or rotating assembly.

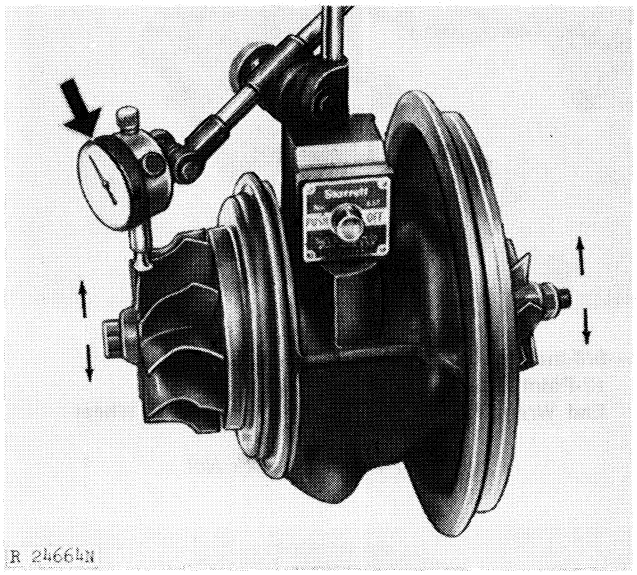

Fig. 46-Dial Indicator Installed To Measure Radial Movement

To check radial bearing clearance, a wire type feeler gauge may be used to measure the distance between the housing and the outboard tip of the compressor and the turbine blade. First with the blade pushed toward the housing, then with the blade pushed away from the housing (move other end of shaft in the opposite direction). Maximum radial movement is 0.035 in. (0.89 mm). If wire gauge is not available, remove the compressor and turbine housings and use a dial indicator (Fig. 46).

Repair

Disassembly

Remove turbine housing and compressor cover from bearing housing.

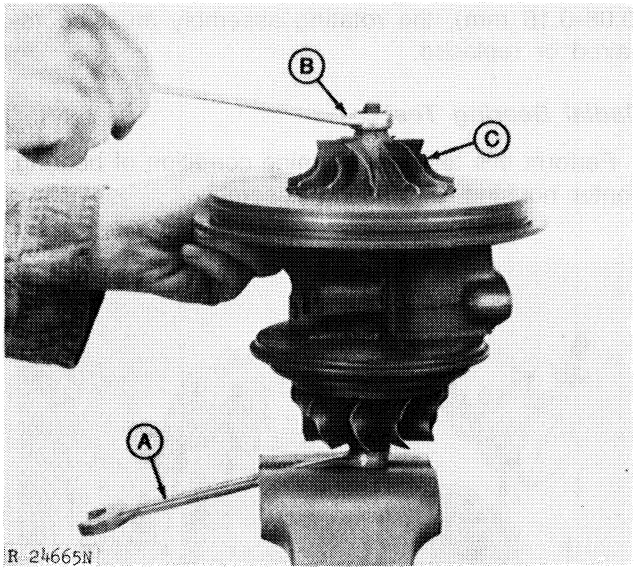

A—5/8-Inch 12-Point Box End Wrench
B—5/8-Inch Box End Wrench
C—Compressor Wheel

Fig. 47-Removing Lock Nut

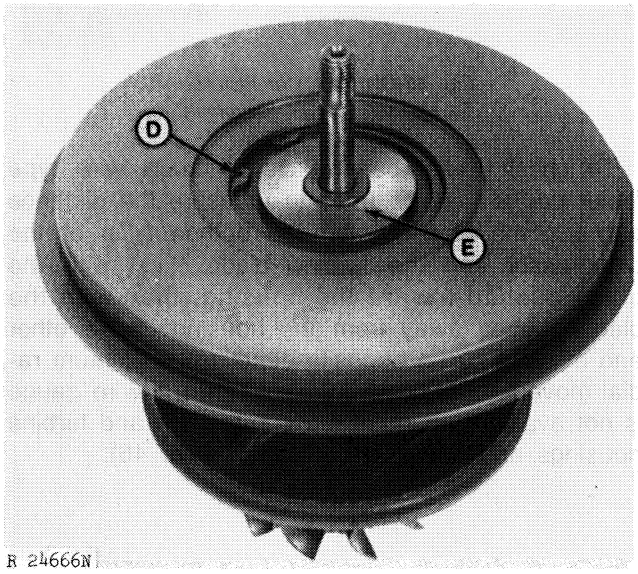

D—Snap Ring
E—Insert

Fig. 48-Removing Compressor Insert

Clamp a 5/8-inch, 12-point box end wrench (A, Fig. 47) in a vise. Place the 12-point hub of the turbine wheel in the box end wrench. Hold the bearing housing with one hand and loosen the compressor lock nut with a 5/8-inch box end wrench (B). Remove lock nut and slide compressor wheel (C) from turbine shaft.

Lay bearing housing assembly on a clean flat surface with compressor side up (Fig. 48). Use snap ring pliers to remove large snap ring (D) which retains compressor insert (E).

⚠ CAUTION: Place hand over snap ring while it is being compressed to prevent personal injury or loss of the snap ring.

Withdraw turbine wheel and shaft (F, Fig. 49) from bearing housing. Discard piston ring (G).

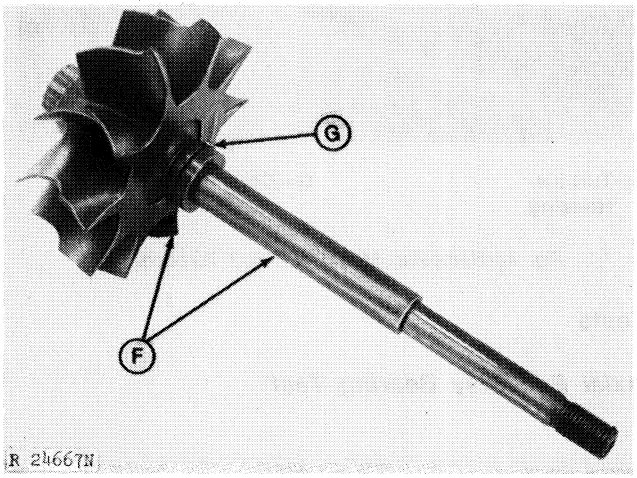

F—Turbine Wheel and Shaft Assembly
G—Piston Ring

Fig. 49-Turbine Wheel and Shaft Assembly

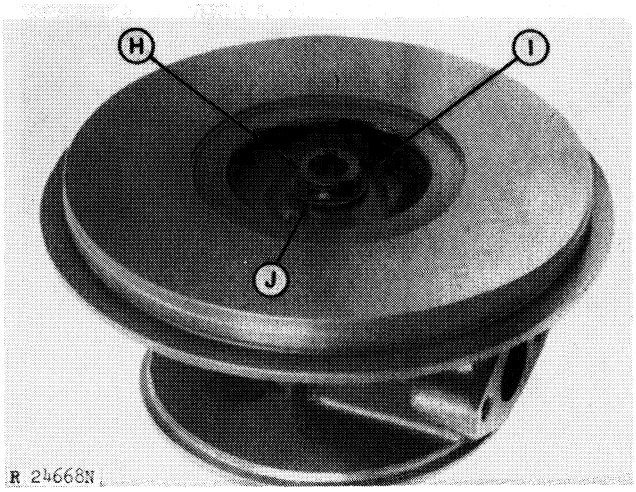

H—Deflector Sleeve
I —Piston Rings
J—Thrust Ring

Fig. 50-Oil Deflector Sleeve Piston Rings

Remove deflector sleeve (H, Fig. 50), and discard piston rings (I) from sleeve. Remove thrust ring (J).

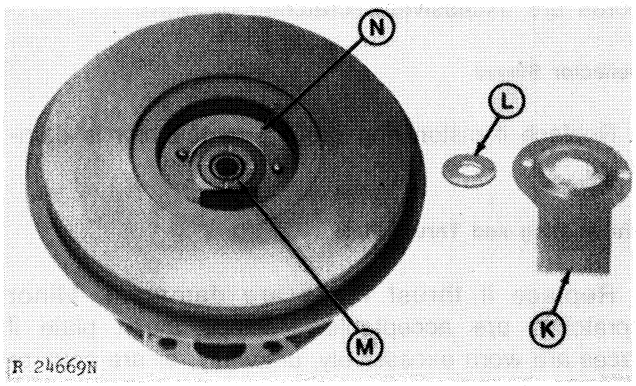

K—Oil Deflector
L—Thrust Ring
M—Spacer
N—Thrust Plate

Fig. 51-Removing Thrust Plate

Lift out oil deflector (K, Fig. 51), thrust ring (L), and spacer (M). Remove thrust plate (N).

Remove snap ring (0, Fig. 52) and bearing (Q), from compressor end of bearing housing. Do not remove spring pins (P).

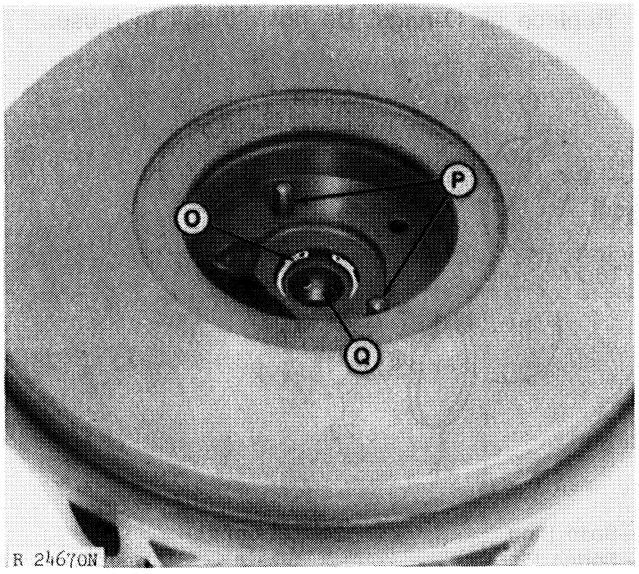

O—Snap Ring
P—Spring Pins
Q—Bearing

Fig. 52-Removing Bearing and Snap Ring

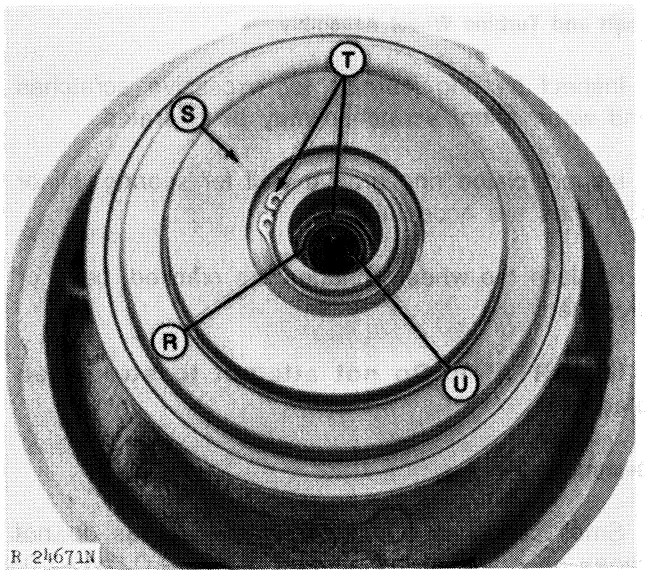

R—Oil Control Sleeve
S—Backplate
T—Snap Rings
U—Bearing

Fig. 53-Backplate Removal Procedures

Remove snap ring (T, Fig. 53) and oil control sleeve (R) from turbine end of bearing housing, then remove bearing (U). Remove snap ring (T) retaining backplate (S) to bearing housing, and remove backplate.

Cleaning

Use a commercially approved cleaner only. A caustic solution will damage certain parts and should not be used. Soak parts in cleaner until all deposits have been loosened.

Use a plastic scraper or bristle-type brush on aluminum parts. Glass bead dry blast may also be used, but be sure air pressure does not exceed 40 psi (2.8 bar).

Clean all drilled passages with compressed air jet.

Make certain surfaces adjacent to wheels on stationary housings are free of deposits and are clean and smooth.

Inspection and Repair

Shaft and Turbine Wheel Assembly

Inspect bearing journals for excessive scratches and wear. Minor scratches may be tolerated.

Inspect piston ring groove wall for scoring. Minor scratches are acceptable.

Replace the wheel if blades are cracked, bent, or damaged.

IMPORTANT: Do not attempt to straighten blades.

Bearing

Small scratches and light polished areas do not impair operation of the bearing. If the O.D. and I.D. areas are heavily scratched, grooved, or have the tin plating worn off the bearing should be replaced.

Bearing Housing

Replace bearing housing if bearing or piston ring bores are excessively scratched or worn.

Deflector Sleeve

Replace if piston ring groove or deflector is damaged.

Thrust Ring and Thrust Plate

Replace if thrust faces are damaged. Minor scratches are acceptable. Replace thrust plate if faces are worn excessively, unevenly, or are severely scratched and otherwise damaged. The small drilled oil hole must be clean and not restricted.

Compressor Wheel

Replace the wheel if blades are rubbed, damaged, or bent.

IMPORTANT: Do not attempt to straighten blades.

O-Rings

Replace all O-rings. Do not attempt to reuse.

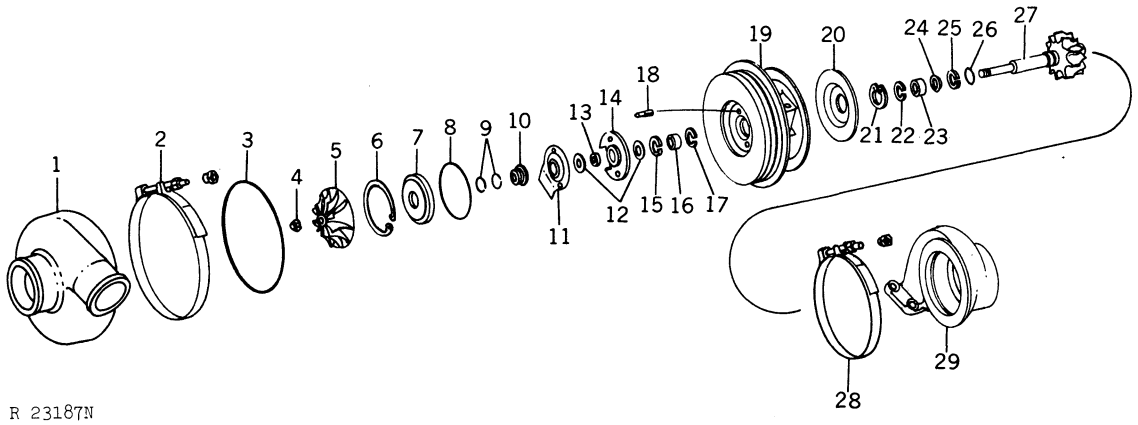

1—Compressor Cover
2—Clamp Band
3—O-Ring
4—Lock Nut
5—Compressor Wheel
6—Snap Ring
7—Insert
8—O-Ring
9—Piston Rings
10—Deflector Sleeve
11—Oil Deflector
12—Thrust Ring
13—Spacer
14—Thrust Plate
15—Snap Ring
16—Bearing
17—Snap Ring
18—Spring Pin
19—Bearing Housing
20—Backplate
21—Snap Ring
22—Snap Ring
23—Bearing
24—Oil Control Sleeve
25—Snap Ring
26—Piston Ring
27—Turbine Wheel and Shaft Assembly
28—Clamp Band
29—Turbine Housing

Fig. 54-Schwitzer 4LE-302 Turbocharger

Assembly

Install bearings, oil control sleeve, and retaining rings in bearing housing. Rounded side of retaining ring must face toward the bearing. Lubricate bearings.

Position back plate on turbine end of bearing housing, and secure with snap ring (flat side against back plate).

Install piston ring in groove on turbine wheel and shaft assembly. Be careful not to over-expand the ring.

Lubricate piston ring and install turbine wheel with shaft in bearing housing. Use care when seating piston ring to prevent damage to piston ring and bore.

Slip thrust plate over shaft, and position on pins (Fig. 52). Install spacer.

Install lower thrust ring, oil deflector, and upper thrust ring.

Install new piston rings on deflector sleeve, positioning rings so that the ring gaps are opposite each other. Lubricate rings and sleeve.

Install deflector sleeve into compressor insert (Fig. 50). Note that the bottom side of insert has a chamfered edge which enables the piston rings to compress as the sleeve enters the insert. Using a slight back and forth motion while pressing parts together will aid installation. Exercise care to avoid breaking the rings.

Position a new O-ring in groove of compressor insert. Lubricate O-ring lightly. Slip insert on turbine shaft and press gently into bearing housing counterbore until it clears the snap ring groove.

Install snap ring in bearing housing groove with beveled side facing outward. Be sure snap ring is completely engaged in the groove. To assure complete seating of snap ring, use flat-end of punch and a light hammer to gently tap free ends of ring.

Slip the compressor wheel over the shaft until it bottoms against deflector sleeve.

Hold the turbine wheel and shaft assembly with a 5/8-inch, 12-point wrench (Fig. 47).

Coat the threads and back face of lock nut with graphite grease and install on shaft. Tighten lock nut to 15 ft-lbs (20 Nm) torque.

NOTE: The rotor wheel must spin freely with no rubbing or binding. If it does not spin freely, disassemble and repeat the assembly procedure.

Place clamp band (28, Fig. 54) over flange on turbine housing. Install bearing housing assembly in turbine housing. Install clamp band over flange of both turbine housing and bearing housing. Coat threads of clamp band and back face of lock nut with graphite grease. Install a lock nut on clamp band and leave nut loose until turbocharger has been mounted.

Apply graphite grease lightly around the machined flange of the compressor cover. This will facilitate positioning of the cover when the turbocharger is completely assembled.

Install clamp band on bearing housing, and position compressor cover. Leave clamp loose until turbocharger has been mounted.

Installation

Fill the oil inlet of bearing housing with clean engine oil. Turn the rotating assembly by hand to lubricate bearings and thrust plate.

Use new gasket between turbocharger and manifold. Be sure the old gasket has been removed.

Install turbocharger on engine, using new rubber O-rings on coupler (turbocharger-to-intercooler).

Check alignment of compressor housing-to-intake manifold. If necessary, rotate compressor housing so manifold coupling is radially centered in compressor housing and the intake manifold.

Tighten the mounting stud nuts, then tighten the clamp band nuts to 10 ft-lbs (14 Nm) torque.

When installing turbocharger exhaust adapter and exhaust elbow be certain that the installation does not apply a force on the turbine housing. The exhaust adapter must have 1/16-inch (1.59 mm) minimum end play and rotate freely.

Inspect the air cleaner-to-turbocharger hoses to see that they are in good condition. If they are not, replace with new ones. Install air intake hose and tighten hose clamps securely.

IMPORTANT: Since the greatest amount of suction occurs between the air cleaner and turbocharger, it is essential that the hose connections are tight to prevent entry of dirt into the engine.

Litho in U.S.A.

Installation—Continued

Connect the lubricating oil inlet manifold and return pipe to the turbocharger, using new gaskets.

Install hood, muffler, and air stack.

When starting engine with a new or repaired turbocharger, hold the engine shut-off knob out and crank the engine with the starter until the engine oil pressure gauge registers sufficient pressure. Run engine at low idle, and check oil inlet connection for leaks.

INTERCOOLERS

General Information

The intercooler cools the intake air that has been heated by the operation of the turbocharger before entering the intake manifold. This cooling is done by coolant from the engine circulating through the intercooler core.

6466A Intercooler (8430 Tractor)

Removal

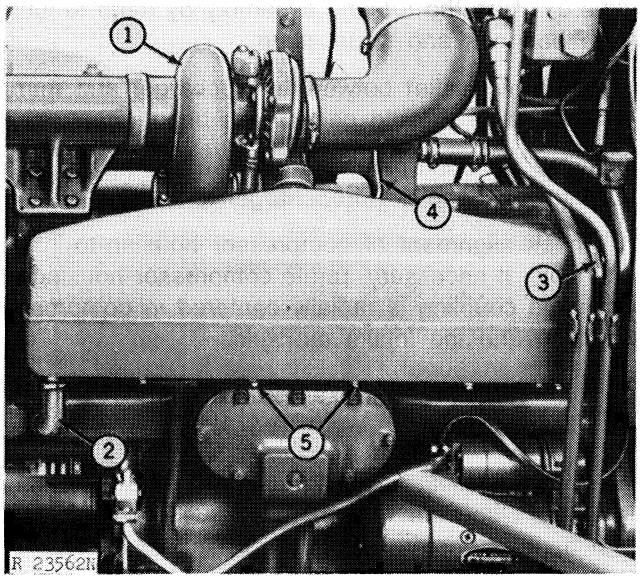

Fig. 55-Intercooler Removal Steps

Drain the cooling system, and remove the air stack, muffler, and hood.

Referring to Fig. 55:

1. Remove the turbocharger (page 10-7 or 10-19).

2. Disconnect inlet hose, and remove adapter plate.

3. Disconnect outlet hose, and remove rear adapter plate.

4. Disconnect and remove ether starting aid pipe.

5. Remove cover cap screws and lift-off core and cover as a unit (Fig. 56).

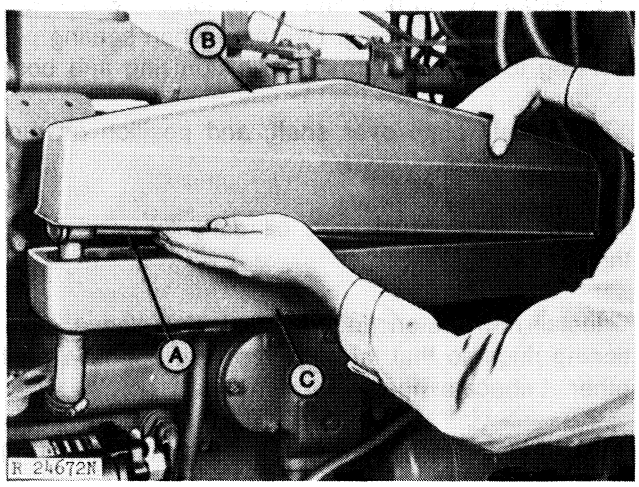

A—Intercooler **C—Intake Manifold**
B—Cover

Fig. 56-Removing Intercooler and Cover

Repair

Check the aluminum core for leaks. This is done by plugging or capping one end of the core, and applying compressed air from the other end while the core is submerged under water.

A minor leak that is accessable may be repaired. However, if the condition of the core is questionable, replace with a new one. Coolant leaking from the intercooler core may cause severe damage to the engine.

Installation

Before installing the intercooler, wipe the inside of intake manifold (Fig. 56) with a clean cloth. Inspect the manifold for cracks or other irregularities, and replace if its condition is questionable.

The intake manifold-to-engine cylinder head gaskets must be in good condition and cap screws must be tight. Tighten cap screws to 35 ft-lbs (47 Nm) torque.

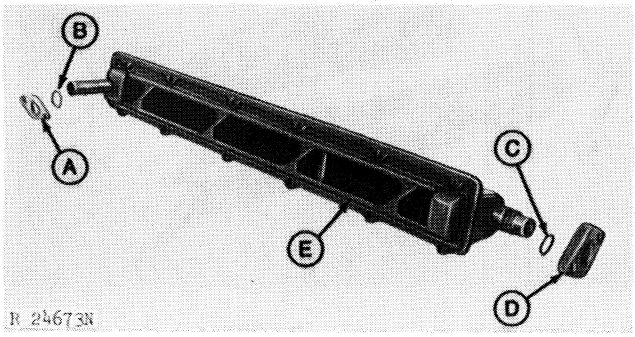

A—Adapter Plate
B—O-Ring
C—O-Ring
D—Adapter Plate
E—Intercooler Core

Fig. 57-Intercooler Removed from Intake Manifold

Make sure that the exterior surfaces of the intercooler (Fig. 57) are clean and that the fins are straight.

Use new gaskets and O-rings when installing intercooler core. Use Fig. 57 as a guide for assembly of parts. Tighten intercooler cover screws to 35 ft-lbs (47 Nm) torque.

Install turbocharger (pages 10-11 or 10-24).

Fill cooling system and check for leaks.

After completing the installation, check the intake manifold pressure.

6619A Intercooler (8630 Tractor)

Removal

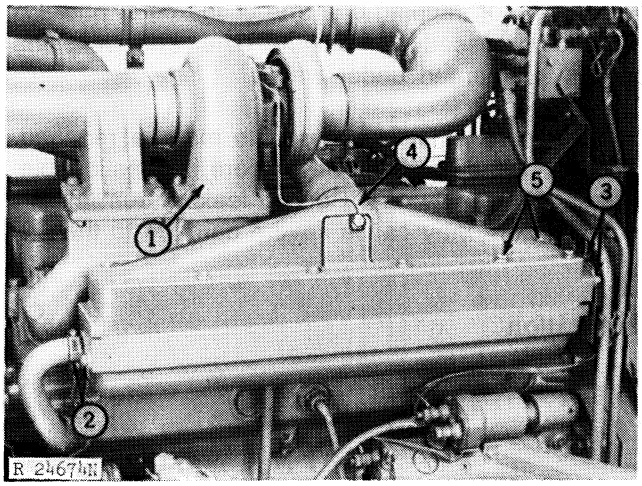

Fig. 58-Intercooler Removal Steps

Drain the cooling system, and remove the air stack, muffler, and hood.

Referring to Fig. 58:

1. Remove the turbocharger (pages 10-12 or 10-24).

2. Disconnect inlet hose, and remove adapter plate.

3. Disconnect outlet hose, and remove rear adapter plate.

4. Disconnect and remove ether starting aid pipe.

5. Remove cover cap screws and lift-off core and cover as a unit (Fig. 59).

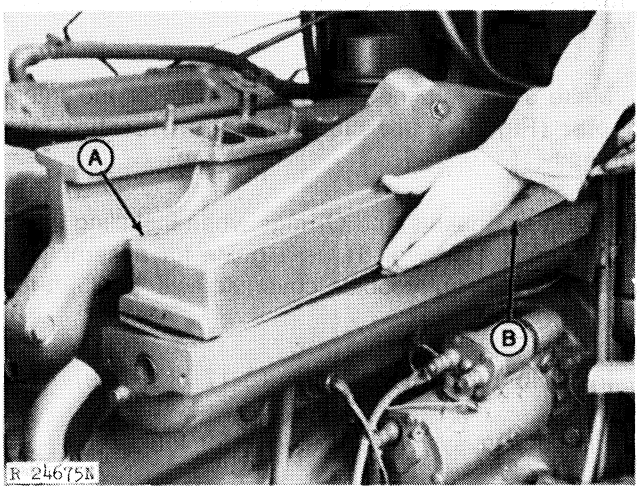

A—Cover
B—Intercooler Core

Fig. 59-Removing Intercooler and Cover

Repair

Check the aluminum core for leaks. This is done by plugging or capping one end of the core, and applying compressed air from the other end while the core is submerged under water.

A minor leak that is accessable may be repaired. However, if the condition of the core is questionable, replace with a new one. Coolant leaking from the intercooler core may cause severe damage to the engine.

Installation

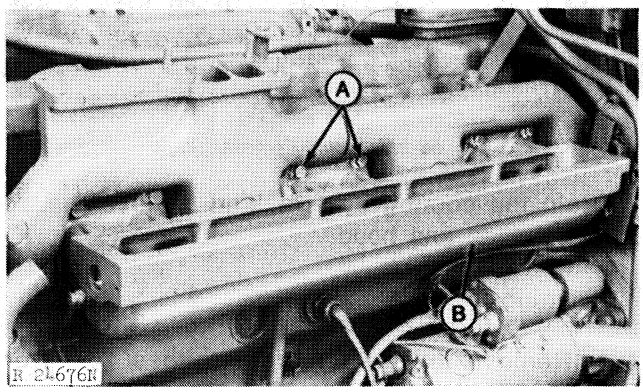

A—Cap Screws **B—Intake Manifold**

Fig. 60-Intake Manifold

Before installing the intercooler, wipe the inside of intake manifold (B, Fig. 60) with a clean cloth. Inspect the manifold for cracks or other irregularities, and replace if its condition is questionable.

The intake manifold-to-engine cylinder head gaskets must be in good condition and cap screws (A) must be tight. Tighten cap screws to 55 ft-lbs (75 Nm) torque.

Make sure that the exterior surfaces of the intercooler (Fig. 61) are clean and that the fins are straight.

Use new gaskets and O-rings when installing intercooler core. Use Fig. 61 as a guide for assembly of parts. Tighten intercooler cover screws to 35 ft-lbs (47 Nm) torque.

Install turbocharger (pages 10-17 or 10-29).

Fill cooling system and check for leaks.

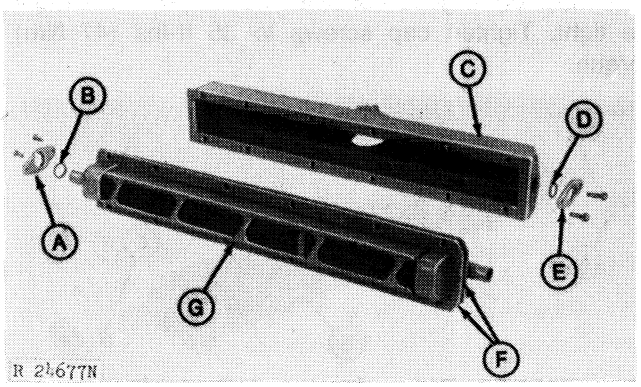

A—Adapter Plate
B—O-Ring
C—Cover
D—O-Ring
E—Adapter Plate
F—Intercooler Core

Fig. 61-Intercooler Removed from Intake Manifold

After completing the installation, check the intake manifold pressure.

INTAKE MANIFOLD PRESSURE TEST

General Information

The intake manifold pressure should be checked periodically to make sure that there is sufficient boost pressure from the turbocharger for maximum engine performance.

This test is usually a regular part of engine tune-up service. It is a good practice to check manifold pressure whenever there has been repair work done on the air intake system or after a major engine overhaul.

Checking Manifold Pressure

To check the intake manifold pressure, connect tractor to a dynamometer.

Disconnect the ether starting aid pipe at intake manifold end. On 8630 Tractors, unscrew nozzle adapter (5, Fig. 63) from manifold cover to disconnect pipe (7). On 8430 Tractors, disconnect pipe (7, Fig. 64) from elbow fitting (4), and unscrew nozzle adapter (5) from manifold cover.

Connect an accurate air pressure gauge (B, Fig. 62) with hose to the manifold cover. Make sure connection is tight to prevent air leakage during test.

Start engine and bring to operating temperature. With engine running at fast idle speed, gradually increase the load on engine with dynamometer until engine is operating at 2100 rpm full load speed.

Litho in U.S.A.

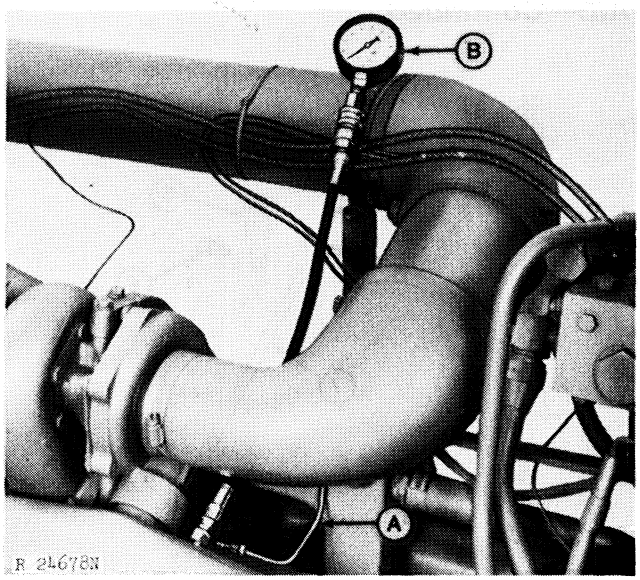

A—Ether Starting Aid Pipe **B—Pressure Gauge**

Fig. 62-Checking Manifold Pressure (8430 Tractor Illustrated)

Observe pressure reading on gauge. The pressure should be 18-23 psi (1.2-1.6 bar) on 8430 Tractors, and 20-24 psi (1.4-1.7 bar) on 8630 Tractors—when the engine is developing rated horsepower at the 2100 rpm full load speed.

If the pressure is low, check the following:

(1) Restriction in the air intake pipe, pre-cleaner, or air cleaner (page 10-1 - 10-3).

(2) Leak in air intake system between turbocharger and cylinder head.

(3) Improper fuel delivery resulting from a malfunctioning fuel system. This may be caused by a restriction in the fuel lines or fuel filter, injection pump incorrectly timed or adjusted, injection nozzles dirty or defective.

(4) Defective turbocharger (page 10-4 or 10-18).

When the manifold pressure is restored to specifications, complete the test by removing the pressure gauge and hose, and installing the ether starting aid pipe.

ETHER STARTING AID

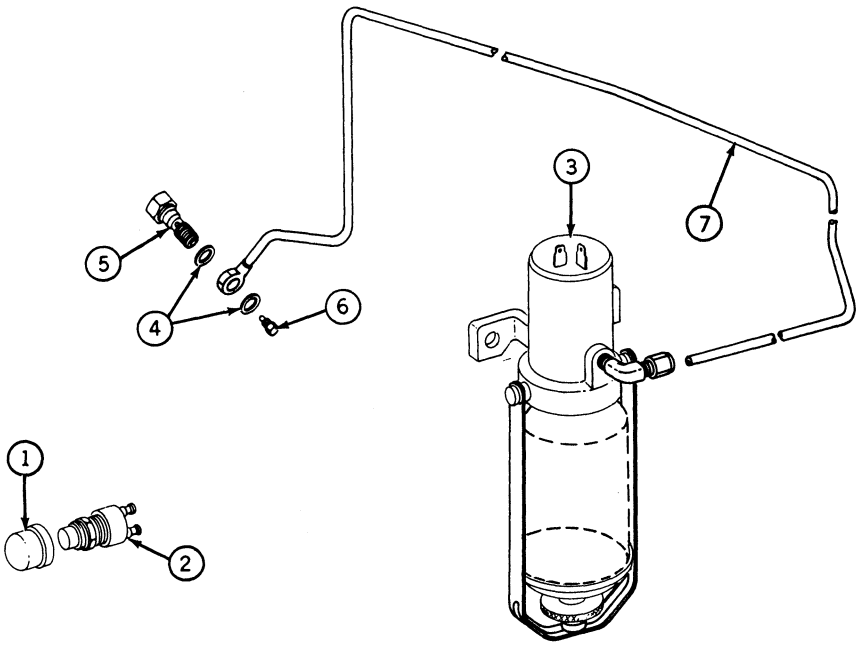

1—Control Button
2—Switch
3—Solenoid
4—Washers
5—Nozzle Adapter
6—Nozzle
7—Pipe

Fig. 63-Ether Starting Aid (8630 Tractor Illustrated)

ETHER STARTING AID—Continued

1—Control Button
2—Switch
3—Solenoid
4—Elbow
5—Nozzle Adapter
6—Nozzle
7—Pipe

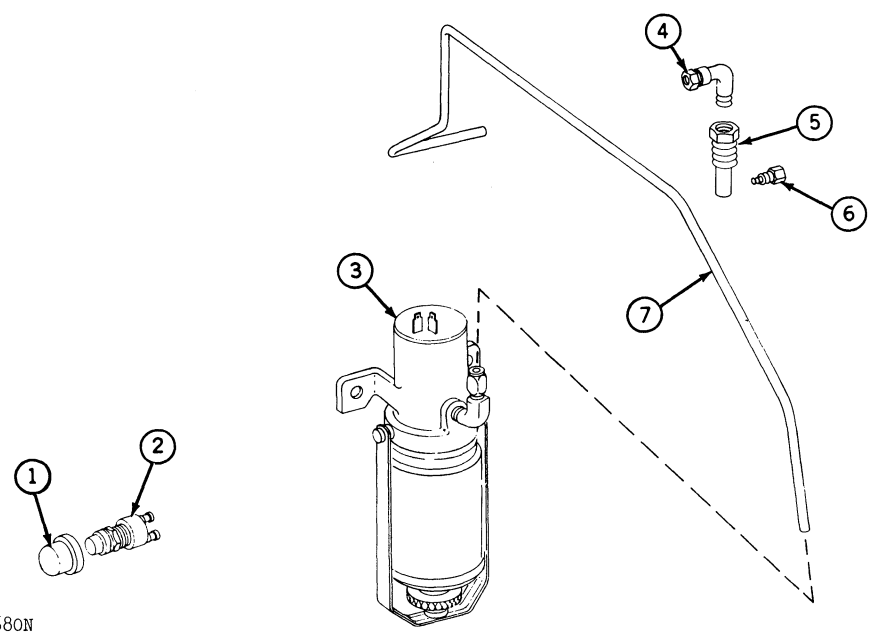

Fig. 64-Ether Starting Aid (8430 Tractor Illustrated)

General Information

Depressing the starting aid control button (1, Fig. 63 or 64) on the dash energizes the starting aid solenoid (3) when tractor is in neutral, which in turn opens the valve on the ether can. Ether is injected through a pipe (7) to a nozzle adapter (5) and spray nozzle (6) in the intake manifold cover, where it atomizes with intake air before entering the combustion chamber.

⚠ CAUTION: Ether starting fluid is highly flammable. Do not use near fire, sparks, or flames. Read the cautionary information on the container.

Removal, Service, and Installation

Use Fig. 63 or 64 as a guide for removing and installing the starting aid.

If switch or solenoid is defective, replace with a new one. Check the nozzle adapter and nozzle for plugging. Use compressed air to clean restricted passages. Make sure that the bore is not damaged or enlarged. Do not use any sealing compound on nozzle-to-nozzle adapter threads.

IMPORTANT: Make sure nozzle is secure in nozzle adapter. If nozzle comes out of adapter, serious engine damage may result.

Use new sealing washers (4, Fig. 63) on 8630 Tractor.

NOTE: Tighten the nozzle adapter adequately, but do not over tighten. Too much force will cause adapter to break off at hole just above threads.

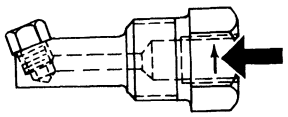

Fig. 65-Nozzle Location Arrow

On 8430 Tractor, install nozzle adapter in manifold cover with arrow (Fig. 65) pointing toward front of tractor. Spray nozzle will then also face toward front to spray ether in the approximate center of the intake manifold.

Install elbow fitting (4, Fig. 64) in nozzle adapter with pipe fitting end pointing straight back to receive the ether starting aid pipe. Connect pipe to elbow.

On all tractors, install a can on the solenoid to prevent dust from being drawn into the engine.

Group 15
DIESEL FUEL SYSTEM

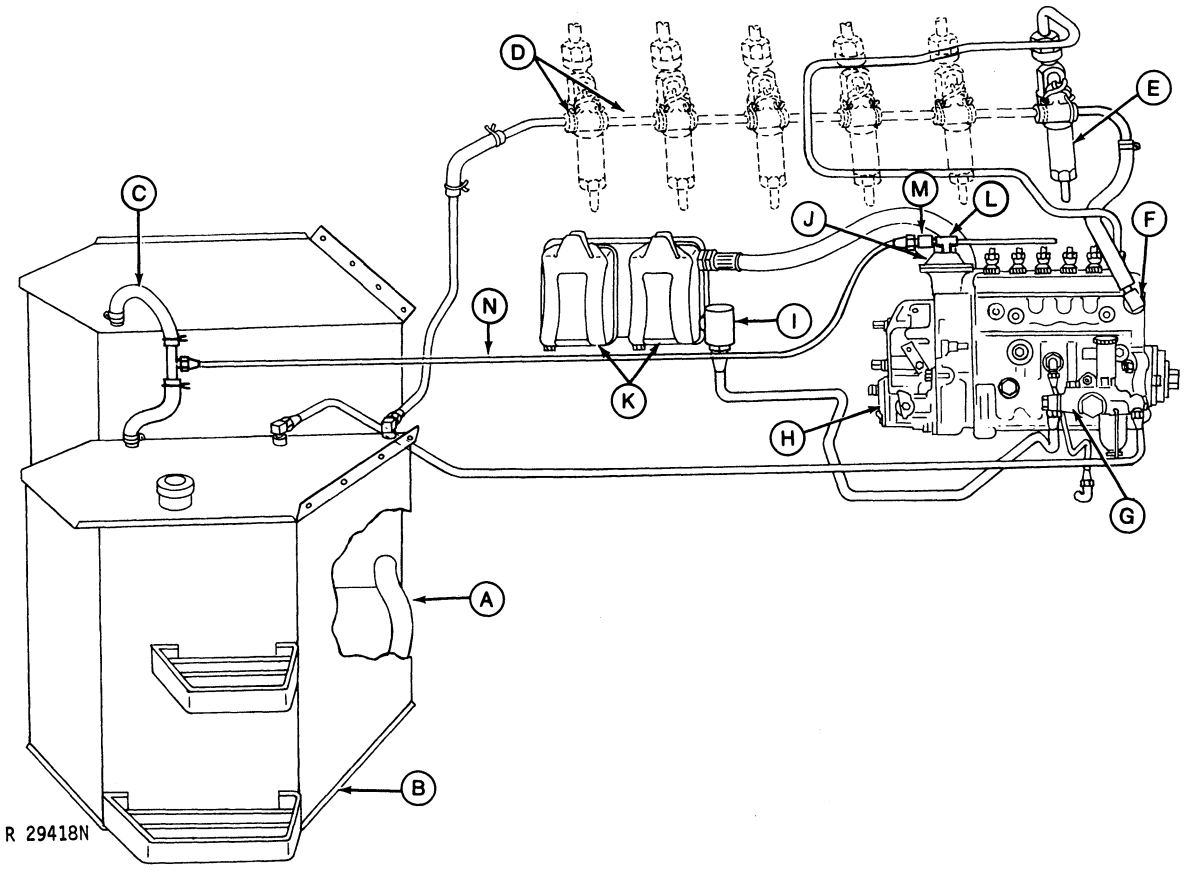

A—Cross-Over Hose
B—Fuel Tanks
C—Vent Hose
D—Leak-Off Boot, Pipe, and Hose
E—Injection Nozzle
F—Pressure Regulating Valve
G—Fuel Supply Pump
H—Injection Pump
I —Check Valve
J —Aneroid
K—Fuel Filters
L —Aneroid Tee
M—Filter
N—Air Line

Fig. 1-Diesel Fuel System

GENERAL INFORMATION

The left-hand and right-hand fuel tanks (B, Fig. 1) are interconnected by a cross-over hose (A) which provides an equal level of fuel in both tanks. This equal level is maintained until the fuel reaches the bottom of cross-over hose, about 3-1/2 in. (8.89 cm) from bottom of tank. If the fuel level drops further, fuel will be used from the right-hand tank only.

A venting fuel tank filler cap is used on the right-hand tank. The left-hand tank is vented by a rubber hose (C) that connects to both tanks.

On later models there is a strainer in the neck of the right-hand fuel tank. There is also a non-vented filler cap on it. On some models, vent line (C) vents both fuel tanks from cleaned turbo-charged inlet air. This is done with an orificed tee (L) to reduce pressure, a felt filter (M) to further clean the air, and a nylon line (N) to get the air to the vent line.

A supply pump (G) mounted on the injection pump draws fuel from the right-hand tank and directs it through the check valve (I) and fuel filters (K) to the injection pump (H). Pressurized fuel from the injection pump is delivered to the injection nozzles (E) and injected into the combustion chamber at approximately 3800-4200 psi (262-290 bar). Fuel leakage past the injection pump plungers is routed through the pressure regulating valve (F) and along with leakage past the injection nozzle valve is returned to the right-hand fuel tank through the leak-off boots and lines (D).

Smoke emission during acceleration is limited by a fuel control device called an aneroid (J). At engine speeds above 1000 rpm or 10 psi (1 bar) manifold pressure, the aneroid has no effect on fuel delivery.

FUEL TANKS

Removal

Drain the fuel from both tanks. Capacity of each tank is 78 U.S. gallons (295 l).

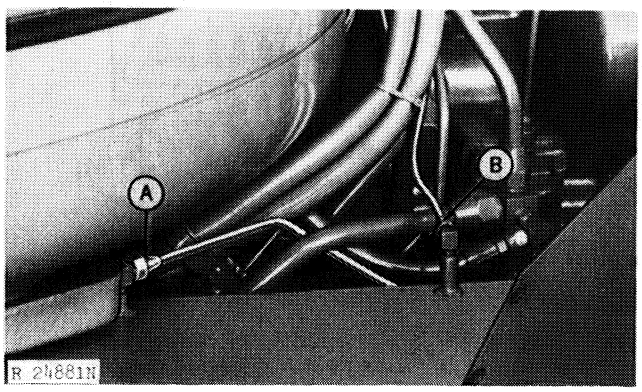

A—Outlet Pipe **B—Return Pipe**

Fig. 2-Fuel Tank Pipe Connections

Disconnect the fuel outlet pipe (A, Fig. 2) and the fuel return pipe (B) at connections on the right-hand fuel tank. Disconnect the vent hose (C, Fig. 1) from both tanks.

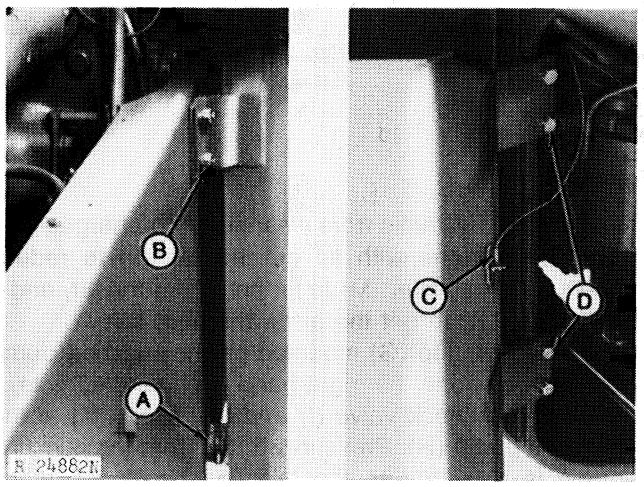

A—Cross-Over Hose Clamp
B—Front Mounting Bracket Screws
C—Fuel Gauge Sender Wire
D—Rear Mounting Bracket Screws

Fig. 3-Fuel Tank Mounting Screws

Loosen the fuel tank-to-crossover hose clamps (A, Fig. 3) at bottom front corner of tanks. Disconnect fuel gauge sending unit wire (C) from left-hand tank.

Provide a suitable means of supporting the tank during removal. Remove two mounting screws at front (B) and four cap screws from rear (D) of tank. Remove tank from tractor and place in a stable position. Plug or cap tank openings to prevent entry of foreign material.

Repair

⚠ CAUTION: Cleaning and repairing a fuel tank is very dangerous. Live sparks, smoking, or fire of any nature should never be permitted in the vicinity of the cleaning or repairing operation.

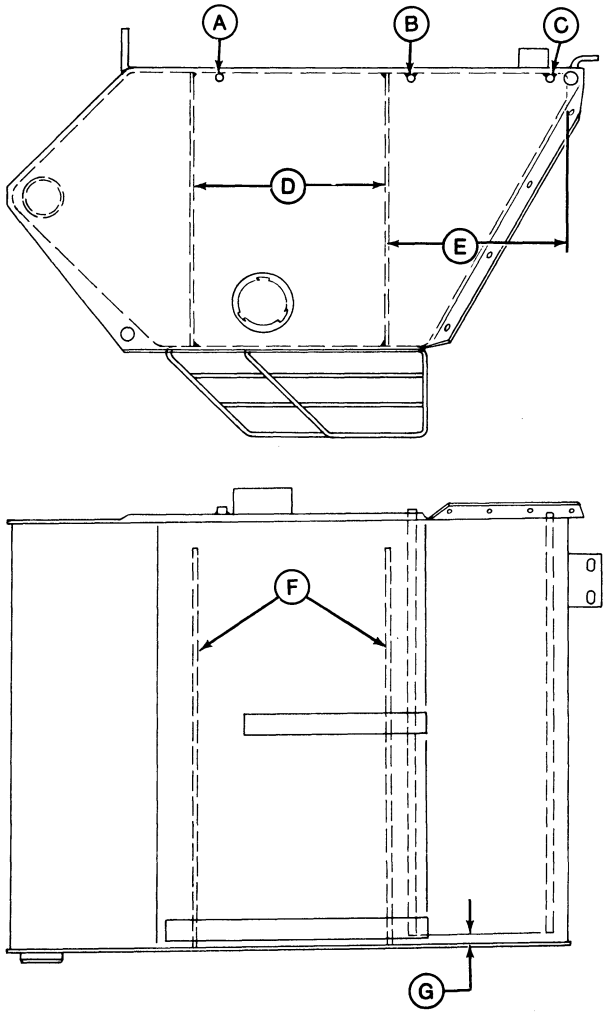

A—Vent
B—Fuel Outlet
C—Fuel Return
D—13.96 in. (35.45 cm)
E—12.68 in. (32.2 cm)
F—Baffles
G—0.512 in. (13 mm)

Fig. 4-Cross Sectional Views of Right-Hand Fuel Tank (Early Models)

FOS

Refer to "Inspection and Repair of Fuel Tanks" in Chapter 5, FOS Manual 30-ENGINES for specific repair information.

Fig. 4 shows locations of tubes (B and C) and baffles (F) used in the right-hand fuel tank. The left-hand tank has baffles in the same locations, but does not have tubes (fuel outlet and leak-off). If repairing left-hand tank, remove fuel gauge sender.

Installation

If tank was repaired, the inside must be as clean and dry as possible before installing.

Install fuel gauge sending unit (if removed).

Install fuel tanks by reversing the removal steps. Tighten hose clamps and pipe connectors securely to prevent leakage. Connect wiring to fuel gauge sending unit.

Fill tank with the proper grade of clean fuel (refer to the tractor operator's manual). Check the vent hole in fuel tank cap to make sure it is not plugged.

Bleed the fuel system (page 30-15-4).

FUEL TANK VENTING

As explained earlier, the fuel tanks on some models are vented with clean air from the turbocharger. To see if the tanks are being vented, either feel for air coming out of the orifice on the aneroid tee or take the fuel tank cap off and listen for a rush of air. If there is no rush of air, check the nylon line from the aneroid tee and the felt filter to see if it is clean. The filter should not have to be replaced, because the air it is cleaning has already been filtered at the intake system.

FUEL GAUGE SENDER

Removal

Be sure that the fuel level is below the sender unit mounting flange. Disconnect the wiring lead (C, Fig. 3), and remove the five mounting flange attaching screws. Remove sender unit from tank.

Test and Repair

The fuel gauge sender may be tested for proper operation by using an ohmmeter (B, Fig. 5) to measure the resistance when float (C) is at the empty position (D) and full position (E).

To measure sender resistance, attach ground lead of ohmmeter to sender mounting flange (A). Attach the other lead to the sender terminal.

With float in empty position, ohmmeter should show 0-0.5 ohms. With float in full position, ohmmeter should show 88-92 ohms. Replace a defective sender with a new one.

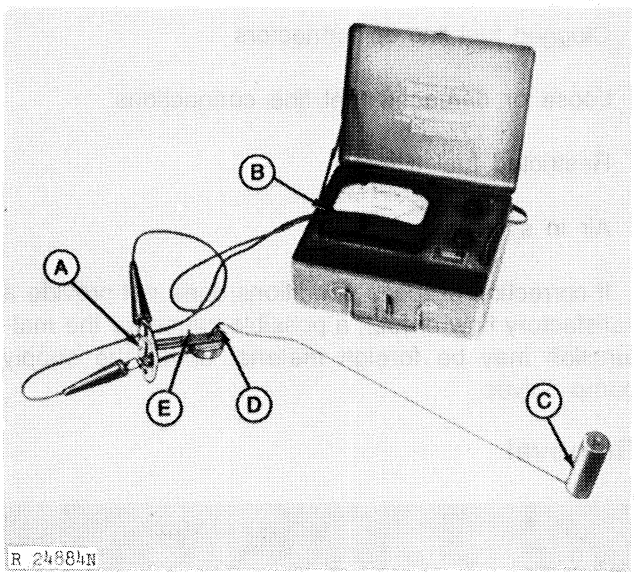

A—Mounting Flange
B—Ohmmeter
C—Float
D—Empty Position
E—Full Position

Fig. 5-Testing Fuel Gauge Sender

Installation

Install sender using a new gasket. Tighten mounting screws securely, and connect gauge wire.

FUEL SUPPLY PUMP

General Information

The fuel supply pump (Fig. 6) is mounted on the side of the fuel injection pump. It is operated by an eccentric on the injection pump camshaft.

Fuel is drawn from the right-hand tank, flows through a preliminary filter, and enters the inlet side of the single-acting, plunger-type fuel supply pump. This pump increases the fuel pressure to 20-25 psi (1-2 bar), and forces the fuel through the check valve and filters to the injection pump.

FUEL SUPPLY PUMP—Continued

Diagnosing Malfunctions

Before replacing the pump when fuel does not flow (or only a small amount flows), check the following sources that would limit pump performance:

Fuel partially restricted at tank

Clogged fuel line or connectors

Loose or damaged fuel line connections

Restricted fuel filters

Air in system

If correction of these conditions does not provide a satisfactory flow of fuel, a possible cause for the malfunction may be foreign material under the supply pump valves.

Removal

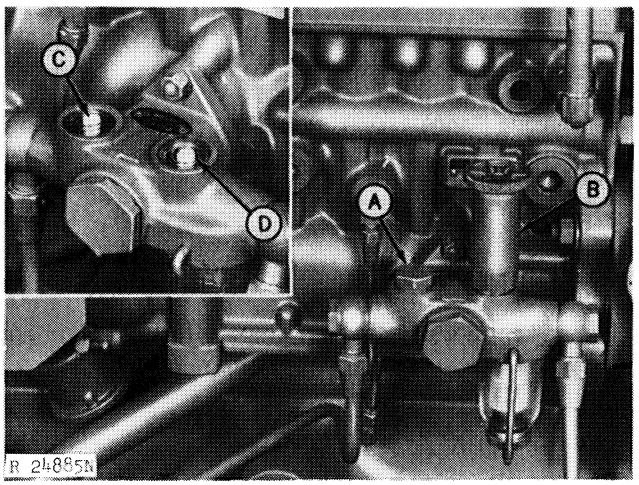

A—Plug **C—Valve**
B—Hand Primer **D—Spring**

Fig. 6-Supply Pump Valves and Springs

To gain access to the valves, remove plug (A, Fig. 6) and hand primer (B). Take out valves (C) and springs (D). Inspect valves and valve seats for foreign material, wear, or pitting. Valve springs must not be broken.

If problem can not be located, it will be necessary to remove the supply pump and repair as required. Refer to Section 40, TM-1065, "Fuel Injection Equipment - Robert Bosch" for repair and testing instructions.

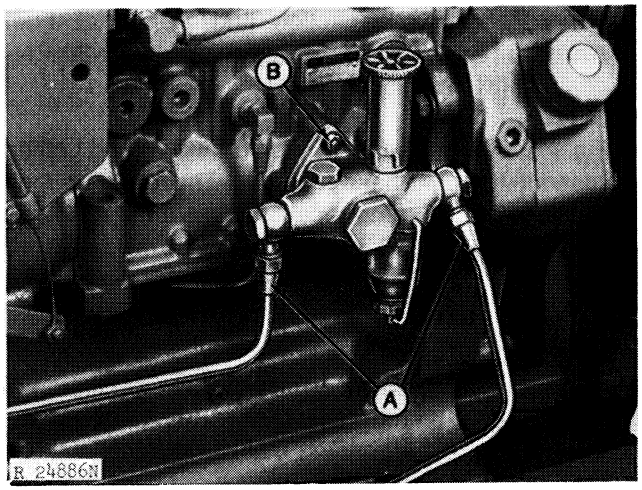

A—Inlet and Outlet Pipes **B—Mounting Stud Nut**

Fig. 7-Fuel Supply Pump Removal

Disconnect the pump inlet and outlet pipes (A, Fig. 6).

Remove the three mounting stud nuts (B), and lift out pump from injection pump housing.

Repair

Refer to Section 40, TM-1065 "Fuel Injection Equipment—Robert Bosch" for repair and testing instructions.

Installation

Remove all the old gasket material on the injection pump mounting pad. Install the supply pump using a new gasket. Tighten stud nuts 4-5 ft-lbs (5-7 Nm) torque.

Connect the fuel pipes and bleed the fuel system.

Litho in U.S.A.

FUEL CHECK VALVE

General Information

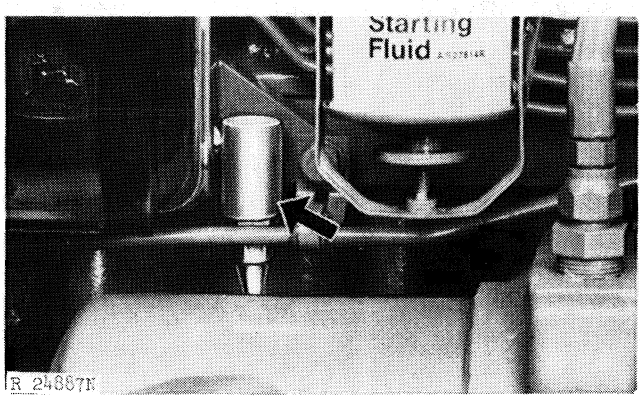

Fig. 8-Fuel Check Valve Assembly

A fuel check valve assembly (Fig. 8) located at the fuel inlet on filter base, is used to prevent fuel in filters, injection pump housing, and lines from draining back into the fuel tank. Fuel drain-back can be a prime cause of hard starting.

Removal

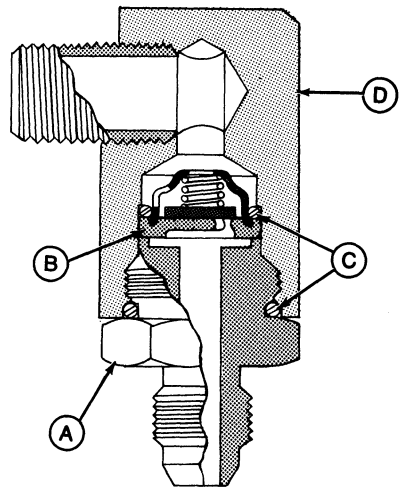

A—Connector
B—Check Valve
C—O-rings
D—Valve Body

Fig. 9-Cross-sectional View of Fuel Check Valve Assembly

Disconnect the fuel pipe and unscrew connector (A, Fig. 9). Check valve (B) will fall out of housing when connector is removed.

To remove valve body (D), take off the fuel filters, and separate filter base from mounting bracket to permit valve body to be unscrewed from filter base.

Repair

Before replacing the valve components, inspect to make sure that there is no foreign material which may be keeping valve open. Use compressed air to remove foreign material from valve and valve body.

Installation

Position new O-rings (C) on check valve and connector. Install valve and connector in valve body, and connect fuel pipe.

FUEL FILTERS

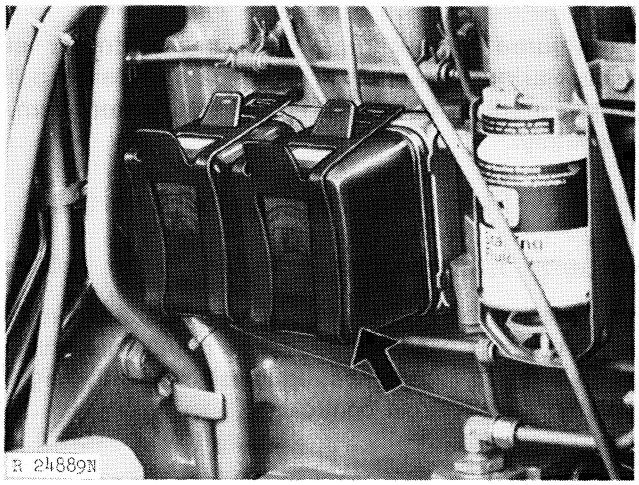

Fig. 10-Fuel Filters

A combination first and second stage filter element is contained in the sediment bowl as a complete assembly. The filters (Fig. 10) should be changed whenever a tune-up or an overhaul has been performed on the engine. Otherwise, change as often as necessary. See the tractor operator's manual for service instructions.

BLEEDING FUEL SYSTEM

Whenever the fuel filters have been removed or the fuel system lines have been disconnected, bleed the air from the fuel system before attempting to start the engine. (See the tractor operator's manual for bleeding instructions.)

CAUTION: Escaping hydraulic oil or diesel fuel under pressure can have sufficient force to penetrate the skin, causing serious personal injury. Before disconnecting lines be sure to relieve all pressure. Before applying pressure to the system, be sure all connections are tight and that lines, pipes and hoses are not damaged. Fluid escaping from a very small hole can be almost invisible. Use a piece of cardboard or wood, rather than hands, to search for suspected leaks.

If injured by escaping fluid, see a doctor at once. Serious infection or reaction can develop if proper medical treatment is not administered immediately.

FUEL INJECTION PUMP

General Information

Either a Robert Bosch PES6P or a Nippondenso P series pump is used. Both of these pumps are multiple-plunger, in-line pumps, equipped with a flyweight governor and aneroid control.

Removal

Clean the injection pump, pipes, and area around the pump with cleaning solvent or a steam cleaner.

IMPORTANT: Never steam clean or pour cold water on an injection pump while the pump is running or while it is warm. To do so may cause seizure of pump parts.

On 8430 Tractors, separate the crankcase vent hose (A, Fig. 11) from the vent pipe (B). Remove the two plastic plugs (C) from flywheel housing and install JDE-81-1 Engine Turning Tool (D) and JDE-81-4 Timing Pin (E).

On 8630 Tractors, merely remove the two plastic plugs and install the turning tool and timing pin as shown in Fig. 11.

Use the following method to remove the fuel injection pump:

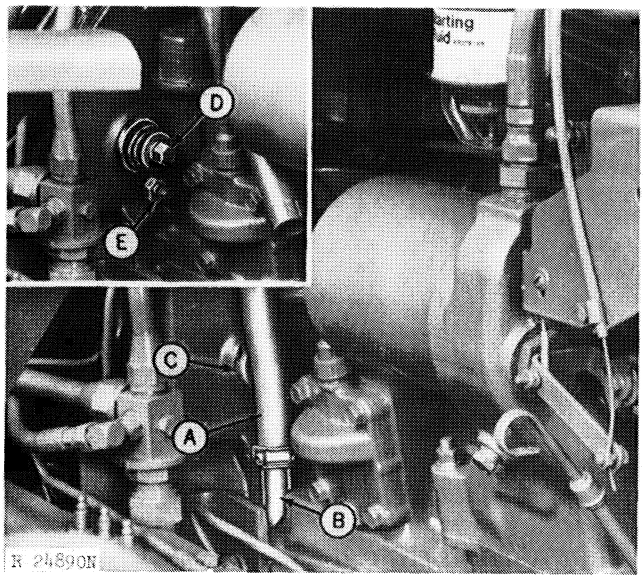

A—Vent Hose
B—Vent Pipe
C—Plastic Plug
D—JDE-81-1 Engine Turning Tool
E—JDE-81-4 Timing Pin

Fig. 11-Installing JDE-81-1 Engine Turning Tool and JDE-81-4 Timing Pin (8430 Illustrated)

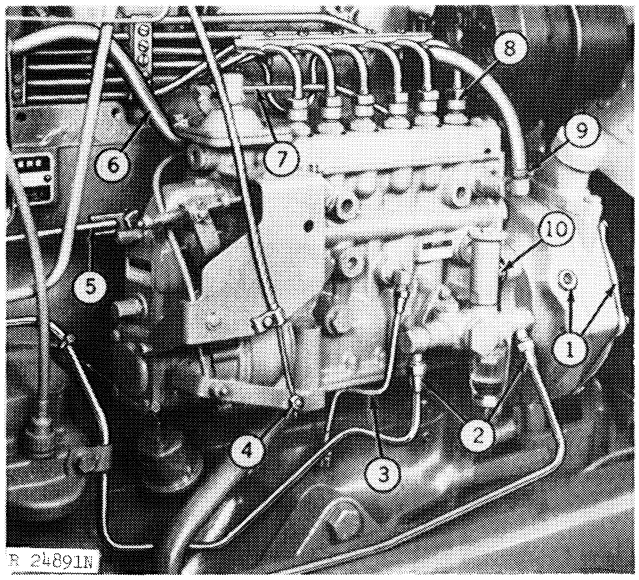

Fig. 12-Injection Pump Removal Steps (8630 Illustrated) (Early Model)

1. Remove the timing hole plug and timing gear cover (Figs. 12 and 13). Using JDE-81-1 Engine Turning Tool, rotate engine in direction of rotation until the timing mark on the pump drive hub (view through timing hole, F, Fig. 8) is aligned with the pointer, and the JDE-81-4 Timing Pin (E, Fig. 11) is engaged in hole of flywheel. Engine is now at TDC, with No. 1 piston on the compression stroke. This is the required engine position when installing the pump back on the engine.

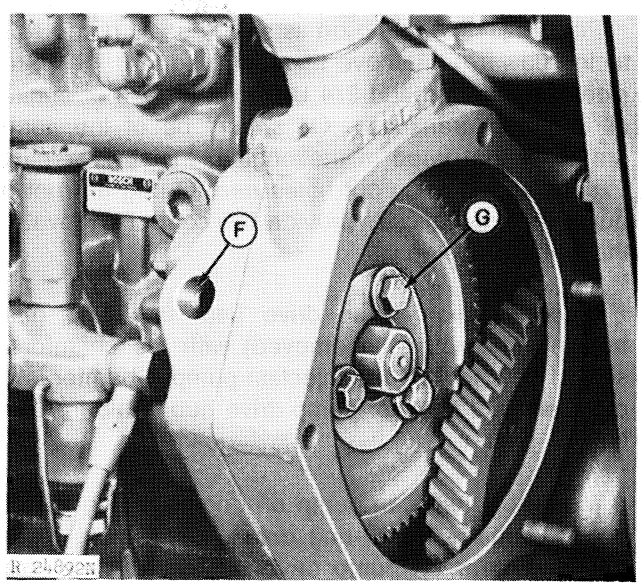

F—Timing Hole **G—Cap Screws**

Fig. 13-Timing Hole and Drive Gear Cap Screws (8630 Illustrated)

Remove the three cap screws (G, Fig. 13) which secure the injection pump drive gear to the pump drive hub. Four cap screws are used on the 8430 drive gear.

2. Disconnect the supply pump inlet and outlet pipes.

3. Disconnect and remove the engine block-to-pump crankcase lubrication pipe (pumps without hydraulic aneroid activator).

NOTE: If injection pump is equipped with a hydraulic aneroid activator, disconnect and remove the lubrication pipe connecting the engine block (early 8630) or oil filter body (8430 and late 8630) to the "T"-fitting at aneroid activator housing (Fig. 27). It is not necessary to disconnect or remove pipe at pump crankcase.

4. Disconnect the fuel shut-off cable.

5. Disconnect the speed control rod at injection pump.

NOTE: 8430 tractor only - The injection pump can not be removed unless the oil filter body (L, Fig. 14) has first been removed.

Remove dipstick (H). Drain filter body at plug (K). Remove oil filter element and disconnect turbocharger lubrication hose at (J). Remove two mounting stud nuts and one cap screw (I). Lift off filter body.

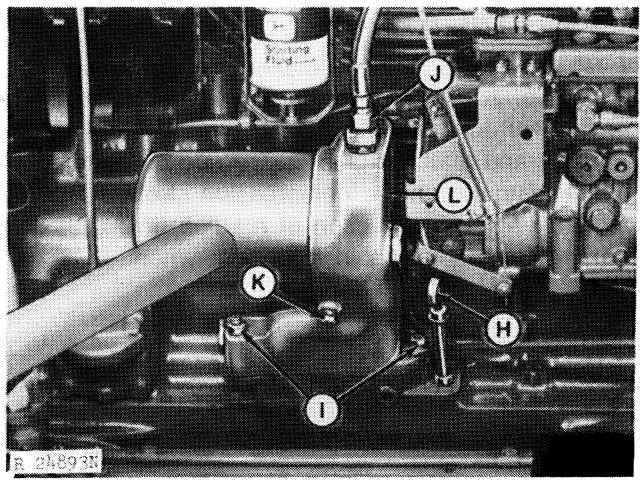

H—Dipstick **J—Lubrication Hose**
I —Mounting Stud Nuts and Cap Screw **K—Drain Plug**
L—Oil Filter Body

Fig. 14-Removing Oil Filter Body and Dipstick (8430 Only)

6. Disconnect injection pump fuel inlet hose.

7. Disconnect the intake manifold-to-aneroid pipe.

8. Disconnect the high pressure fuel pipes, using JDE-90 Open Serrated Wrench to hold the fuel outlet fitting on pump while loosening the line connections.

9. Disconnect the fuel return hose.

10. Remove the four mounting stud nuts which secure the injection pump to the cylinder block.

Plug or cap all fuel and oil pipes and hoses. Carefully remove the injection pump.

Repair

Do not attempt to disassemble or test the injection pump unless the proper service tools, test equipment, and service information are available.

For injection pump repair information and specifications refer to one of the John Deere technical manuals. Either TM-1065, "Fuel Injection Equipment-Robert Bosch" or TM-1176 "Fuel Injection Equipment-Nippondenso.

Installation

Check engine timing to make sure that engine is at TDC (No. 1 on compression stroke). If engine timing is not correct, use the JDE-81-1 Turning Tool (D, Fig. 11) and rotate engine in direction of rotation until No. 1 piston is on the compression stroke. Continue to turn engine in direction of rotation until JDE-81-4 Timing Pin (E) drops in hole of flywheel.

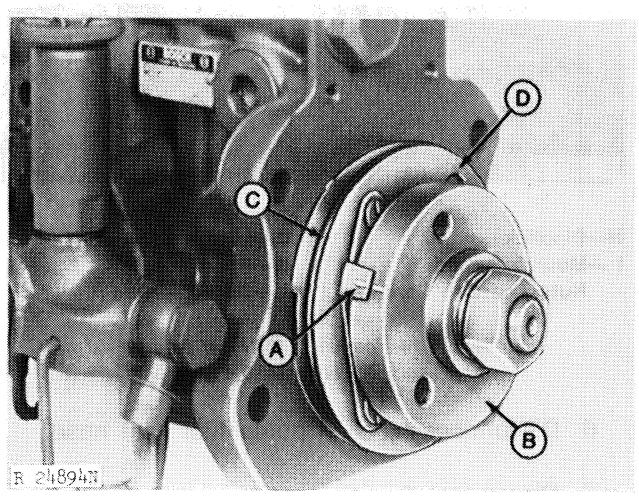

A—Pointer **C—O-Ring**
B—Drive Hub **D—Bearing Plate**

Fig. 15-Timing Marks and O-Ring

Rotate injection pump drive hub until marks on drive hub (B, Fig. 15) and pointer (A) are in alignment.

Install a new O-ring (C) on bearing plate (D). Lightly lubricate the O-ring to make installation of the pump easier and also to help prevent damage to the O-ring.

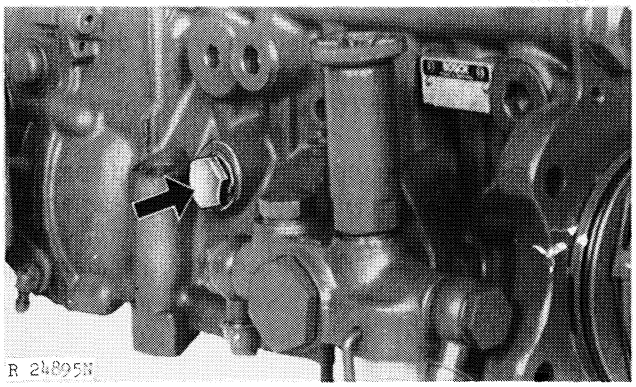

Fig. 16-Pump Crankcase Filler Plug

Place injection pump on its side (supply pump side facing upward). Remove the filler plug (Fig. 16) from side of pump and add 3/4 U.S. pint (0.47 l) of engine oil in pump crankcase. Oil should be of the same grade as that used in the engine. Install filler plug. Excess oil will drain out holes near O-ring at front of pump to automatically provide the correct oil level in the pump housing.

Place injection pump drive gear in timing gear housing (if previously removed) with the chamfered side of gear toward the injection pump. Chamfer is at outer edge of bore for pump drive hub to aid installation of gear.

Mount the injection pump on engine, being careful not to damage the O-ring during installation. Install the drive gear on pump drive hub, positioning gear so that the cap screws which secure the gear to the drive hub will be in the approximate center of gear slots. Doing so, will permit the pump timing to be changed, should the need arise.

Install drive gear cap screws (G, Fig. 13) and tighten securely. Tighten the injection pump mounting stud nuts (10, Fig. 12) securely.

Rotate the engine 1-1/2 revolutions in direction of rotation. Continue to turn the engine until the timing pin drops in flywheel hole for TDC.

Recheck the alignment of the injection pump timing marks. If the marks are not in line, loosen the pump gear cap screws, and bring marks into alignment.

IMPORTANT: The normal backlash of gears is enough to throw the pump timing off by several degrees, resulting in poor engine performance. Therefore, it is very important that the timing of the pump be rechecked after it has been installed. To avoid backlash, always approach the timing mark on pointer by turning engine in direction of rotation.

Tighten drive gear cap screws and pump mounting stud nuts to 35 ft-lbs (47 Nm) torque. Install timing hole plug and cover plate (1, Fig. 12).

On 8430 Tractors, use a new oil filter body-to-engine block gasket, and install filter body (Fig. 14). Install dipstick and a new oil filter element. Connect the turbocharger oil lubrication hose. Be sure that the drain plug is installed in filter body.

Remove protective caps and plugs from lines and injection pump. Connect pipes to pump. Use JDE-90 Wrench on pump fuel outlet fitting when tightening fuel lines.

IMPORTANT: If a fuel outlet fitting (delivery valve holder) turns while installing a fuel line, the injection pump fuel delivery will be altered, making recalibration on a test stand necessary.

Leave speed control rod and fuel shut-off cable disconnected for checking pump idle speeds. Bleed the fuel system using the hand primer on supply pump.

Adjustments

It is important to check the injection pump slow and fast idle speeds before checking the speed control linkage adjustment (see Group 20 of this section). If the pump idle speeds are not correct, adjusting the speed control linkage will be of little benefit.

To check the pump idle speeds, the speed control rod and fuel shut-off cable must be disconnected to insure that a possible false reading does not occur.

Start the engine and finish bleeding the fuel system if air is still present in system. Operate engine until it is thoroughly warmed-up.

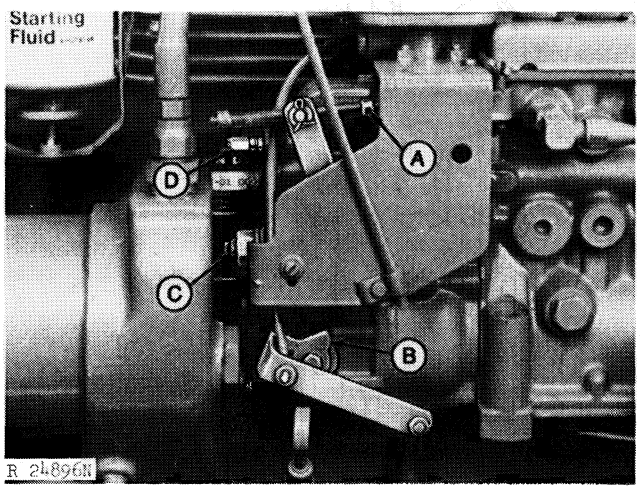

A—Stop Collar
B—Shut-Off Lever
C—Idling Spring Screw
D—Slow Idle Screw Cap Nut

Fig. 17-Injection Pump Idle Speed Adjustments (8430 Illustrated)

On tractors without a hydraulic aneroid activator, loosen the stop collar (A, Fig. 17) to provide free movement of the governor control lever. The fuel shut-off lever (B) must be all the way forward.

Disconnect the tachometer drive cable (E, Fig. 18) and install JDE-28 Speed Adapter (G). Run the engine at fast idle speed by pushing the governor control lever all the way forward against the fast idle stop screw.

Using an accurate tachometer (F), the fast idle speed should be 2225-2325 rpm. In event that the fast idle speed is not within the specified range, the injection pump will have to be removed from the engine and adjusted on the test stand. Refer to Group 15, Section 50 of TM-1065 "Fuel Injection Equipment - Robert Bosch".

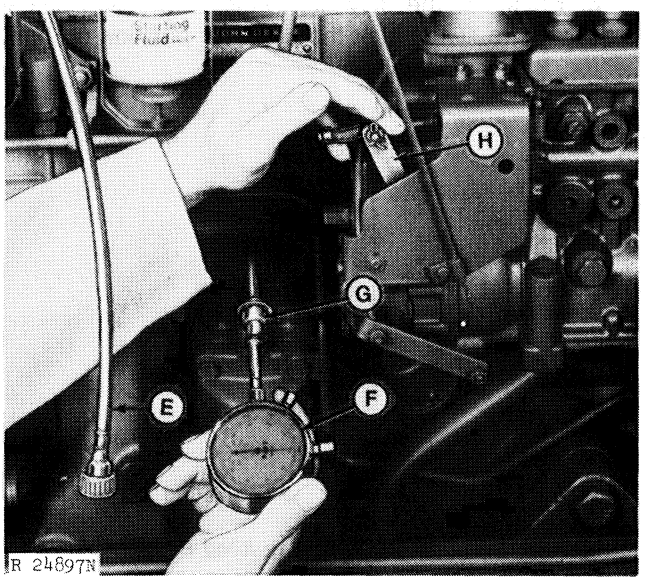

E—Tachometer Cable
F—Tachometer
G—JDE-28 Speed Adapter
H—Governor Control Lever

Fig. 18-Checking Injection Pump Slow Idle Speed

To check the slow idle speed, hold the governor control lever (H, Fig. 18) rearward as far as it will go. The slow idle speed should be 780-820 rpm.

If the engine does not idle within the specified range, remove the slow idle stop screw cap nut (D, Fig. 17) and adjust the stop screw to obtain the correct slow idle speed.

NOTE: Changing the supplementary idling spring adjustment will also alter the engine speed. This adjustment should not be changed unless surging developed after the slow idle stop screw was adjusted to obtain the correct speed. (See next page.)

Clockwise rotation (from rear) of the slow idle stop screw or the supplementary idling spring will increase the engine speed. Counter-clockwise rotation will decrease engine speed.

Litho in U.S.A.

Adjustments—Continued

Should the slow idle speed be irregular (surges) after adjustment has been made, perform the following steps to try to correct the problem:

1. Remove the supplementary idling spring (D, Fig. 17). On 8430 Tractors, loosen lock nut and remove spring by unscrewing assembly from housing. On 8630 Tractors, remove cap nut, loosen lock nut, and unscrew assembly from housing.

2. Adjust the slow idle stop screw to obtain 780-820 rpm.

3. Back out the slow idle stop screw one-half to one full turn. Then lock the screw in position by tightening lock nut.

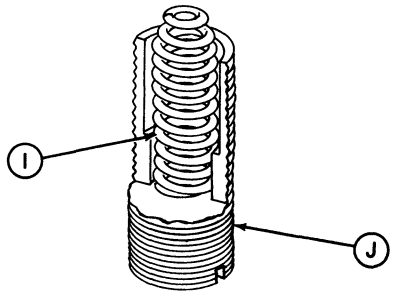

I—Spring **J—Adjusting Screw**

Fig. 19-Supplementary Idling Spring Assembly

4. Install the supplementary idling spring assembly (Fig. 19). Idling spring (I) is attached to adjusting screw (J). Turn the screw in just enough to obtain 780-820 rpm, but do not exceed 850 rpm. Tighten lock nut.

IMPORTANT: If slow idle stop screw and supplementary idling spring are not adjusted according to the above instructions, engine damage could result because of overspeeding.

Again check engine performance at 780-820 rpm. If engine continues to surge at slow idle, replace the supplementary idling spring with a new one using the procedure outlined above. Discard any idling spring that is bent inside the cap, as it will not function properly.

When surging or hunting persists, remove the pump from the engine, and repair as instructed in TM-1065.

After the adjustments have been completed, install cap nuts on slow idle stop screw, and on 8630 idling spring.

Connect the speed control rod and fuel shut-off cable to pump. Check the speed control linkage adjustment, and adjust if required. (See Group 20 of this section.)

ANEROID

General Information

The aneroid (Figs. 20 and 21) is a diaphragm-type control unit that mounts on top of the governor housing. The purpose of an aneroid is to limit the amount of black smoke produced during acceleration from slow idle to approximately 1000 engine rpm, when under moderate to heavy load conditions.

In this speed range, an adequate quantity of air from the turbocharger is not available to match the amount of fuel injected into each cylinder. The aneroid limits the quantity of fuel delivered (thus reducing the smoke level) until adequate air is available. Under light load conditions, the aneroid limits smoke during acceleration at any speed.

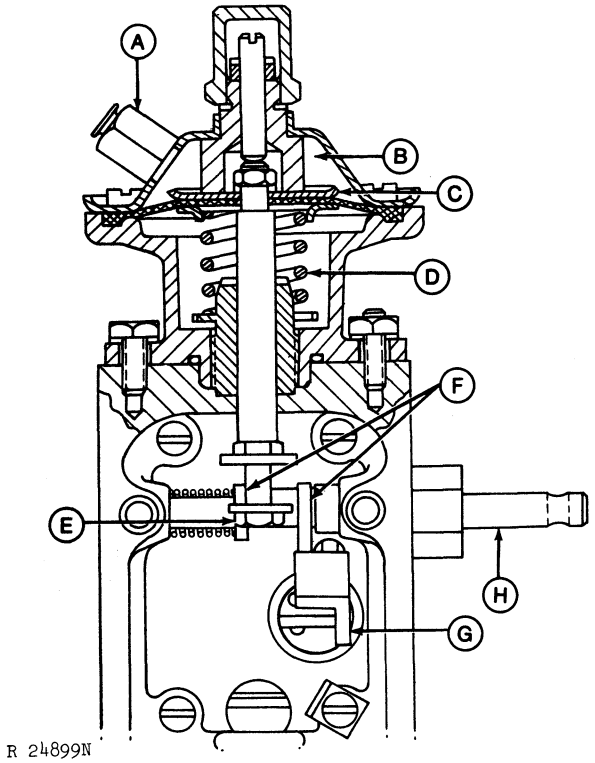

A—Intake Manifold Pressure Opening
B—Diaphragm Chamber
C—Diaphragm
D—Spring
E—Adjusting Shaft Screw
F—Arm
G—Control Rack
H—Starting Fuel Shaft

Fig. 20-Aneroid

Intake manifold pressure at (A, Fig. 20) is directed to the upper side of the diaphragm chamber (B) exerting pressure on diaphragm (C). When the intake manifold pressure is sufficient (usually about 10 psi [1 bar], or about 1000 engine rpm under moderate to full load conditions), spring pressure (D) is overcome and the diaphragm moves the adjusting shaft (E) downward.

Arm (F) has two "legs", the inner leg bearing on the flat surface of adjusting shaft screw (E), and the outer leg bearing against a shoulder on the control rack (G). Downward movement of the adjusting shaft causes arm to rotate on starting fuel control shaft (I) and allows control rack to travel its normal amount.

When the intake manifold pressure is below 10 psi (1 bar) because of low engine speed or light load conditions at higher engine speeds, the aneroid spring pressure is greater than the intake manifold pressure. As a result, the control rack travel is limited (therefore, fuel delivery is limited) by the arm. Aneroid control will be in effect until the manifold pressure is sufficient to overcome diaphragm spring pressure.

Removal

Pumps Without Hydraulic Aneroid Activator

Disconnect the fuel shut-off cable and starting fuel control cable at A, Fig. 21. Remove bracket cap screw.

Remove the two flat-head screws which retain cover (B) to pump housing and slide cover forward. This is necessary to provide enough room for the linkage cable to be removed from between pump housing cover and aneroid (G).

Disconnect the starting fuel control linkage swivel (D) from governor control lever. Remove cotter pin and washer from bell crank pin. This permits the control linkage to be removed from the pump without removing the lever arm from the starting fuel control shaft (B, Fig. 33).

NOTE: On 8430 tractors, the oil filter base must be removed to permit removal of cap screw that secures rear end of bracket to governor cover. See Fig. 14.

Remove two stud nuts (E) which fasten bell crank bracket (C) to aneroid. Lift off bell crank bracket.

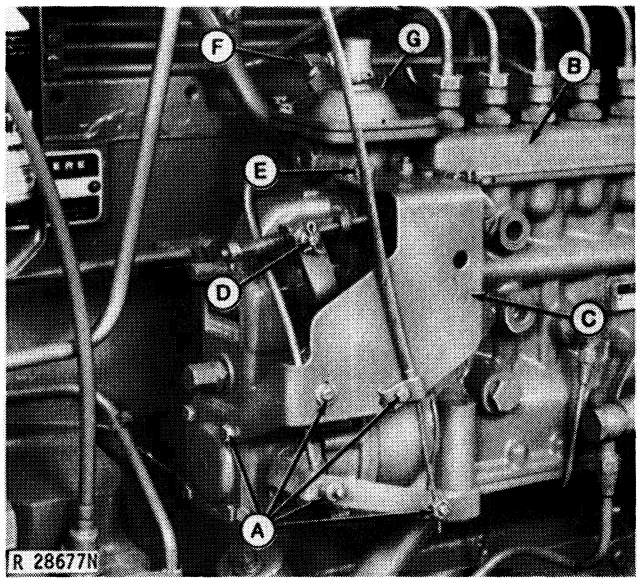

A—Fuel Shut-Off Cable and Starting Fuel Control Cable
B—Cover
C—Bell Crank Bracket
D—Swivel
E—Stud Nuts
F—Manifold Pressure Pipe
G—Aneroid

Fig. 21-Aneroid Removal On Pumps Without Hydraulic Activator (8630 Illustrated)

Disconnect the intake manifold pressure pipe (F) at elbow fitting.

Remove lead seal from two cap screws which fasten aneroid to governor housing next to engine block. Remove cap screws.

Push in on the starting fuel control shaft. Lift aneroid straight up out of governor housing.

Pumps With Hydraulic Aneroid Activator

Loosen lock screw on fuel shut-off lever swivel (lower screw A, Fig. 22). Remove the upper screw (A) and clamp which secures the fuel shut-off cable to bracket.

Disconnect the intake manifold pressure pipe (B) at elbow fitting.

Remove the lead seal wire (C) from two cap screws that fasten the aneroid (D) to the governor housing. Remove the cap screws and mounting stud nuts at (C).

Lift out aneroid from governor housing.

Pumps With Hydraulic Aneroid Activator—Continued

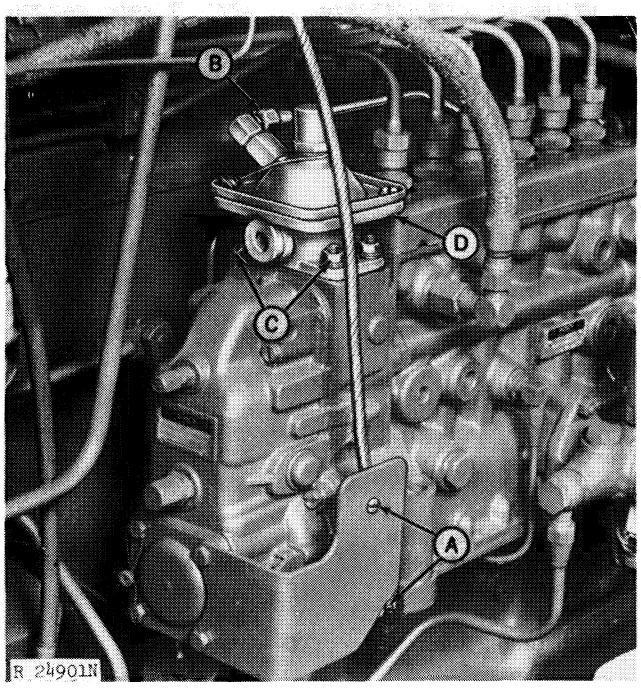

A—Screws
B—Manifold Pressure Pipe
C—Seal Wire and Mounting Screws
D—Aneroid

Fig. 22-Aneroid Removal On Pumps With Hydraulic Aneroid Activator (8630 Illustrated)

Repair

To repair the aneroid, consult Section 30, TM-1065 "Fuel Injection Equipment—Robert Bosch".

If the adjusting shaft special screw adjustment has been altered, it must be reset to a specified dimension. (See "Specifications", page 30-15-1 in TM-1065.)

Installation

Pumps Without Hydraulic Aneroid Activator

Install a new O-ring (A, Fig. 23) on bottom of aneroid housing.

Place end of arm (C) in the approximate centerline (cross-wise) of hole. Positioning arm too high or too low will prevent it from engaging between special washers (D) when aneroid is installed.

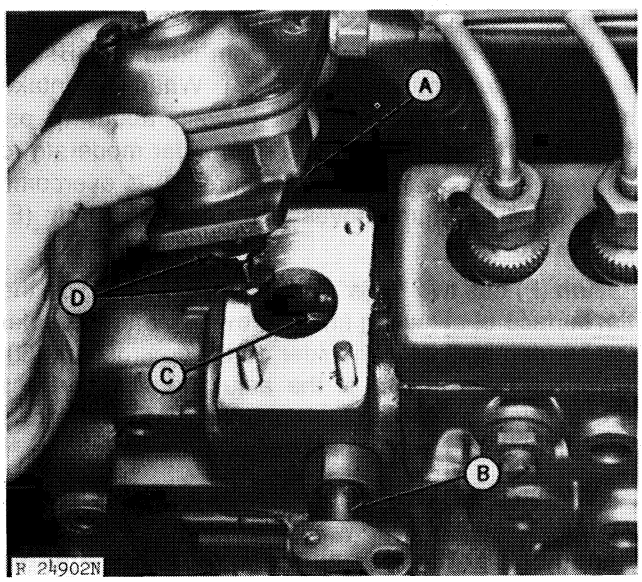

A—O-Ring
B—Starting Fuel Control Shaft
C—Arm
D—Special Washers

Fig. 23-Installing Aneroid on Pumps Without Hydraulic Aneroid Activator

Insert lower end of aneroid into hole, tipping slightly so that cap screw side of aneroid base is lower than stud side of base. Straighten aneroid just enough to permit pushing into place.

Check operation of starting fuel control shaft (B) to make certain that arm is engaged between special washers before completing installation. To do so, pull the fuel shut-off lever all the way back. The starting fuel control shaft should move outward. Now, push in on fuel control shaft. A click should be heard as the rack travels all the way forward. When satisfied that the arm is engaged with the special washers, continue with the installation.

Install the two aneroid mounting cap screws (Fig. 21).

Insert bell crank pin in hole of lever arm and at same time, position bell crank bracket on aneroid base. (See "Starting Fuel Control Linkage" in Group 20 of this section for detailed instructions.) Secure bracket to aneroid with washers and nuts. Fasten rear of bracket to governor cover with cap screw.

Install control cable and fuel shut-off cable. Adjust cables and fuel control linkage according to instructions given in Group 20 of this section.

Connect the manifold pressure pipe to the aneroid. Fasten pump cover to pump housing. Install lead seal wire in the two mounting base cap screws.

Pumps With Hydraulic Aneroid Activator

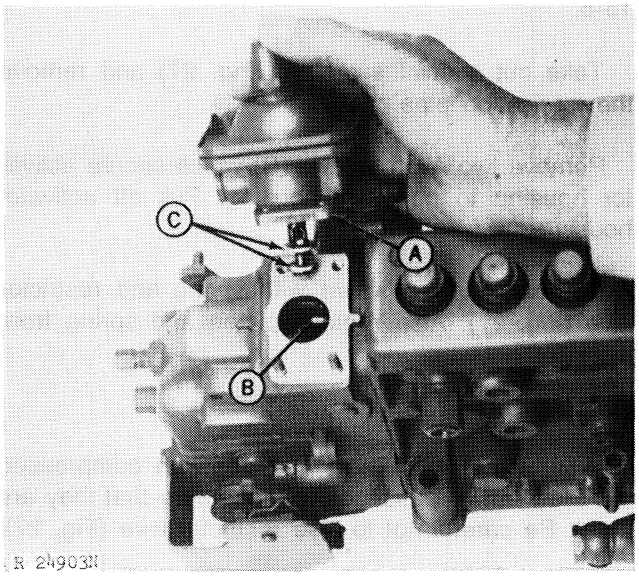

A—O-Ring **C—Special Washers**
B—Arm

Fig. 24-Position of Arm For Installing Aneroid (Pumps With Hydraulic Activator)

Install a new O-ring (A, Fig. 24) on bottom of aneroid housing.

Place end of arm (B) in the approximate centerline (cross-wise) of hole. When aneroid is installed, arm must be engaged between the two special washers (C).

Place aneroid in a tipped position as shown in Fig. 25 with the cap screw side of aneroid base resting on top of governor housing, and the stud side of base just started on studs. Straighten aneroid just enough to allow aneroid to be moved downward. Push firmly into place.

NOTE: If an attempt is made to install the aneroid straight down without first starting on an angle, the arm will be pushed down by the lower special washer. In addition, if the end of arm is positioned too high or too low, the arm will not engage between the washers.

Fasten aneroid to governor housing and install lead seal wire through the two cap screws (Fig. 22).

Connect the manifold pressure pipe. Install fuel shut-off cable. Adjust cable according to instructions given in Group 20 of this section.

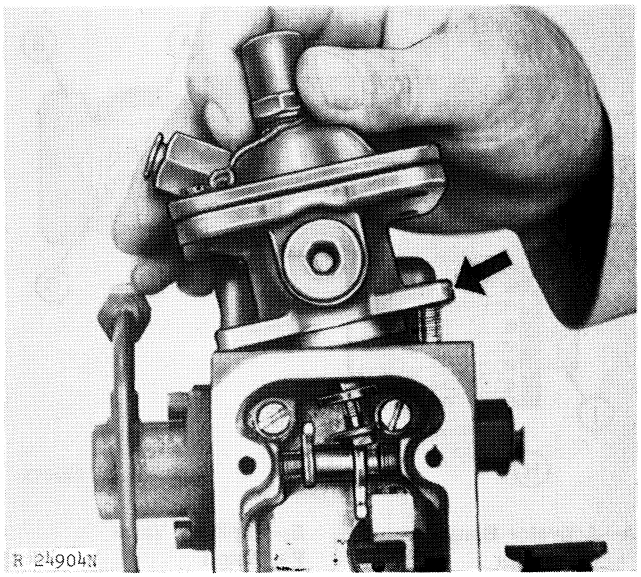

Fig. 25-Installing Aneroid (Governor Cover Removed For Illustration Purposes)

Start engine and check aneroid operation by accelerating the engine. If there is heavy smoke during acceleration, the aneroid may not be engaged with arm on starting fuel control shaft. Remove aneroid and reinstall using instructions just given.

HYDRAULIC ANEROID ACTIVATOR

General Information

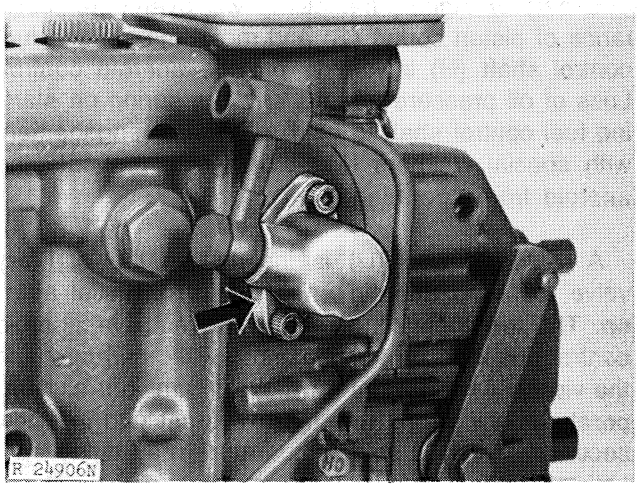

Fig. 26-Hydraulic Aneroid Activator

Model 8430 Tractors having Engine Serial No. 009834R-) and Model 8630 Tractors having Engine Serial No. 010697R-) are equipped with a hydraulic aneroid activator (Fig. 26). The hydraulic activator eliminates the need for mechanical linkages used previously for aneroid control.

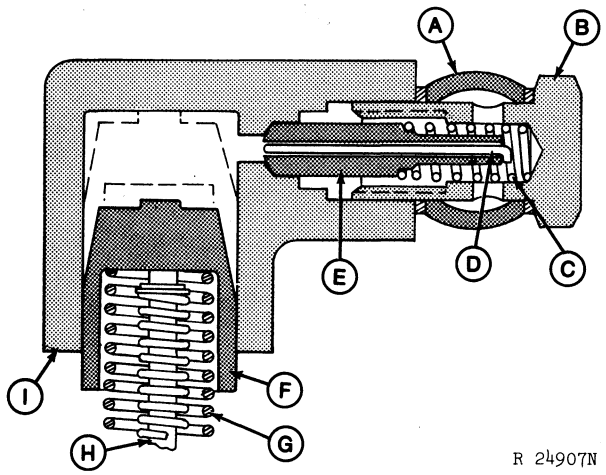

A—Activator Banjo Connector
B—Special Screw
C—Capillary Valve Spring
D—Restrictor Wire
E—Capillary Valve
F—Piston
G—Piston Spring
H—Starting Fuel Control Shaft
I —Activator Housing

Fig. 27-Cross-Sectional View of Hydraulic Aneroid Activator

Engine oil upon starting the engine is routed to the aneroid activator housing (I, Fig. 27) through a banjo connector (A), special screw (B), and an orifice in the capillary valve (E) to head of piston (F).

Whenever the engine oil pressure is about 9 psi (0.6 bar) or higher, the piston will overcome resistance of piston spring (G) and move the starting fuel control shaft (H) inward to provide aneroid control. Loss of oil pressure permits a return spring on starting fuel control shaft to hold arm out of engagement with special washers (Fig. 25), which prevents the aneroid from operating.

A restrictor wire (D) is inserted in the capillary valve to retard aneroid engagement on initial start-up. The length of time required to achieve aneroid control depends on the ambient air temperature and the viscosity of the motor oil. Warm ambient air temperatures will permit the aneroid to activate in a few seconds, whereas cold temperature may delay activation for several minutes.

An additional function of the restrictor wire is to help maintain an open passage in the capillary valve. Oil pressure action moves the wire sufficiently to prevent possible plugging.

Removal

Remove injection pump. See "Removal", page 15-6.

Take out special screw (B, Fig. 27) and remove the lubrication pipe.

Remove two Allen screws (B) which secure activator housing to governor housing. Pull off activator housing.

Remove capillary valve with spring and restrictor wire (Fig. 27). Also remove piston and spring from activator housing.

Repair

Wash parts in solvent and dry with compressed air. Blow out all passages to make sure that they are open. Be careful not to lose restrictor wire (Fig. 27).

Check piston and activator housing for general condition. Piston must move freely in it's bore. Piston spring and capillary valve spring should not be weak or broken. Replace parts as required.

Installation

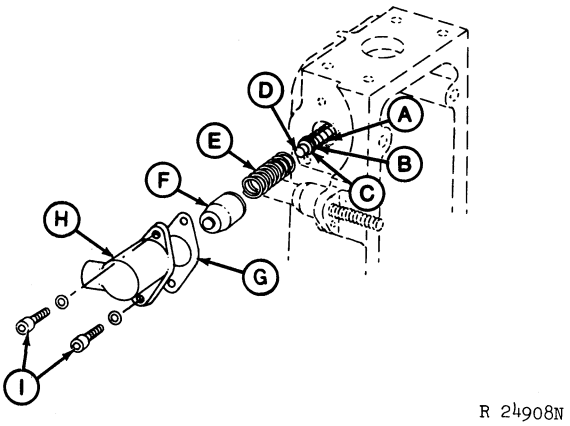

A—Return Spring
B—Washer
C—Retaining Ring
D—Starting Fuel Control Shaft
E—Piston Spring
F—Piston
G—Gasket
H—Activator Housing
I —Mounting Screws

Fig. 28-Exploded View Of Activator Parts

Installation—Continued

Before installing activator on governor housing, check the starting fuel control shaft (D, Fig. 28) to make sure that it is held all the way out by the return spring (A).

Clean mounting surfaces on governor housing and activator housing (H) so that gasket (G) will seal to prevent oil seepage.

Insert piston (F) and piston spring (E) into bore of activator housing, and install activator using a new gasket.

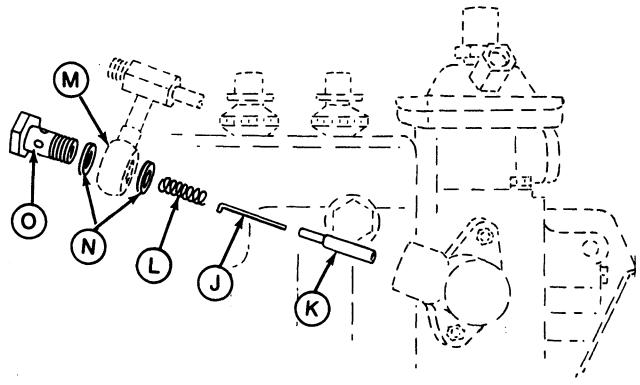

R 24909N

J—Restrictor Wire
K—Capillary Valve
L—Spring
M—Banjo Connector
N—Copper Washers
O—Special Screw

Fig. 29-Installing Lubrication Pipe

Insert restrictor wire (J, Fig. 29) in orifice of capillary valve (K) and position in activator housing. Slip spring (L) over valve.

Fasten lubrication pipe to activator housing. Use new copper washers (N) on both sides of banjo connector (M), and secure with special screw (O). Tighten screw to 10 ft-lbs (14 Nm) torque.

Install injection pump on engine. (See"Installation", page 15-8.)

OVERFLOW VALVE

General Information

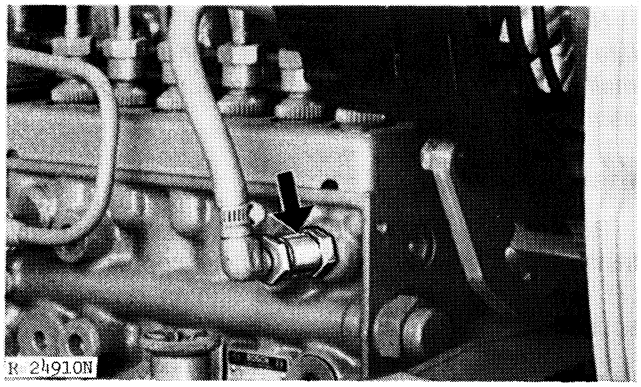

Fig. 30-Overflow Valve

An overflow valve (Fig. 30) is used at the fuel return outlet on the injection pump to maintain a housing pressure of approximately 15 psi (1 bar). Valve malfunctioning can cause a loss of power.

REMOVAL AND REPAIR

Disconnect the leak-off hose at elbow fitting. Unscrew valve from pump.

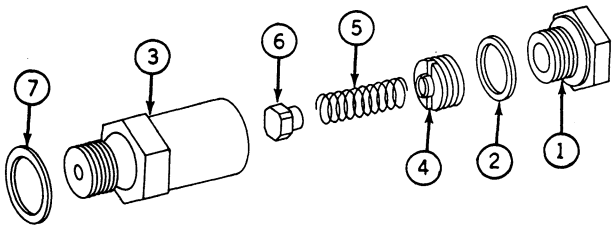

R 24911N

1—Reducer
2—Washer
3—Valve Body
4—Spring Seat
5—Spring
6—Valve
7—Washer

Fig. 31-Exploded View of Overflow Valve

Remove reducer (1, Fig. 31) with copper washer (2) from valve body (3). Unscrew spring seat (4) out of body, and remove spring (5) and valve (6).

Look for foreign material that may be in body or imbedded in seat of nylon valve. Check spring to see that it is not weak or broken.

Wash parts in solvent and air dry using compressed air. Make certain that no restrictions are present in valve body.

NOTE: There is no adjustment on valve to regulate housing pressure. If suspected that the valve is malfunctioning, replace valve to restore proper operation.

Installation

Reassemble valve. Tighten spring seat securely. Install valve on pump using a new copper washer (7). Connect leak-off hose and tighten hose clamp securely.

Bleed the fuel system.

FUEL INJECTION NOZZLES

General Information

Robert Bosch Model KDEL—21 mm injection nozzles are used on both tractor models. These nozzles are a multi-hole type with an inward opening valve (J, Fig. 32).

Fuel from the injection pump enters the injection nozzle (A) and passes through an edge-type filter (P). From the filter, fuel is directed through a drilled passage to the nozzle valve (J), nozzle orifices (I), and into the combustion chamber. Fuel leakage past the nozzle valve is used to lubricate the internal working parts and flows back through a drilled passage in the center of the nozzle body to the leak-off connection.

The edge-type filter prevents foreign material from plugging the orifices or damaging the nozzle assembly. Particles small enough to go through the filter will pass through the orifices without damage. This filter is pressed into the nozzle body and is non-serviceable.

For theory of operation, see Chapter 5 of FOS Manual 30—ENGINES.

Diagnosing Malfunctions

The fuel injection nozzles (Fig. 33) should not be removed from the engine as a routine maintenance procedure. Experience has shown that it is best to remove the assembly only after engine performance indicates that overhaul is necessary.

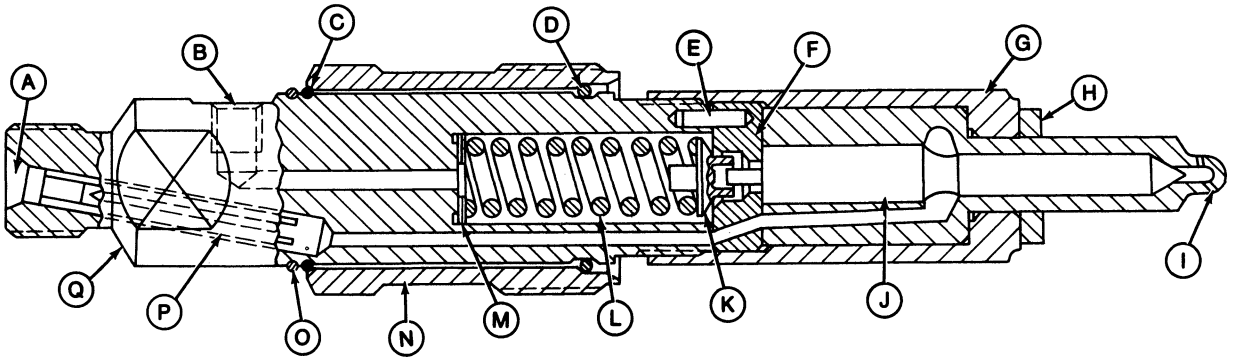

R 24912N

A—Fuel Inlet
B—Leak-Off Connection
C—O-Ring
D—Snap Ring
E—Dowel Pin
F—Intermediate Plate
G—Nozzle Retaining Nut
H—Washer
I—Nozzle
J—Valve
K—Spring Seat
L—Spring
M—Shims
N—Gland Nut
O—Snap Ring
P—Edge-Type Filter
Q—Nozzle Holder

Fig. 32-Cross-Sectional View of KDEL—21 mm Nozzle

Diagnosing Malfunctions—Continued

The following symptoms may indicate faulty nozzle performance:

Engine starts hard or won't start.
Erratic engine operation.
Engine idles poorly.
Engine does not develop full power.
Engine smokes excessively.

Removal

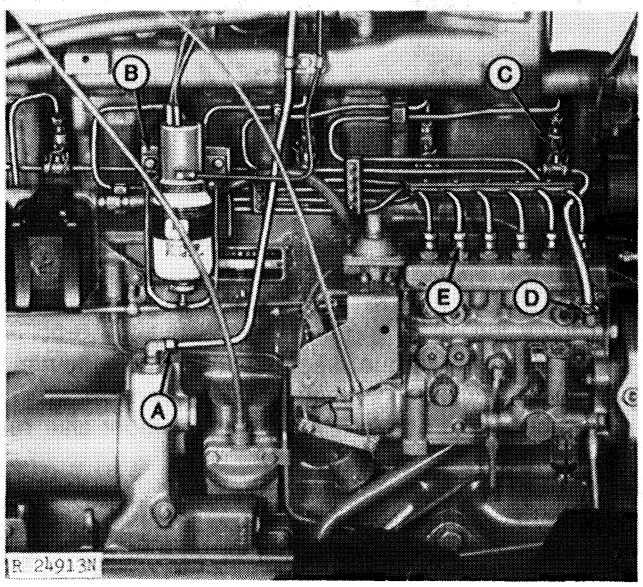

A—Lubrication Line
B—Ether Starting Aid and Bracket
C—Spring Clamps
D—Leak-Off Hose Connection
E—Fuel Pipes

Fig. 33-Fuel Injection Nozzle Removal (8630 Illustrated)

IMPORTANT: Disconnect battery ground cable before working on nozzles close to the alternator to prevent accidental short circuits through tools.

Thoroughly clean the side of engine involving the fuel system before disconnecting any portion of the system to prevent entry of dirt or other foreign material.

Disconnect the turbocharger lubrication line (A, Fig. 33) at oil filter body.

Remove the ether starting aid with bracket (B).

On 8430 Tractors, disconnect heater hoses and manifold pressure pipe at aneroid.

Disconnect the fuel pipes (E) at injection pump and injection nozzles. Remove pipes as an assembly.

On 8630 Tractors (E27980-), use JDF-22 Wrench to remove fuel injection pipes from injection nozzles.

Disconnect the leak-off hose (D) at injection pump. Remove spring clamp (C) from leak-off boot at injection nozzles. Disconnect leak-off pipe-to-hose spring clamp at rear of No. 6 nozzle. Remove leak-off boots and pipes from engine as an assembly.

Use a 15/16-in. (or 24 mm) deep socket on gland nut to remove nozzle. The gland nut will act as a jack screw to raise nozzle out of the cylinder head bore.

To prevent debris from entering the combustion chamber after nozzle has been removed, install a 1/2-in. (12.7 mm) tapered hardwood dowel in the nozzle bore.

Repair

IMPORTANT: Do not attempt to test or disassemble injection nozzles unless the proper service tools are available. TM-1065 "Fuel Injection Equipment—Robert Bosch" contains specifications, special service tools, and testing procedures necessary to service Robert Bosch injection nozzles.

Clean the nozzle with the specified BRASS brush. See "Special Tools." Clean nozzle gland nut with a wire brush.

IMPORTANT: Never use a steel brush to clean nozzles as this will distort the spray orifices.

Use a thread chaser made from a nozzle gland nut (See Special Tools) to clean threads in cylinder head. Blow debris out of nozzle cavity, and remove wood dowel from nozzle bore.

Inspect nozzle gasket seat in nozzle bore. If seat is not clean, use JDE-99 Tool (Fig. 34) to remove carbon from seat. Stop using tool when seat comes clean. Insert wood dowel in nozzle bore and blow out debris. Remove dowel.

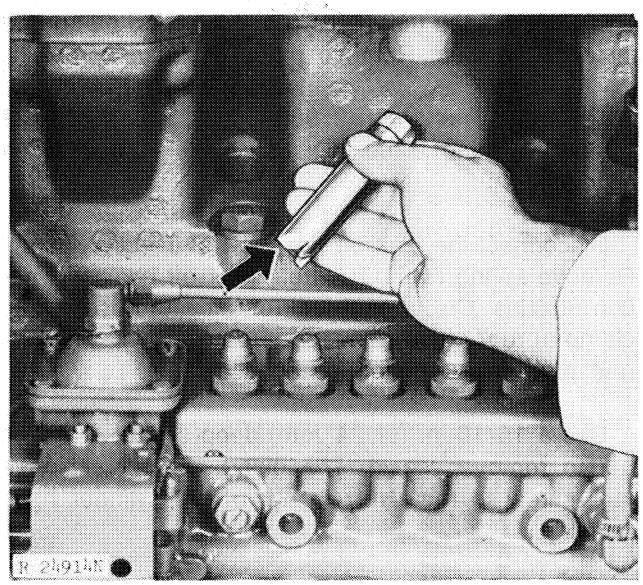

Fig. 34-JDE-99 Nozzle Seat Reamer (8630 Illustrated)

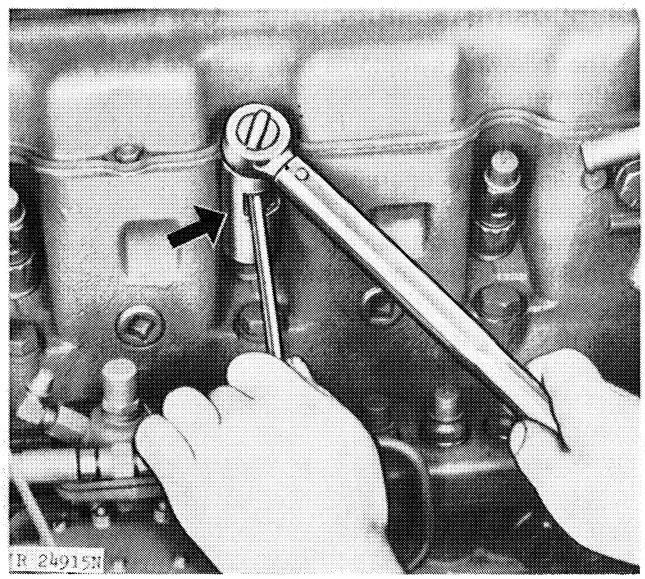

Fig. 35-Using JDE-92 Nozzle Wrench To Tighten Injection Nozzle (8430 Illustrated)

Installation

Coat nozzle barrel with high temperature grease, and apply Never-Seez to the gland nut threads. Install a new nozzle washer.

Replace nozzle gland nut O-ring (C, Fig. 32) if it is missing or shows deterioration, and slide into slot directly above gland nut.

Insert injection nozzle into nozzle bore. Use a 15/16-in. (or 24 mm) deep socket and turn gland nut down to remove most of the looseness.

Rotate nozzle body so that the hole for the leak-off connector is facing straight out from the cylinder head. Slip the inner socket of JDE-92 Nozzle Wrench (Fig. 35) over nozzle and engage with the two flats on nozzle body.

Position the outer socket portion of nozzle wrench on gland nut with socket "window" facing outward. Insert handle through window into the inner socket. Ball detent in handle will keep it secured to the inner socket. Also note that the handle simulates the position of the leak-off connector.

Tighten the injection nozzle gland nut to 55-65 ft-lbs (75-88 Nm) torque, keeping the handle pointing straight out while tightening. Socket window is cut deep enough to obtain a new "bite" without also removing the inner socket.

Screw leak-off connectors with washers on nozzle body and tighten securely. Install leak-off pipe and boot assembly, securing boots to leak-off connectors with spring clamps. Install leak-off hose on pump at front end and to pipe at rear end.

Install fuel pipes. Tighten connectors to 35 ft-lbs (47 Nm) torque.

Install ether starting aid with bracket. Connect turbocharger lubrication line. On 8430 Tractors, connect manifold pressure pipe and heater hoses.

Operate hand primer on fuel supply pump and bleed air from system. Start engine and finish bleeding system if required. Check connections for leaks.

Group 20
CONTROL LINKAGE

SPEED CONTROL LINKAGE
(Without Foot Throttle)

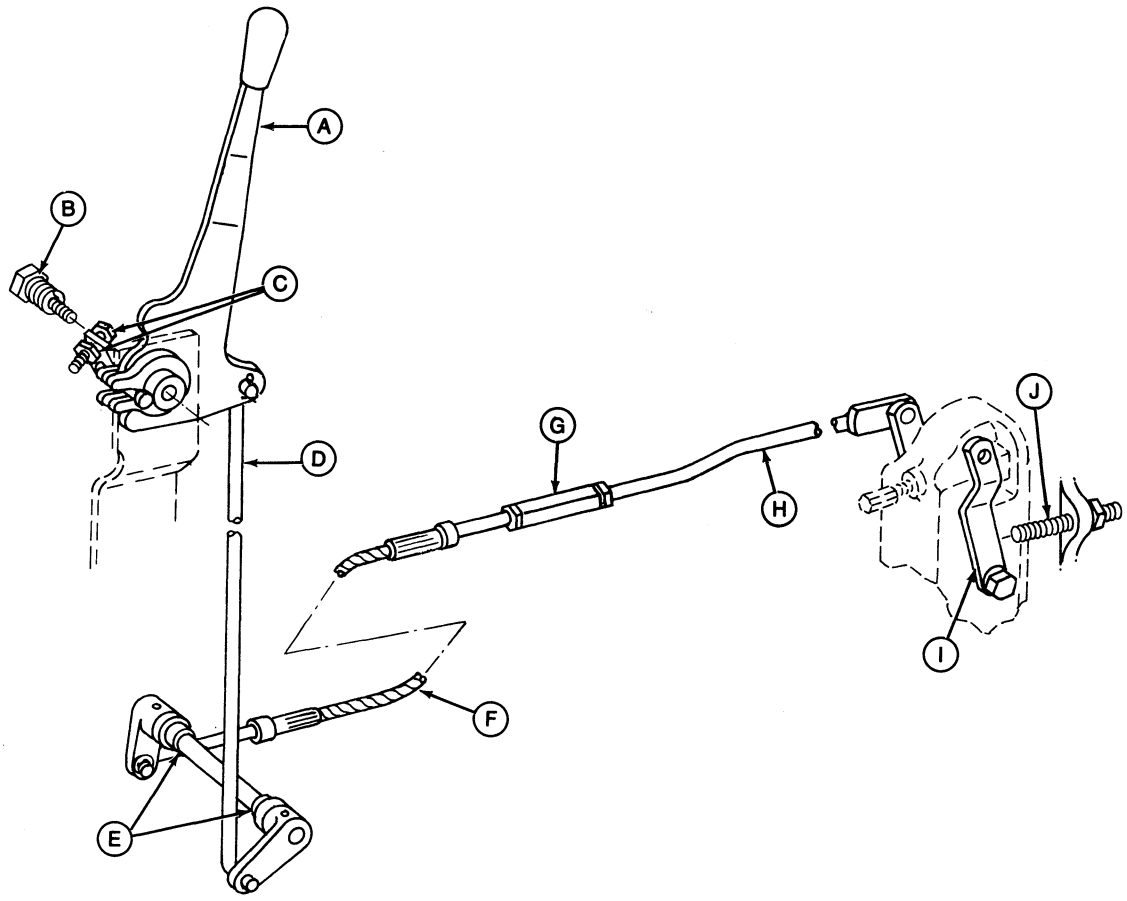

R 25027N

A—Lever
B—Lever Friction Spring Screw
C—Lever Stop Screw and Jam Nut
D—Vertical Control Rod
E—Bushings
F—Cable
G—Turnbuckle
H—Front Control Rod
I—Governor Control Lever
J—Fast Idle Stop Screw

Fig. 1-Speed Control Linkage (Without Foot Throttle)

General Information

The speed control lever (A, Fig. 1) is mounted in the console to the right of the operator. A rod and cable arrangement (D, F, and H) connects the speed control lever to the governor control lever (I).

A lever friction spring screw (B) regulates the amount of effort required to move the speed control lever, while the lever stop screw and jam nut (C) controls the slow idle speed. The fast idle stop screw (J) on the injection pump limits the fast idle speed.

NOTE: Fig. 1 illustrates the speed control linkage connected to the governor control lever on pumps without a hydraulic aneroid activator (Group 15). If the pump is equipped with a hydraulic activator, there will be only one governor control lever (the one which the rod connects to), and the fast idle stop screw will be on the opposite side of the governor cover to make contact with the control lever.

Litho in U.S.A.

Removal

Disconnect the front control rod (H, Fig. 1) at injection pump and at turnbuckle.

Remove the floor mat, floor panel, and foot rest panel from inside Sound-Gard Body. Disconnect cable (A, Fig. 2) from arm (B), and remove two cable clamps which support the cable at the front and rear. The front clamp is located just to the rear of the large hole in clutch housing flange that the cable goes through. Remove cable.

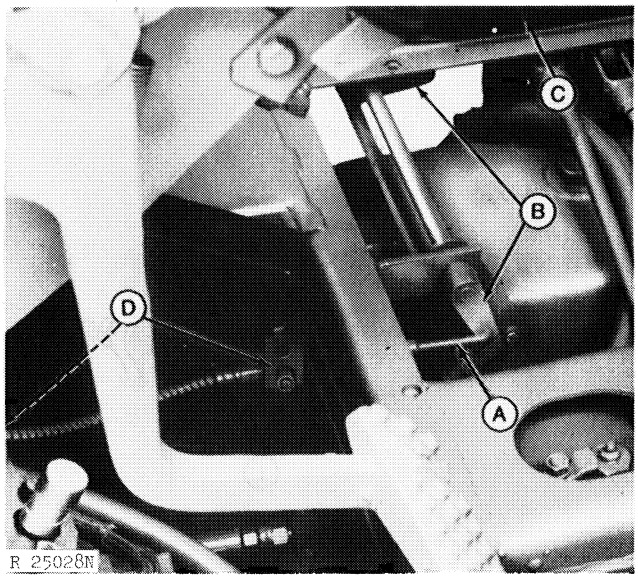

A—Cable **C—Console Cover**
B—Arms **D—Cable Clamps**

Fig. 2-Cable Removal

Remove the console cover (C) to gain access to the vertical control rod and speed control lever mounting. To remove the cover, the outer right-hand Sound-Gard Body panel must first be removed. See Section 80 for console cover removal instructions.

Disconnect the vertical control rod (E, Fig. 3) from the speed control lever (G) and outer cross-shaft arm.

Remove lever cap screw (F), retainer, spring, and friction plates with facings. Remove lever.

The inner and outer arms on cross-shaft shown in Figs. 1 and 2 may be removed by driving out the spring pin that secures the arm to the shaft. Remove bushings and shaft.

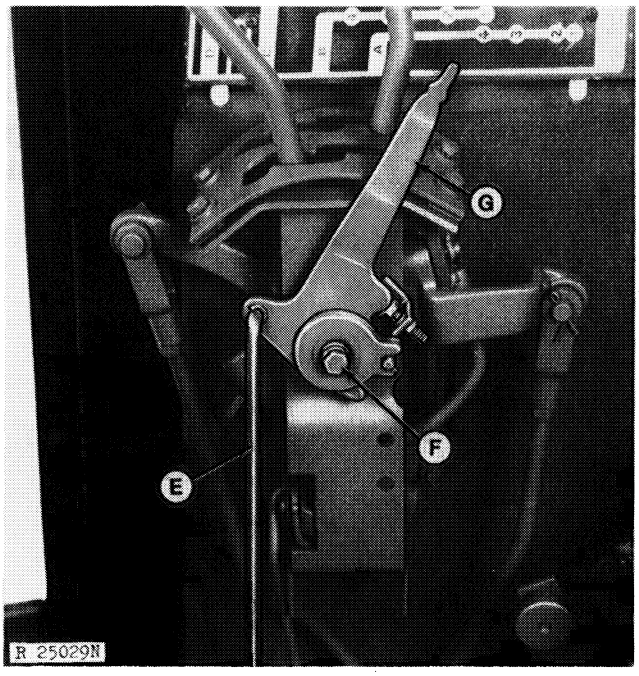

E—Control Rod **F—Friction Spring Screw** **G—Lever**

Fig. 3-Speed Control Lever

Installation and Adjustment

Use Fig. 1 as a guide for installing the speed control linkage.

After completing the installation, check the linkage for correct adjustment. Bring engine to operating temperature and install JDE-28 Speed Indicator Adapter (illustrated in Fig. 18, Group 15 of this section). Using an accurate master tachometer, follow these instructions:

1. Adjust the speed control lever friction spring screw until an 8 lb. (35.6 N) force at the end of the lever is required to move the speed control lever.

2. Move the speed control lever forward until the lever stops. Adjust the turnbuckle (G, Fig. 1) until the governor control lever contacts the fast idle stop screw. Then adjust the turnbuckle an additional 1-1/2 turns (to lengthen rod).

NOTE: The injection pump fast idle stop screw should limit engine speed to 2225-2325 rpm. If not, adjust the injection pump on a test stand as specified in TM-1065 "Fuel Injection Equipment—Bosch."

3. Move the speed control lever rearward until 780-820 rpm engine speed is obtained. Adjust the lever stop screw until head of screw contacts the speed control lever, and tighten jam nut.

FOOT THROTTLE LINKAGE

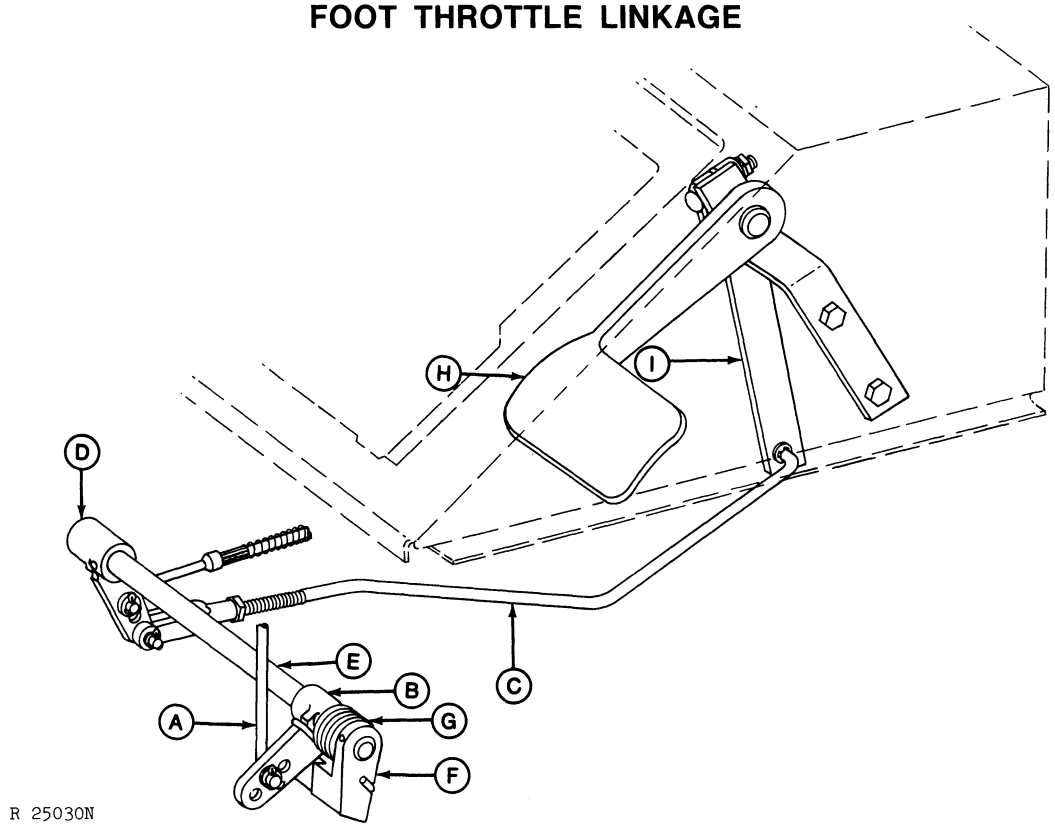

A—Vertical Control Rod
B—Outer Arm
C—Rear Control Rod
D—Inner Arm
E—Arm Shaft
F—Shaft Arm
G—Spring
H—Pedal
I—Pedal Arm
J—Bushings

Fig. 4-Foot Throttle Linkage

Removal

Remove the floor mat, floor panel, and foot rest panel from inside Sound Gard Body. (See Group 5, Section 80.)

Disconnect the vertical control rod (A, Fig. 4) from outer arm (B). Remove rear control rod (C). Disconnect the control cable from inner arm (D).

To remove the speed control arm shaft (E), drive out the spring pin securing inner arm to shaft. Drive out spring pin securing speed shaft arm (F) to shaft. Remove arms from shaft, and pull out shaft. Remove spring (G) to separate arms. Remove bushings.

The foot pedal (H) may be removed from the control support by loosening round head bolt on pedal arm (I). Pull out pedal from control support. Remove bushings.

Installation and Adjustment

Insert shaft (E) into platform support, with end of shaft having hole farthest from the end facing toward middle of tractor. Position nylon bushings on shaft so that large shoulder of bushing will be against the inner and outer arms.

Install inner arm (D) on shaft with large shoulder toward the outside, and secure with spring pin. Install spring (G) on outer arm (B) and shaft arm (F). Make sure that ends of spring are in their respective notches. Insert outer arm assembly into position and push shaft through outer bushing and through the outer arm assembly. Secure shaft arm to shaft with spring pin.

Install the rear control rod (C). Yoke-end of rod connects to bottom hole of inner arm. Connect control cable to the upper hole. Install cotter pins. Place end of vertical control rod (A) in middle hole of outer arm and retain with cotter pin.

Installation and Adjustment—Continued

Check the foot throttle linkage adjustment before completing the installation. To check the adjustment, move the hand speed control lever all the way forward to the fast idle position. The clearance between bottom of foot pedal and floor should be 1/4-inch (6.4 mm). If not, adjust yoke on rear control rod to obtain the correct adjustment.

Complete the installation by checking all connections to see that they are secured, and installing floor panels and floor mat.

STARTING FUEL CONTROL LINKAGE

1—Collar
2—Spring
3—Swivel
4—Cotter Pin
5—Washers
6—Control Rod
7—Collar
8—Pin
9—Spacers
10—Latch
11—Washers
12—Cotter Pin
13—Bell Crank
14—Cotter Pin
15—Spring Pin
16—Lever Arm
17—Washer
18—Machine Screw
19—Control Cable
20—Collar

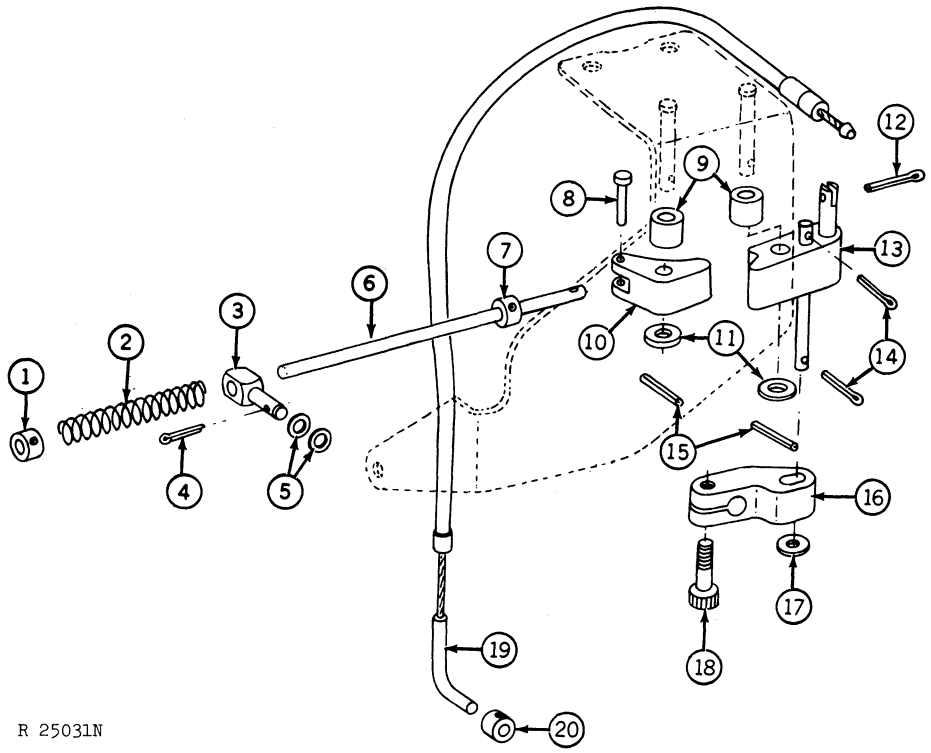

Fig. 5-Starting Fuel Control Linkage (Exploded View)

General Information

The starting fuel control linkage automatically disengages the aneroid when the fuel shut-off cable is pulled to stop the engine, and automatically engages the aneroid when the engine is running. Disengaging the aneroid from the injection pump control rack permits the rack to move all the way forward to provide fuel delivery quantities sufficient to start the engine.

NOTE: Late model tractors are equipped with a Hydraulic Aneroid Activator. On these tractors, there is no external starting fuel control linkage since the activator performs the same function by utilizing engine oil pressure to activate or deactivate the aneroid. (See Group 15.)

As the fuel shut-off lever is pulled upward by the shut-off cable, the starting fuel control cable (19, Fig. 5) is pulled downward. In doing so, the bell crank (13) moves the lever arm (16), which is clamped to the starting fuel control shaft, inward. Inward movement of the shaft disengages the aneroid from the injection pump control rack.

At the same time, the bell crank is held from returning to its normal position by the latch (10). A spring (2) is used to aid the engagement of the latch with the bell crank.

The bell crank is disengaged from the latch when the engine is running at a speed fast enough to cause the governor control lever to contact the collar (7) and release the bell crank. Movement of the bell crank forces the lever arm (and starting fuel control shaft) to move outward, thereby engaging the aneroid.

Removal

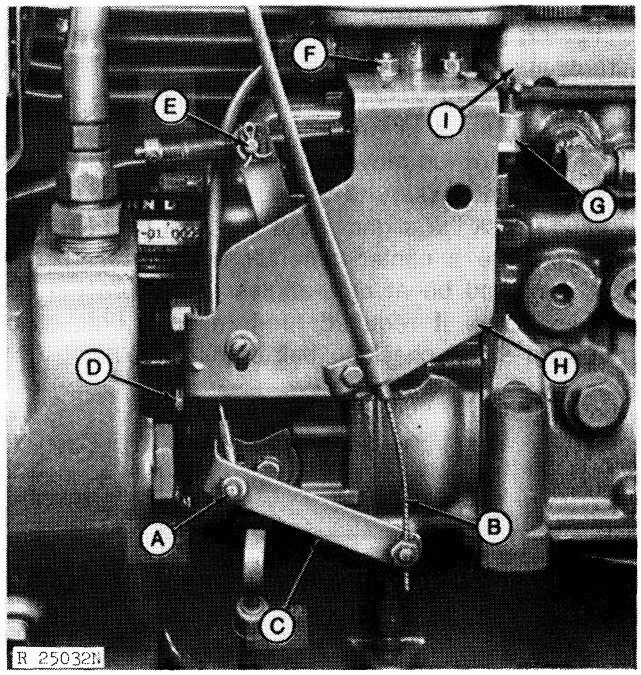

A—Control Cable
B—Shut-Off Cable
C—Shut-Off Lever
D—Rear Cap Screw
E—Swivel
F—Stud Nuts
G—Bell Crank
H—Bracket
I—Cover

Fig. 6-Bracket and Linkage Assembly

NOTE: On 8430 Tractors Only - The engine oil filter body must be removed to gain access to the rear cap screw (D, Fig. 6). (See Fig. 14 in Group 15 of this section.)

Disconnect the starting fuel control cable (A, Fig. 6) and fuel shut-off cable (B) from the shut-off lever (C) and from bracket (H).

Disconnect the swivel from the governor control lever. Remove pump housing cover screws and move cover (I) forward far enough to permit control cable to be removed from between cover and aneroid.

Loosen screw which clamps the lever arm to the starting fuel control shaft. If desired, the lever arm may be left on the starting fuel control shaft. To make the separation, remove the cotter pin and washer from bell crank pin which goes through the lever arm at front.

Remove the two bell crank bracket-to-aneroid housing stud nuts and rear cap screw securing the bracket to rear of governor housing.

Disengage the lever arm from starting fuel control shaft as the assembly is removed from the pump. Or, if lever arm was left on control shaft, disengage bell crank shaft from lever arm, and remove assembly from pump.

Disassembly and Assembly

Use Figs. 5 and 7 as a guide for disassembly and assembly of parts. Replace parts as required.

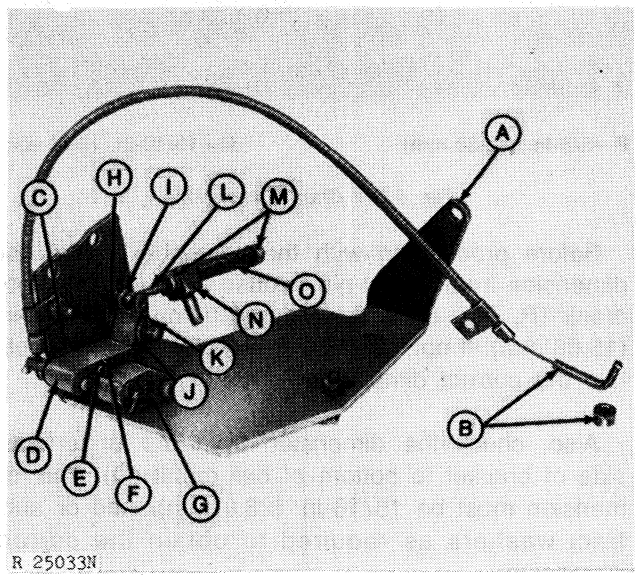

A—Bracket
B—Control Cable and Collar
C—Spacer
D—Bell Crank
E—Washer
F—Spring Pin
G—Lever Arm
H—Spacer
I—Latch
J—Washer
K—Spring Pin
L—Control Rod
M—Collar
N—Swivel
O—Spring

Fig. 7-Assembled View of Starting Fuel Control Linkage

Disassembly and Assembly—Continued

Assemble spacer (C, Fig. 7) and bell crank (D) on front pivot pin. Retain with washer (E) and spring pin (F).

Attach cable clamp (ball-end) to under side of bracket (A) and insert cable in slot of bell crank pin. Secure with cotter pin.

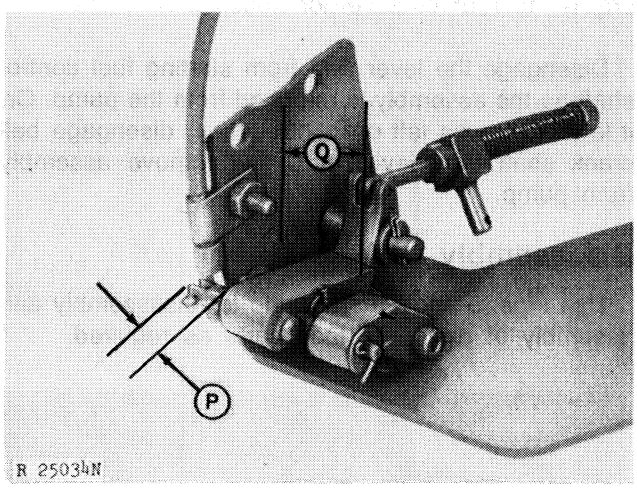

P—5/8-in. (15.88 mm) **Q—15/16-in. (23.8 mm)**

Fig. 8-Bell Crank Dimensions

Before proceeding with the assembly, check the dimension from top of pin (slotted end) to top of bell crank (P, Fig. 8). This dimension must be 5/8-in. (15.88 mm). If not, carefully press pin in or out to obtain the correct dimension.

Also, check the dimension from the underneath side of bracket to bottom of bell crank (Q). This dimension must be 15/16-in. (23.8 mm). Add or subtract washers as required to obtain the correct dimension.

Install latch (I) with control rod (L), and spacer (H) assembly to rear pivot pin. Retain with washer (J) and spring pin (K). Slip front collar (M), swivel (N), spring (O), and rear collar (M) on control rod. Tighten set screw on rear collar.

If lever arm (G) was removed from the starting fuel control shaft, install on bell crank pin, and retain with washer and cotter pin.

Installation

Install bell crank bracket over the aneroid studs, and at the same time install the lever arm on the starting fuel control shaft, or engage bell crank pin in lever arm and secure with washer and cotter pin.

Rotate the fuel shut-off lever to the shut-off position to permit the starting fuel control shaft to move to its outermost position (aneroid engaged).

Fasten bell crank bracket on housing. Check bell crank and latch engagement for binding. If binding occurs, loosen bracket slightly, and retighten. Also try moving lever arm on fuel control shaft in or out slightly to free-up movement. Should binding persist, it may be necessary to remove the bracket (A, Fig. 9) and check the alignment of the pivot pins (D). Pins should have a center-to-center spacing of 1.22 in. (31 mm) and be at right-angles to the bracket (B). Realign pins, if required, and reinstall bracket on housing, again checking bell crank for binding.

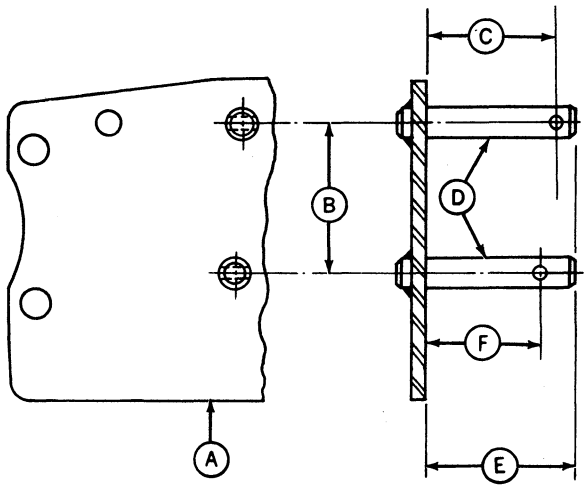

A—Bracket **D—Pivot Pins**
B—1.22 in. (31 mm) **E—1.18 in. (30 mm)**
C—1.02 in. (26 mm) **F—0.96 in. (24.5 mm)**

Fig. 9-Bell Crank Bracket Pivot Pins

Insert swivel in governor lever and retain with a washer and cotter pin.

Install control cable in fuel shut-off lever, and secure with collar. Connect the fuel shut-off cable to the shut-off lever. Adjust cable according to the instructions given on page 20-7.

Complete installation by checking all connections to make sure they are properly secured. On 8430 Tractor, reinstall oil filter body on engine (see Group 15).

Litho in U.S.A.

Adjustment

Pull the fuel shut-off knob all the way out and check the shut-off lever to make sure that it has moved all the way back.

Push the shut-off knob all the way in. The bell crank should be latched. If not, recheck the installation to determine cause for not latching. (See page 20-6.)

With the bell crank still in latched position, move the governor control lever (A, Fig. 10) forward until there is 0.09-0.11 in. (2.3-2.8 mm) clearance (C) between the control lever and fast idle stop screw (B). Move the front collar against the swivel, and tighten set screw.

To check the adjustment, push the speed control forward until the governor control lever contacts the collar. The latch should trip to allow the bell crank to rotate for aneroid control.

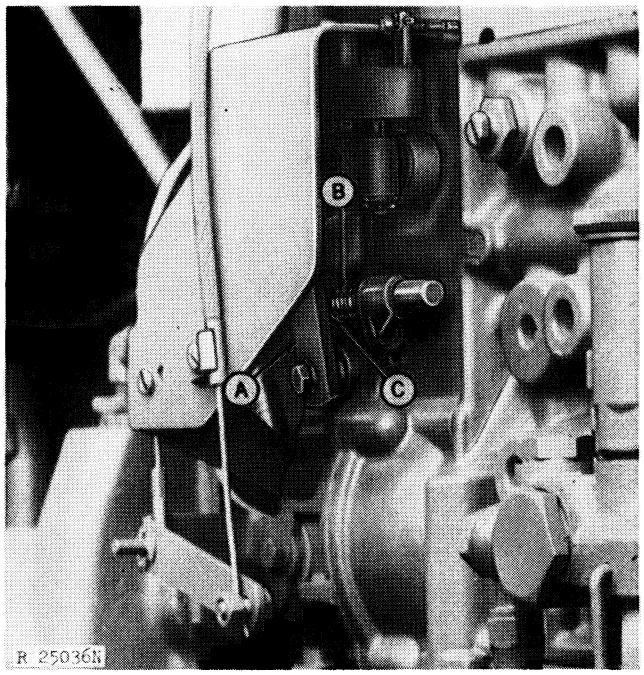

A—Control Lever
B—Stop Screw
C—0.10 in. (2.54 mm) Clearance

Fig. 10-Positioning Control Lever

DIESEL FUEL SHUT-OFF CONTROL

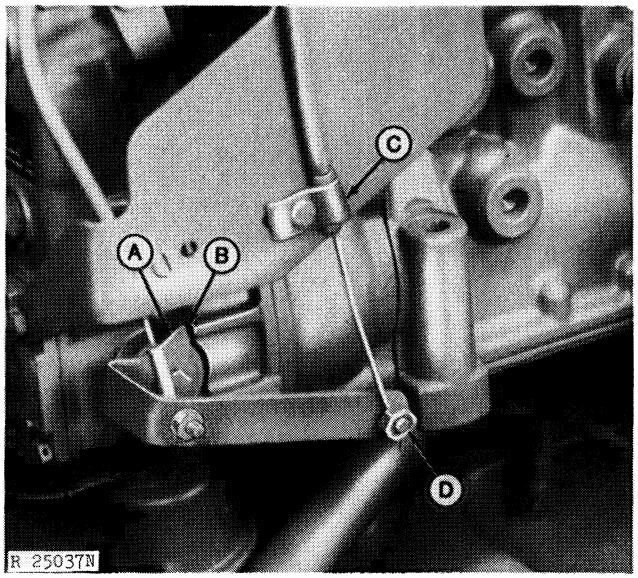

A—Shut-Off Lever
B—Stop
C—Clamp
D—Lock Screw

Fig. 11-Fuel Shut-Off Control

A manually operated cable control operates the shut-off lever (A, Fig. 11) on the injection pump.

To adjust the fuel shut-off control, loosen the lock screw (D) on the shut-off lever. With the cable control knob pushed all the way in, rotate pump shut-off lever forward against its stop (B). Remove slack in cable and tighten lock screw. Make sure cable housing clamp (C) is tight.

IMPORTANT: An improperly adjusted control cable can restrict the injection pump control rack travel, preventing the rack from moving forward (increasing fuel delivery) as far as it should. If so, the engine may not develop full horsepower.

Litho in U.S.A.

Group 25
SPECIFICATIONS AND SPECIAL TOOLS

SPECIFICATIONS

Item	Specification

Air Intake System

Aspirator

Aspirator vacuum at 2100 rpm (full load) ..... 12 in. (29.9 mbar) water (minimum)

Air cleaner

Air intake vacuum at 2100 engine rpm (full load) with new filter elements and
Without extension
8430 Tractor ..... 6-1/2 in. (16.2 mbar)
8630 Tractor ..... 10 in. (24.9 mbar)
Maximum permitted reading ..... 25 in. (62.3 mbar) water
Restriction required to activate indicator lamp ..... 24-26 in. (59.8-64.8 mbar) water

	New Part Dimension	Wear Tolerance
Turbochargers (8430 Tractor)		
AiResearch T-04B23		
Total indicator reading limits		
Bearing clearance	0.003-0.006 in. (0.08-0.15 mm)	
Bearing end play	0.001-0.004 in. (0.03-0.10 mm)	
Center housing		
Bearing bore I.D.	0.6220-0.6223 in. (15.799-15.805 mm)	0.6228 in. (15.819 mm)
Seal bore I.D.	0.699-0.701 in. (17.75-17.81 mm)	0.703 in. (17.86 mm)
Turbine shaft wheel		
Journal O.D.	0.3997-0.4000 in. (10.152-10.161 mm)	0.3994 in. (10.145 mm)
Seal hub O.D.	0.682-0.683 in. (17.32-17.35 mm)	0.0.681 in. (17.30 mm)
Back plate		
Seal bore I.D.	0.4995-0.5005 in. (12.687-12.713 mm)	0.5010 in. (12.725 mm)
Thrust collar		
Washer groove width	0.1740-0.1748 in. (4.420-4.440 mm)	0.1752 in. (4.450 mm)
Ring groove width	0.064-0.065 in. (1.63-1.65 mm)	0.066 in. (1.68 mm)
Thrust washer thickness	0.1716-0.1720 in. (4.359-4.369 mm)	----
Journal bearing		
O.D.	0.6182-0.6187 in. (15.702-15.715 mm)	----
I.D.	0.4010-0.4014 in. (10.185-10.196 mm)	----
Compressor wheel bore I.D.	0.2498-0.2501 in. (6.345-6.353 mm)	0.3504 in. (6.360 mm)
Turbine shaft wheel		
Ring groove width	0.0645-0.0685 in. (1.638-1.740 mm)	0.0735 in. (1.867 mm)
Shaft elongation	0.0055-0.0065 in. (0.140-0.165 mm)	----
Exhaust adapter end play (minimum)	1/16 in. (1.59 mm)	
Torque		
Compressor wheel nut	18-20 in-lbs. (2.03-2.26 Nm)	(Then tighten additional 90°)
Back plate-to-compressor Housing	110-130 in-lbs. (12.43-14.69 Nm)	
Back plate-to-center housing	75-90 in-lbs. (8.48-10.17 Nm)	
Turbine housing-to-center housing	100-130 in-lbs. (11.30-14.69 Nm)	

Litho in U.S.A.

SPECIFICATIONS (Continued)

Item	Specification

Air Intake System—Continued

Schwitzer 3LM	
Total indicator reading limits	
Bearing clearance	0.021 in. (0.53 mm)
Bearing end play	0.002-0.005 in. (0.05-0.13 mm)
Piston ring groove width	0.064-0.065 in. (1.63-1.65 mm)
Thrust bearing thickness	0.107-0.108 in. (2.72-2.74 mm)
Thrust sleeve length	0.517-0.519 in. (13.13-13.18 mm)
Shaft diameter at	
Bearing	0.4400-0.4403 in. (11.176-11.184 mm)
Compressor wheel	0.3123-0.3125 in. (7.930-7.938 mm)
Bearing housing bore	0.7500-0.7505 in. (19.050-19.063 mm)
Bearing length	2.425-2.426 in. (61.59-61.62 mm)
Shaft bearing area length	2.536-2.537 in. (64.41-64.44 mm)
Compressor wheel lock nut	156 in-lbs. (18 Nm) torque
Lock plate screws (compressor and turbine)	60 in-lbs. (6.8 Nm) torque

Measurement	New Part Dimension	Wear Tolerance
Turbochargers (8630)		
AiResearch TV-6102		
Total indicator reading limits		
Bearing clearance	0.003-0.006 in. (0.08-0.15 mm)	
Bearing end play	0.003-0.010 in. (0.08-0.25 mm)	
Impeller heating temperature	325-360°F (163-182°C)	
Center housing		
Bearing bore I.D.	0.982-0.983 in. (24.94-24.97 mm)	0.985 in. (25.02 mm)
Seal bore I.D.	0.822-0.824 in. (20.88-20.93 mm)	0.825 in. (20.96 mm)
Turbine shaft wheel		
Journal O.D.	0.6250-0.6254 in. (15.875-15.890 mm)	0.6245 in. (15.85 mm)
Seal hub O.D.	0. -0. in. (mm)	0. in. (mm)
Ring groove O.D.	0.688-0.702 in. (17.47-17.83 mm)	0.687 in. (17.45 mm)
Ring groove width	0.068-0.072 in. (1.73-1.83 mm)	0.074 in. (1.88 mm)
Wheel tip thickness		0.025 in. (0.64 mm)
Backplate seal bore I.D.	0.6875-0.6885 in. (17.463-17.488 mm)	0.6895 in. (17.51 mm)
Thrust collar bore I.D.	0.3137-0.3141 in. (7.986-7.978 mm)	0.316 in. (8.03 mm)
Thrust collar thickness	0.299-0.300 in. (7.59-7.62 mm)	0.297 in. (7.54 mm)
Thrust spacer O.D.	0.6715-0.6725 in. (17.056-17.082 mm)	0.670 in. (17.02 mm)
Thrust spacer ring groove width	0.0685-0.0695 in. (1.740-1.765 mm)	0.0715 in. (1.88 mm)
Compressor wheel bore I.D.	0.3121-0.3124 in. (7.927-8.413 mm)	0.3750 in. (9.53 mm)
Turbine shaft elongation	0.009-0.010 in. (0.23-0.25 mm)	
Turbine wheel-to-wheel shroud clearance		
Thrust toward compressor end	0.025-0.052 in. (0.64-1.32 mm)	
Thrust toward turbine end	0.034-0.055 in. (0.86-1.40 mm)	
Torque		
Backplate-to-center housing	80-100 in-lbs. (9-11 Nm)	
V-band clamp (compressor end)	110-130 in-lbs. (12-15 Nm)	
V-band clamp (turbine end)	160 in-lbs. (18 Nm) initial; looseen and retighten to 110-130 in-lbs. (12-15 Nm)	

Item	Specification

Air Intake System—Continued

Schwitzer 4LE-302

Total indicator reading limits	
Bearing clearance	0.035 in. (0.89 mm)
Bearing end play	0.003-0.006 in. (0.08-0.15 mm)
Piston ring groove width	0.066-0.068 in. (1.68-1.73 mm)
Thrust ring thickness	0.100-0.101 in. (2.54-2.57 mm)
Thrust bearing thickness	0.210-0.212 in. (5.33-5.39 mm)
Spacer sleeve thickness	0.215-0.216 in. (5.46-5.49 mm)
Flinger thickness	0.405-0.406 in. (10.29-10.31 mm)
Bearing length	0.500-0.505 in. (12.70-12.83 mm)
Shaft diameter	0.5612-0.5615 in. (14.254-14.262 mm)
Bearing housing bore	0.8762-0.8767 in. (22.255-22.268 mm)
Shaft shoulder length	3.117-3.121 in. (79.17-79.27 mm)
Compressor wheel lock nut torque	14-16 ft-lbs. (19-22 Nm)
Clamp bands (compressor and turbine) torque	10 ft-lbs. (14 Nm)

Intercooler and Intake Manifold (8430 Tractor)

Manifold pressure at 2100 engine rpm (full load)	18-23 psi (1.2-1.6 bar)
Intercooler cover-to-intake manifold	30-40 ft-lbs (41-54 Nm) torque
Intake manifold-to-cylinder head	35 ft-lbs (47 Nm) torque

Intercooler and Intake Manifold (8630 Tractor)

Manifold pressure at 2100 engine rpm (full load)	20-24 psi (1.4-1.7 bar)
Intercooler cover-to-intake manifold	30-40 ft-lbs (41-54 Nm) torque
Intake manifold-to-cylinder head	50-60 ft-lbs (68-81 Nm) torque

Ether Starting Aid

Spray nozzle orifice	0.020 in. (0.51 mm)
Voltage to energize solenoid	4 volts

Diesel Fuel System

Fuel Tanks

Capacity (each tank)	78 U.S. gal. (295 l)

Fuel Gauge Sender

Float in empty position	0-0.5 ohms
Float in full position	88-92 ohms

Fuel Supply Pump—Model FP/K22P26

Normal operating pressure	Approx. 20-25 psi (1-2 bar)
Mounting stud nuts	4-5 ft-lbs (5-7 Nm) torque

Fuel Injection Pump—Model PES6P

Timing to engine	TDC
Fast idle speed	2225-2325 rpm
Full load speed	2100 rpm
Slow idle speed	780-820 rpm
Injection pump-to-engine stud nuts	35 ft-lbs (47 Nm) torque
Drive gear-to-hub cap screws	35 ft-lbs (47 Nm) torque
Crankcase oil capacity	3/4 U.S. pint (0.35 l)
Overflow valve regulating pressure	Approximately 15 psi (1 bar)

Litho in U.S.A.

SPECIFICATIONS—Continued

Item	Specification
Diesel Fuel System—Continued	
Aneroid	
Hydraulic activator operating pressure	7-11 psi (0.5-1 bar)
Fuel Injection Nozzles—Model KDEL-21 mm	
Fuel pipe connectors	35 ft-lbs (47 Nm) torque
Nozzle gland nut	55-65 ft-lbs (74-88 Nm) torque
Control Linkage	
Speed Control Linkage	
Force to move hand throttle	8 lbs. (3.63 kg)
Foot throttle pedal position at fast idle	1/4-in. (6.4 mm) above floor mat
Starting Fuel Control Linkage	
Bell crank bracket pivot pins (center-to-center)	1.22 in. (31 mm)
Governor control lever-to-fast idle stop screw clearance	0.009-0.11 (2.29-2.82 mm); collar locked against swivel
Diesel Fuel Shut-Off Control	
Fuel shut-off lever and cable	Lever against stop in "run" position; slack removed from cable

SPECIAL TOOLS

No.	Name	Use
D-05022ST*	Water Vacuum Gauge and Fittings	Measure air intake restriction
***	Turbine Wheel Holding Fixture (AiResearch Turbocharger)	Hold turbine wheel for removal and installation of shaft nut.
JDE-28*	Speed Indicator Adapter	Obtain accurate engine rpm reading (use with tachometer)
JDE-81-1*	Engine Turning Tool	Timing injection pump to engine
JDE-81-4*	Timing Pin	Used in conjunction with JDE-81-1 to time injection pump
JDE-90*	Open Serrated Wrench	Used to keep delivery valve holder from turning while removing and installing fuel pipes.
JDE-92*	Nozzle Wrench	Installing injection nozzles
JDE-99*	Nozzle Seat Reamer	Removing carbon from nozzle gasket seat
16488*	Brass Wire Brush	Clean nozzles
CS-2428*	Line wrench - 3/4 in. (19 mm)	Loosening & tightening injection nozzle fuel pipe connectors
**	Thread Chaser	Clean threads in engine cylinder head
JDF-22*†	Box Type Crow Foot Wrench	Loosen and tighten injection nozzle fuel pipe connectors on 8630 Tractors (E27980-)

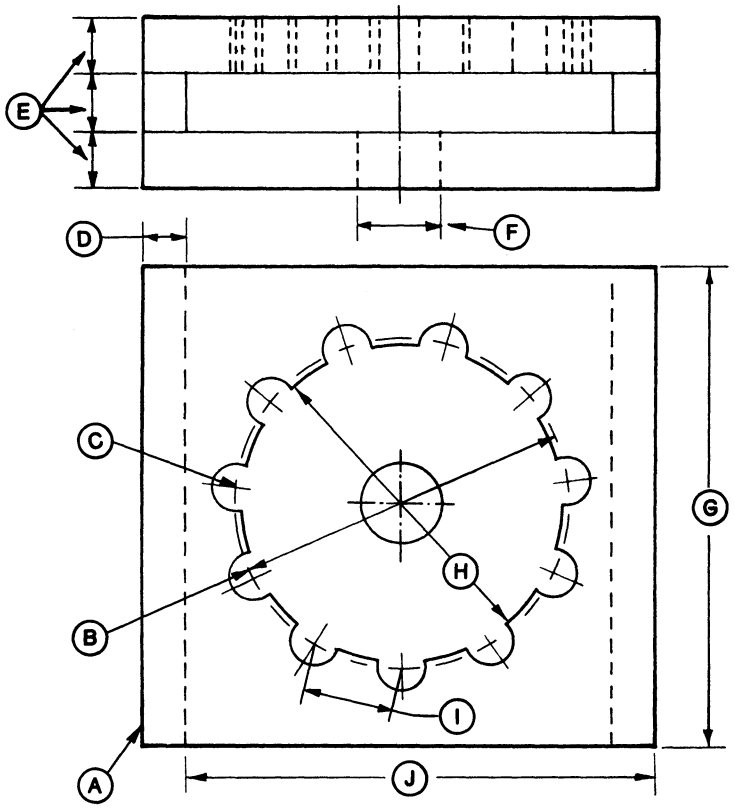

R 25038N

A—Hardwood or Aluminum Material
B—2-3/4 in. (70 mm)
C—Eleven 3/8 in. (10 mm) diameter holes equally spaced
D—1 in. (25 mm)
E—3/4 in. (19 mm)
F—Bore To Clear Wheel Hub
G—6-1/2 in. (165 mm)
H—2-1/2 in. (64 mm)
I —25/32 in. (20 mm)
J —6-1/2 in. (165 mm)

Fig. 1-Turbine Wheel Holding Fixture (8430 AiResearch Turbocharger)

* *Order from: Service Tools, P.O. Box, 314, Owatonna, Minnesota 55060.*
** *Make from R48695 Gland Nut by grinding a flat on each side 180 degrees apart.*
*** *Fabricate in your own shop. See Figs. 1 and 2 for pattern.*
† *A Bonney TF-24, Wrench, or equivalent may be used.*

SPECIAL TOOLS—Continued

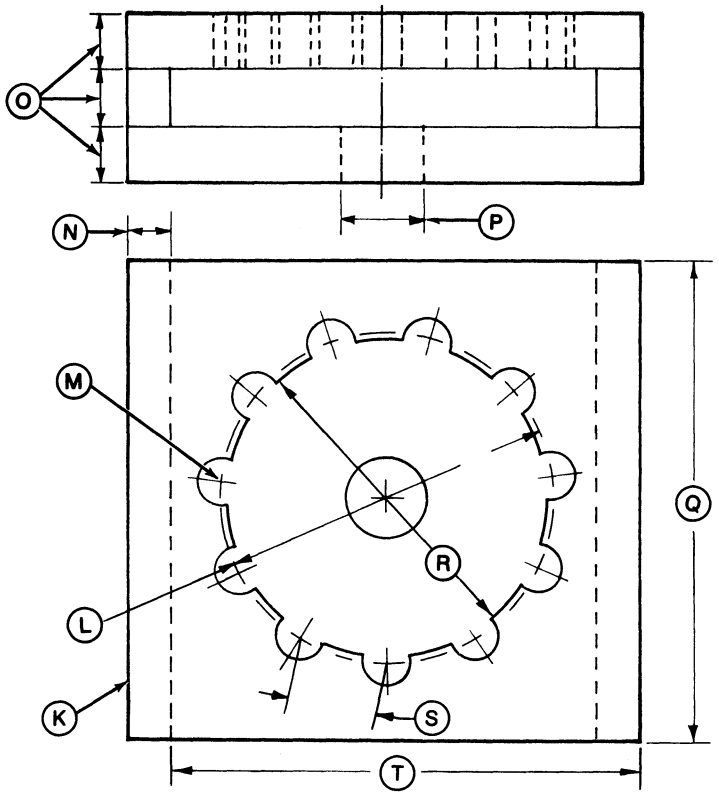

R 25039N

K—Hardwood or Aluminum Material
L—3-1/8 in. (79.3 mm)
M—Eleven 3/8 in. (10 mm) Diameter Holes Equally Spaced
N—1 in. (25 mm)
O—3/4 in. (19 mm)
P—1-1/16 - 1-1/8 in. (27-28.6 mm)
Q—6-1/2 in. (165 mm)
R—2-7/8 in. (73 mm)
S—57/64 in. (22.6 mm)
T—6-1/2 in. (165 mm)

Fig. 2-Turbine Wheel Holding Fixture (8630 AiResearch Turbocharger)

Section 40
ELECTRICAL SYSTEM

CONTENTS OF THIS SECTION

Page

GROUP 5 - INFORMATION AND DIAGRAMS
Precautions 5-2
Batteries 5-2
Circuit Breakers 5-3
Accessory Relay 5-5
Key Switch 5-5
Wiring Changes During Production 5-6
Wiring Diagrams 5-6
Bulkhead Connector 5-13
Harness Replacement 5-14

GROUP 10 - ELECTRICAL SYSTEM DIAGNOSIS
Electrical Diagnostic Kit 10-1
Electrical System Diagnosis 10-2

GROUP 15 - DELCOTRON CHARGING CIRCUIT
General Information 15-1
How the System Works 15-1
Precautions 15-4
Removal 15-5
Disassembly 15-5
Repair 15-6
Assembly 15-10
Installation 15-10

GROUP 20 - JOHN DEERE CHARGING CIRCUIT
General Information 20-1
How the System Works 20-1
Precautions 20-4
Removal 20-5
Disassembly 20-5
Repair 20-6
Installation 20-12

GROUP 25 - DELCO-REMY STARTING CIRCUIT
General Information 25-2
How the System Works 25-2
Starter Removal 25-5
Tests Before Disassembly 25-5
Disassembly and Repair 25-8
Installation 25-25

Page

GROUP 30 - JOHN DEERE STARTING CIRCUIT
General Information 30-2
How the System Works 30-2
Starter Removal 30-4
Tests Before Disassembly 30-4
Disassembly and Repair 30-6
Assembly 30-13
Installation 30-13

GROUP 35 - LIGHTING CIRCUITS
General Information 35-2
Flood Lamps 35-6
Head Lamps and Tail Lamps 35-9
Turn Signals and Warning Lamps 35-9
Light Switch 35-10
Instrument, Indicator, and Console Lamps . 35-11
Dome Lamp 35-11
Bulb Replacement 35-12

GROUP 40 - INSTRUMENT AND ACCESSORY CIRCUITS
Instrument Cluster 40-2
Accessories 40-6

GROUP 45 - REMOTE ELECTRICAL CIRCUITS
Electrical Remote Control 45-1
Outlet Socket 45-5

GROUP 50 - SPECIFICATIONS
General Information 50-1
Delcotron Charging Circuit 50-2
John Deere Charging Circuit 50-2
Starting Circuit 50-3
Lighting Circuits 50-5
Instrument Circuits 50-5
Accessory Circuits 50-6
Special Tools 50-7

Litho in U.S.A.

Group 5
INFORMATION AND DIAGRAMS

PRECAUTIONS

When working on electrical system, observe the following rules for your safety and prevention of damage to tractor:

Safety

1. Keep all sparks and flames away from batteries. Gas from battery electrolyte is highly flammable. Also avoid spilling electrolyte on yourself or on anything which could be damaged by the sulphuric acid.

2. Avoid sparks when connecting booster batteries or battery chargers. When possible, make last connection at a point away from batteries. Battery charger should be turned off before connecting or disconnecting.

3. When connecting batteries, always connect ground cable last. Disconnect it first.

4. When possible, disconnect battery ground cable before working on electrical system.

Prevention of Damage

1. Before connecting battery cables, be sure that battery and alternator connections are correct. Reverse polarity can cause permanent damage.

2. When connecting a booster battery, connect positive terminal of booster battery to positive terminal on rear battery. Then connect negative terminal of booster battery to tractor frame. Reverse polarity can cause permanent damage.

3. Never run engine with alternator or battery cables disconnected. Doing so might damage alternator or regulator.

4. Never short across or ground alternator terminals unless specifically recommended. Be careful to prevent grounding alternator wires when disconnected.

5. Never attempt to polarize an alternator.

6. Before using an electric welder on tractor, disconnect battery ground cable. Connect welder ground clamp as near as possible to the area being welded, and be sure it makes good electrical contact.

BATTERIES

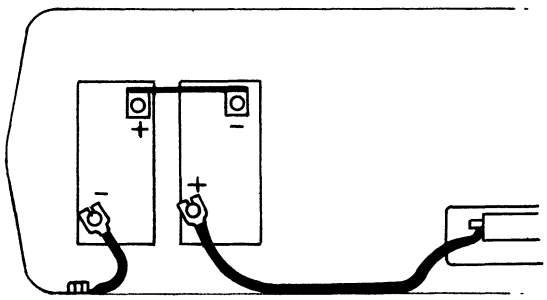

R 32576

Fig. 1-Battery Connections

Battery cable connections are shown in Fig. 1. Keep all connections clean and tight.

Both batteries must have the same rating. Battery specifications are as follows. Never use batteries with lower ratings.

Volts	John Deere Part No.	BCI Group	Cold Cranking Amps 0°F (−18°C)	Reserve Capacity (Minutes at 25 amps)
8430:				
6	AR47455	5D	800	340
8630:				
6	AR46116	7D	880	420
6	AT37931	4	975	420

Later 8630 Tractors were equipped with the AT37931 batteries. These batteries should be used whenever the batteries in any 8630 Tractor are replaced.

See Group 10 for instructions on battery testing.

CIRCUIT BREAKERS

The electrical system is protected by circuit breakers located under the left-hand cowl.

The circuit breakers reset themselves, but only after the load is removed. A heater element keeps the breaker tripped as long as the load is connected.

To reset a breaker, turn off the switches for all circuits connected to that breaker. Wait at least two minutes before trying the circuit again.

If this doesn't reset the breaker, disconnect the battery ground cable for at least two minutes. If breaker does not reset itself, breaker is defective. If it does reset itself, check carefully for a short circuit in the wiring.

Maximum voltage drop across a circuit breaker should not exceed 0.15 volt. If voltage drop is excessive, check for poor connections or a faulty breaker.

A circuit breaker should trip in 20 to 50 seconds when carrying 150% of its rated load—for instance, a 30-amp current through a 20-amp breaker.

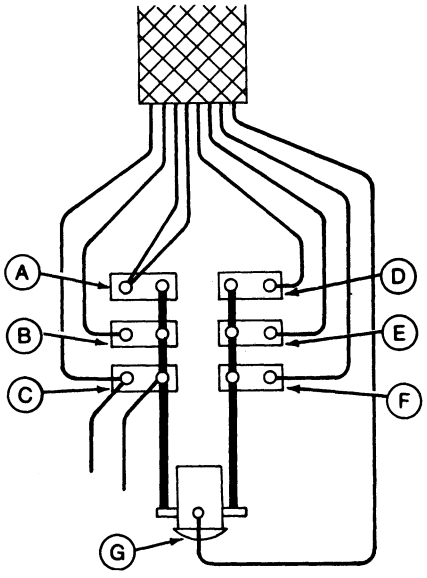

A—Key Switch, Dome Lamp (10 Amp)
B—Flood Lamps, Tail Lamps, Warning Lamps, Turn Signals (20 Amp)
C—Head Lamps, Transmission Lube Indicator (20 Amp)
D—Lighter, Horn (20 Amp)
E—Radio, Left-Hand Wiper, Left-Hand Blower (20 Amp)
F—Right-Hand Wiper, Right-Hand Blower (20 Amp)
G—Accessory Relay

Fig. 2-Circuit Breakers on 8430 Tractors (-4352) and 8630 Tractors (-5910)

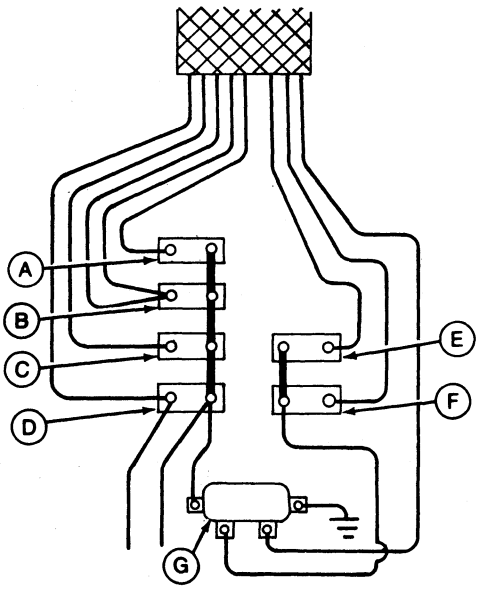

A—Lighter, Horn (20 Amp)
B—Key Switch, Dome Lamp (10 Amp)
C—Flood Lamps, Tail Lamps, Warning Lamps, Turn Signals (20 Amp)
D—Head Lamps, Transmission Lube Indicator (20 Amp)
E—Radio, Left-Hand Wiper, Left-Hand Blower (20 Amp)
F—Right-Hand Wiper, Right-Hand Blower (20 Amp)
G—Accessory Relay

Fig. 3-Circuit Breakers on 8430 Tractors (4353-5927) and 8630 Tractors (5911-8117)

CIRCUIT BREAKERS—Continued

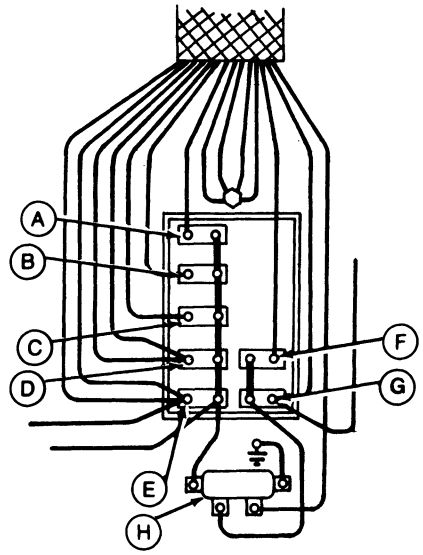

A—Front Flood Lamps, Upper Rear Flood Lamps (30 Amp)
B—Horn, Lighter (20 Amp)
C—Key Switch (10 Amp)
D—Turn Signals, Warning Lamps, Tail Lamps, Lower Rear Flood Lamps (20 Amp)
E—Head Lamps, Dome Lamp (20 Amp)
F—Radio, Left-Hand Wiper, Left-Hand Blower (20 Amp)
G—Right-Hand Wiper, Right-Hand Blower (20 Amp)
H—Accessory Relay

Fig. 4-Circuit Breakers on 8430 Tractors (5928-6694) and 8630 Tractors (8118-9366)

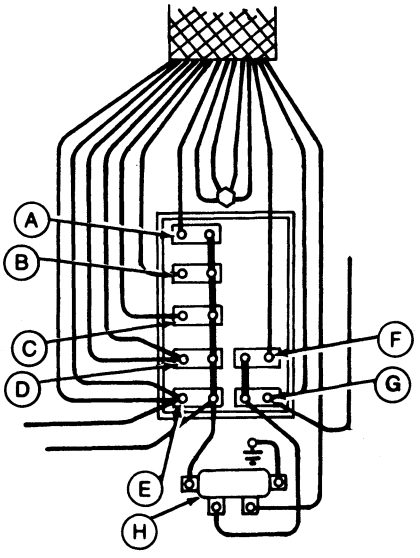

A—Front Flood Lamps, Upper Rear Flood Lamps (30 Amp)
B—Horn, Lighter (20 Amp)
C—Key Switch (10 Amp)
D—Turn Signals, Warning Lamps, Tail Lamps, Lower Rear Flood Lamps (20 Amp)
E—Head Lamps, Dome Lamp (20 Amp)
F—Radio, Wiper Motors (20 Amp)
G—Blower Motor (30 Amp)
H—Accessory Relay

Fig. 5-Circuit Breakers on 8430 Tractors (6695-) and 8630 Tractors (9367-)

ACCESSORY RELAY

The accessory relay provides power to the rear circuit breakers only when the key switch is in the "on" or "accessory" position. The relay should close with an audible click, and voltage drop across it should not exceed 0.2 volts.

Disconnect battery ground cable before removing accessory relay.

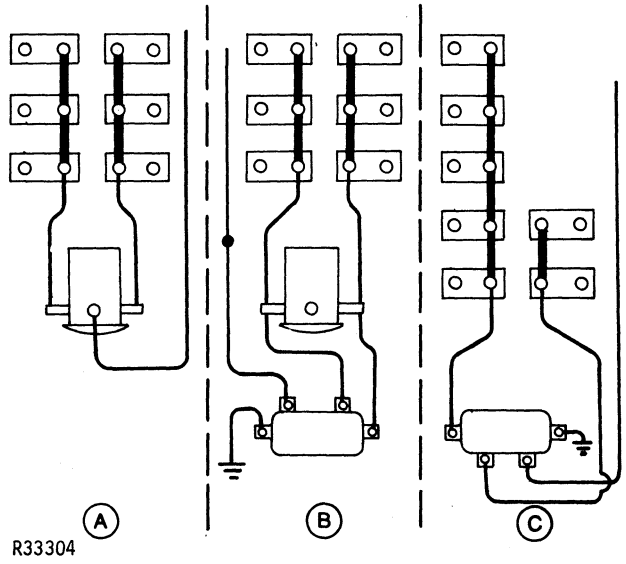

A—Early Accessory Relay
B—AR78381 Kit Installed to Replace Early Accessory Relay
C—Later Accessory Relay

Fig. 6-Accessory Relay

If an earlier style (cylindrical, three-terminal) relay fails, order an AR78381 kit to replace it with an improved (rectangular, four-terminal) relay. All necessary materials and instructions are in the kit.

DO NOT substitute any other similar-appearing relay. Other relays may be normally closed or may be intended for intermittent use only.

KEY SWITCH

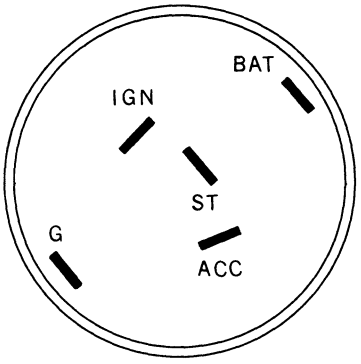

Fig. 7-Key Switch Terminals

The key switch should have continuity between the following terminals:

Accessory position—Bat. to Acc.

On—Bat. to Ign. and Acc.

Start—Bat. to Ign. and St.
G to ground.

When installing key switch, place R52725 ground connector washer on switch and insert into dash. Be sure to connect key switch ground lead after installing switch to complete the indicator lamp checking circuit.

WIRING CHANGES DURING PRODUCTION

Several changes were made in the electrical system during production of 8430 and 8630 Tractors. When diagnosing problems, make sure the instructions and wiring diagrams you use apply to tractors in the correct serial number range.

Changes in circuit breakers and accessory relay are outlined on the preceding three pages. Many early tractors have been equipped with the AR78381 kit to replace the early accessory relay (B, Fig. 6).

A clutch lube pressure gauge was installed on most tractors, but not all. For tractors equipped with the gauge, refer to Group 40.

Dome lamp and console lamp were combined into a single unit on tractors with Sound-Gard Body serial number (109590-).

On later tractors, a ground wire was added to the left-hand wiper harness. This insures a good ground for the wiper motor on a door with nylon hinge bushings. If wiper motor is not properly grounded on any tractor, simply run a ground wire from door to Sound-Gard Body frame.

Early tractors used a single transmission indicator lamp for both system pressure and lube pressure. Later tractors added a second indicator lamp for lube pressure. Refer to Group 40 for information.

8430 Tractors (5928-) and 8630 Tractors (8118-) are equipped with an improved lighting system. This added another circuit breaker, three relays, and several changes in wiring harnesses. Six flood lamps are provided as standard equipment. (Tractors without rear fenders get only four.) DO NOT install other supplemental lighting kits on these tractors. Refer to Group 35 for information on lighting circuits.

Early tractors have a 72-amp Delcotron alternator. Later tractors have a 90-amp John Deere alternator. The two are interchangeable, so the larger alternator is recommended as a replacement whenever a new alternator is needed. See Group 15 for Delcotron alternators or Group 20 for John Deere alternators

8430 Tractors (6695-) and 8630 Tractors (9367-) have a single blower motor and three-speed switch. The circuit breaker was changed to 30 amps and a resistor was added to control blower speed. Both wiper motors were connected to one circuit breaker. Refer to Group 40 for information.

WIRING DIAGRAMS

Use the following diagrams and information in the following groups for diagnosis. Due to design changes made during production, you must always make sure to use diagrams which apply to tractors in the correct serial number range.

Figs. 8 and 9 show all the wires on a tractor (not including optional equipment). Fig. 8 is for tractors built before changes were made in the lighting system, and Fig. 9 is for tractors built later.

Figs. 10 and 11 are schematic diagrams. They show the simplest electrical relationships of all components. Fig. 10 is before, and Fig. 11 after, the lighting system changes.

Fig. 12 shows location on the tractor of all electrical components.

Litho in U.S.A.

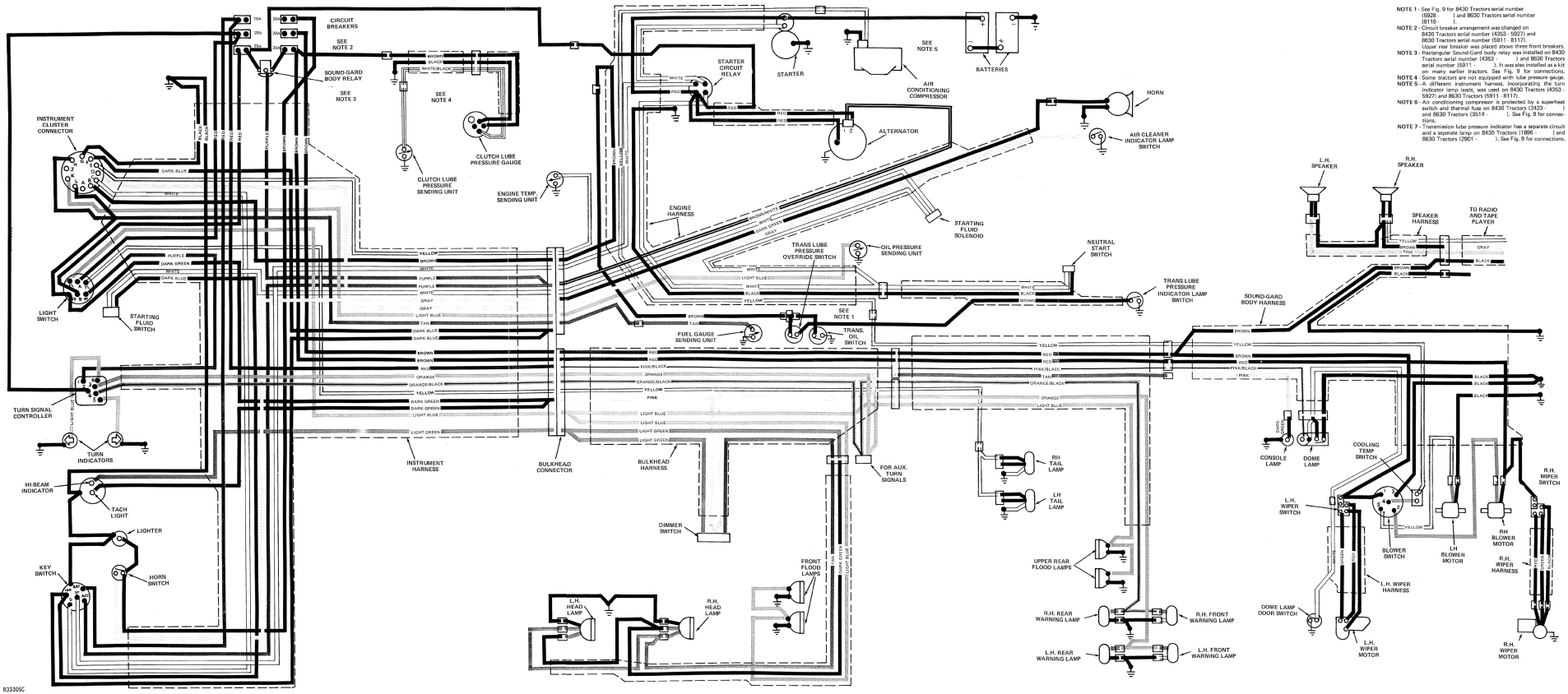

NOTE 1 - See Fig. 9 for 8430 Tractors serial number (5928 -) and 8630 Tractors serial number (8118 -).

NOTE 2 - Circuit breaker arrangement was changed on 8430 Tractors serial number (4353 - 5927) and 8630 Tractors serial number (5911 - 8117). Upper rear breaker was placed above three front breakers.

NOTE 3 - Rectangular Sound-Gard body relay was installed on 8430 Tractors serial number (4363 -) and 8630 Tractors serial number (5911 -). It was also installed as a kit on many earlier tractors. See Fig. 9 for connections.

NOTE 4 - Some tractors are not equipped with lube pressure gauge.

NOTE 5 - A different instrument harness, incorporating the turn indicator temp tests, was used on 8430 Tractors (4353 - 5927) and 8630 Tractors (5911 - 8117).

NOTE 6 - Air conditioning compressor is protected by a superheat switch and thermal fuse on 8430 Tractors (2423 -) and 8630 Tractors (3514 -). See Fig. 9 for connections.

NOTE 7 - Transmission lube pressure indicator has a separate circuit and a seperate lamp on 8430 Tractors (1896 -) and 8630 Tractors (2901 -). See Fig. 9 for connections.

Fig. 8-Wiring for 8430 Tractors (-5927) and 8630 Tractors (-8117)

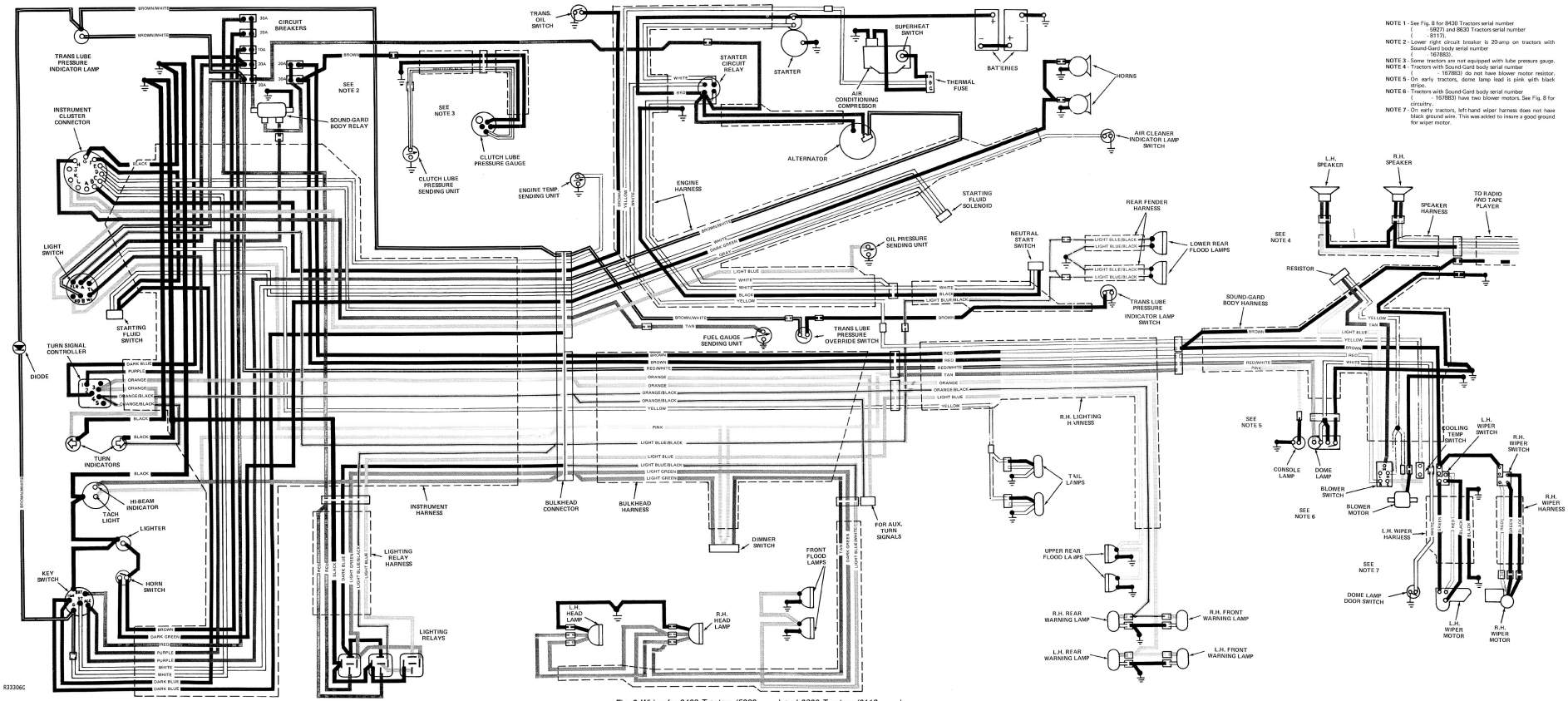

NOTE 1 - See Fig. 8 for 8430 Tractors serial number (- 5927) and 8630 Tractors serial number (- 8117).

NOTE 2 - Lower right circuit breaker is 20-amp on tractors with Sound-Gard body serial number (- 167883).

NOTE 3 - Some tractors are not equipped with lube pressure gauge.

NOTE 4 - Tractors with Sound-Gard body serial number (- 167883) do not have blower motor resistor.

NOTE 5 - On early tractors, dome lamp lead is pink with black stripe.

NOTE 6 - Tractors with Sound-Gard body serial number (- 167883) have two blower motors. See Fig. 8 for circuitry.

NOTE 7 - On early tractors, left-hand wiper harness does not have black ground wire. This was added to insure a good ground for wiper motor.

Fig. 9-Wiring for 8430 Tractors (5928-) and 8630 Tractors (8118-)

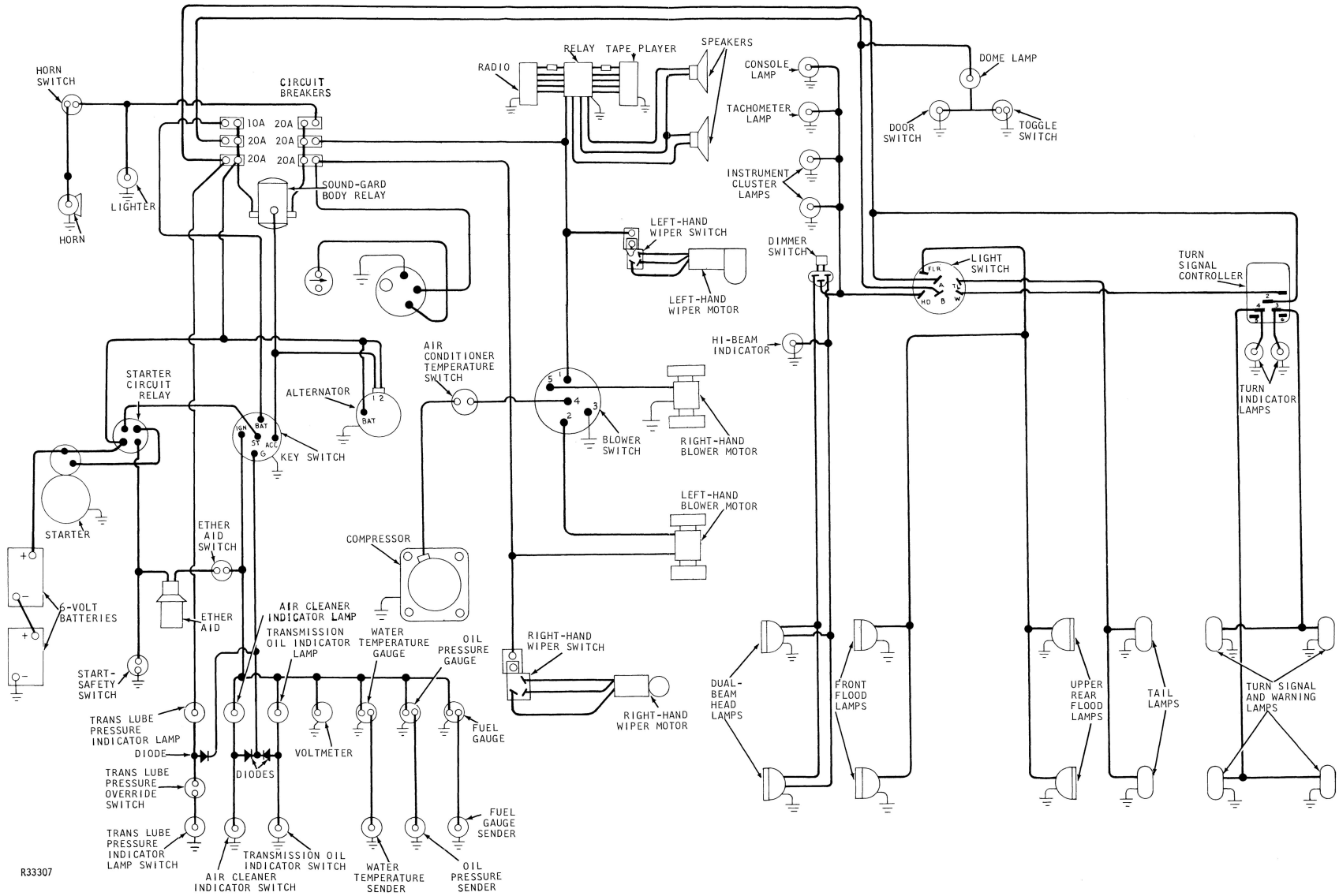

Fig. 10-Schematic Diagram for 8430 Tractors (-5927) and 8630 Tractors (-8117)

THIS PAGE FOLDS OUT

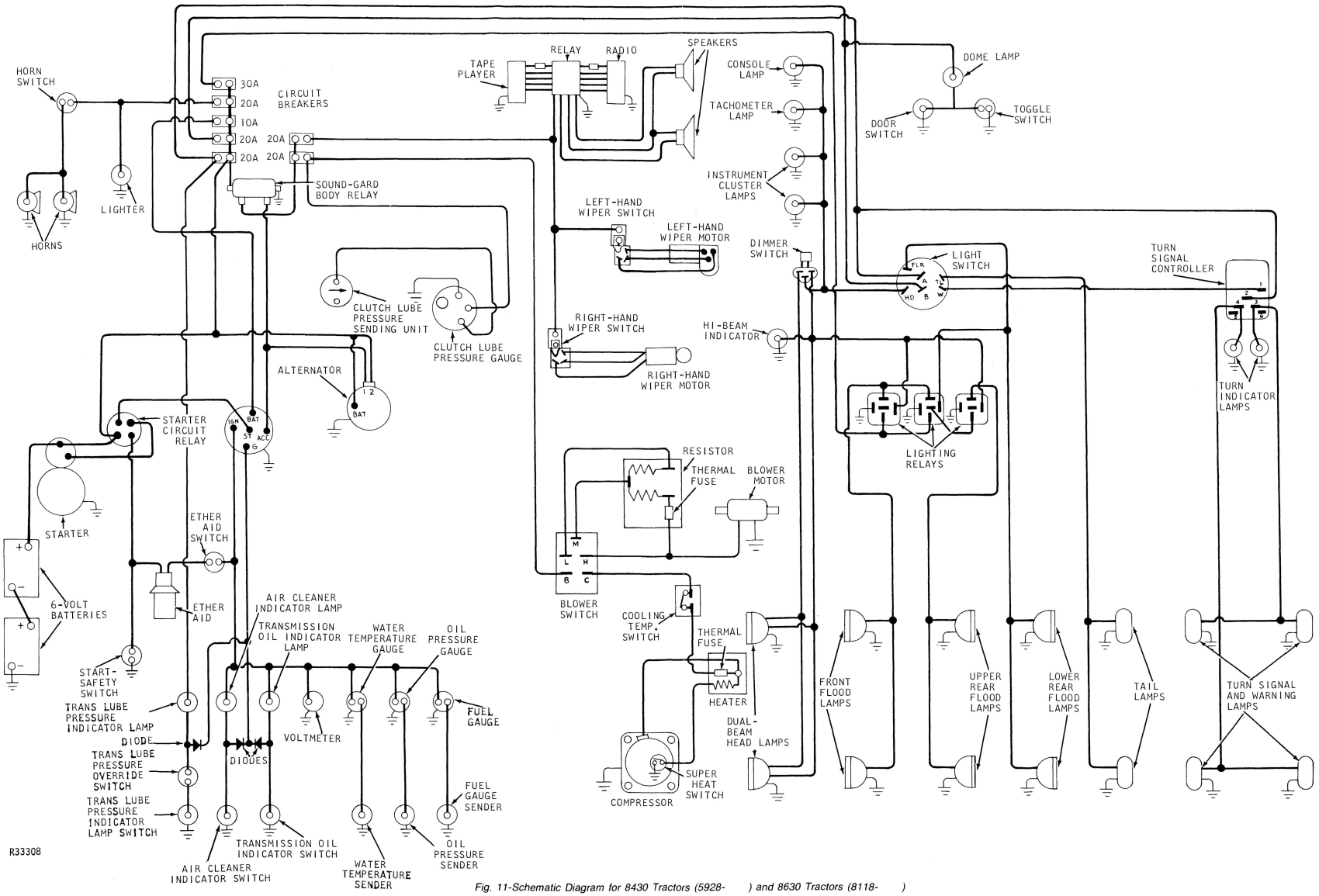

Fig. 11-Schematic Diagram for 8430 Tractors (5928-) and 8630 Tractors (8118-)

1—Upper Rear Flood Lamps
2—Warning Lamps
3—Speakers
4—Speaker Harness
5—Blower
6—Left-Hand Wiper Switch
7—Cooling Temperature Switch
8—Blower Switch
9—Right-Hand Wiper Switch
10—Sound-Gard Body Harness
11—Console Lamp
12—Dome Lamp
13—Blower Motor Resistor
14—Right-Hand Wiper Motor
15—Ground Screw
16—Radio
17—Left-Hand Wiper Motor
18—Dome Lamp Door Switch
19—Lower Rear Flood Lamps
20—Tail Lamps
21—Transmission Lube Pressure Switch
22—Neutral Start Switch
23—Right-Hand Lighting Harness
24—Clutch Lube Pressure Gauge
25—Transmission Oil Switch
26—Transmission Lube Pressure Override Switch
27—Clutch Lube Pressure Sender
28—Fuel Gauge Sender
29—Key Switch
30—Horn Switch
31—Lighter
32—Speed-Hour Meter
33—Turn Indicators
34—Trans. Lube Pressure Indicator Lamp
35—Turn Signal Controller
36—Instrument Cluster
37—Circuit Breakers
38—Lighting Relays
39—Starting Aid
40—Light Switch
41—Instrument Harness
42—Bulkhead Connector
43—Dimmer Switch
44—Engine Oil Pressure Sender
45—Starting Aid
46—Starting Motor
47—Engine Temperature Sender
48—Starter Circuit Relay
49—Engine Harness
50—Alternator
51—Air Conditioning Compressor
52—Thermal Fuse
53—Front Flood Lamps
54—Horns
55—Air Cleaner Vacuum Switch
56—Batteries
57—Dual Beam Head Lamps

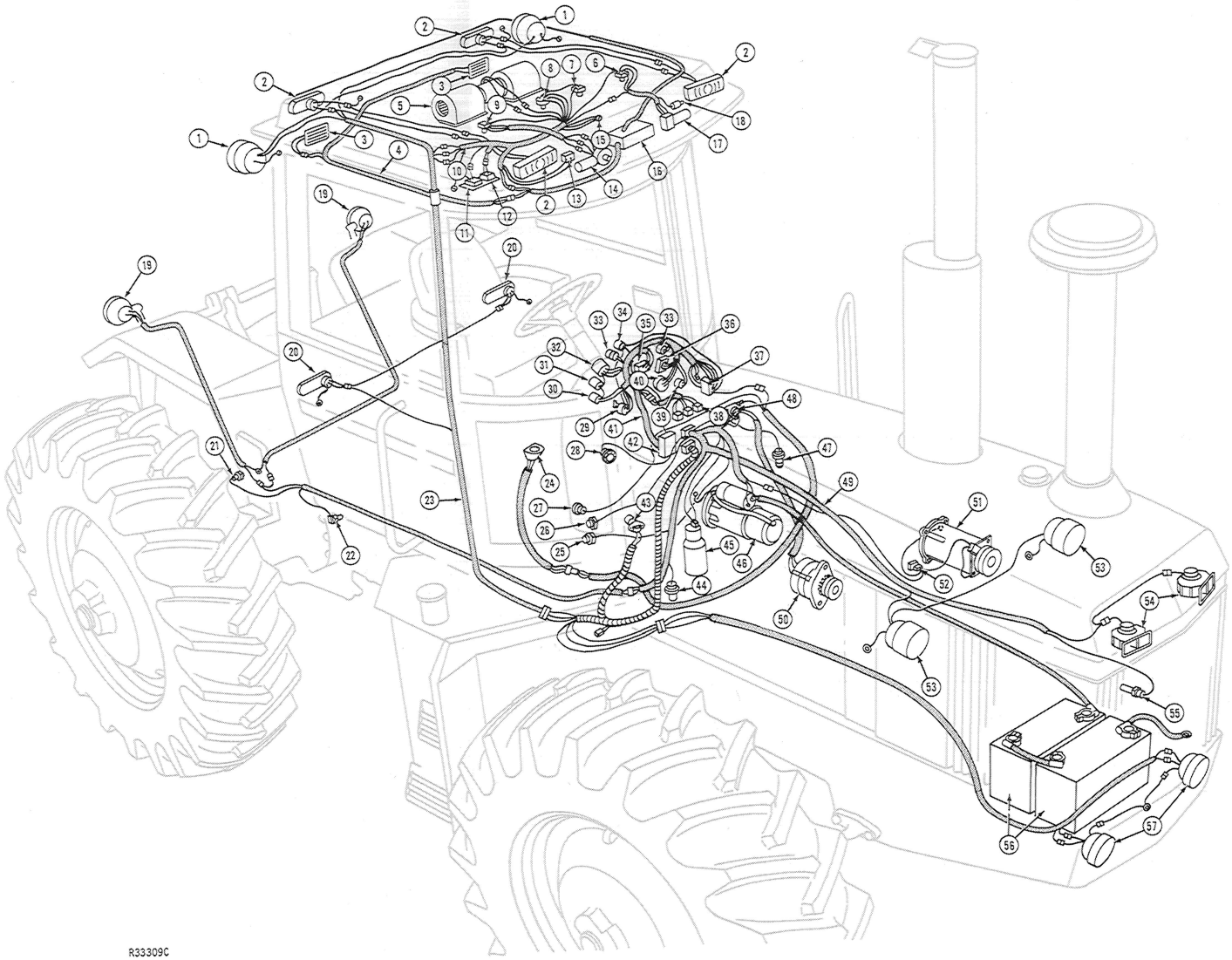

R33309C

Fig. 12-Electrical Components

THIS PAGE FOLDS OUT

Litho in U.S.A.

BULKHEAD CONNECTOR

Figs. 13 and 14 show circuit locations in the bulkhead connector for early and later tractors.

Connector is viewed from engine side of bulkhead.

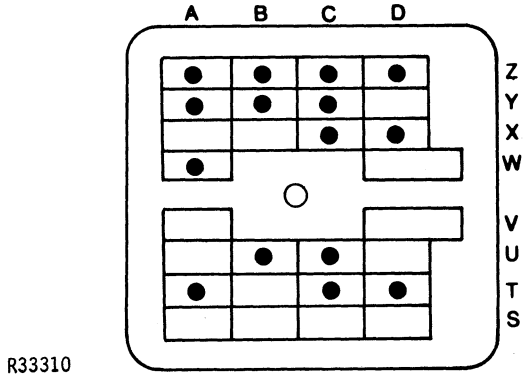

Fig. 13-Bulkhead Connector Terminals for 8430 Tractors (-5927) and 8630 Tractors (-8117)

AZ —White—Starting fluid solenoid
BZ —Tan—Fuel gauge sending unit
CZ —Brown—Transmission indicator switch (On early tractors, this circuit monitors both system pressure and lube pressure. On 8430 Tractors (1896-) and 8630 Tractors (2701-), it monitors system pressure only.)
DZ —Gray—Air cleaner vacuum switch

AY —Brown/white—Transmission lube pressure switch (This circuit is a separate wire, not included in engine harness or instrument harness. It is not used on early tractors.)
BY —White—Starter circuit relay
CY —Dark green (gray in instrument harness)—Horn

CX —Light blue—Engine oil pressure sending unit
DX —Yellow—Engine temperature sending unit

AW—Brown/white (purple in instrument harness)—Alternator

BU —Red (brown in instrument harness)—Radio, left-hand wiper, blower switch
CU —Red (brown in instrument harness)—Right-hand wiper, right-hand blower

AT —Pink/black (red in instrument harness)—Dome lamp
CT —Light green—Dimmer switch, high beams
DT —Pink (dark green in instrument harness)—Dimmer switch, console lamp
AS —Light blue—Flood lamps
BS —Yellow—Tail lamps
CS —Orange/black—Right-hand warning lamps
DS —Orange—Left-hand warning lamps

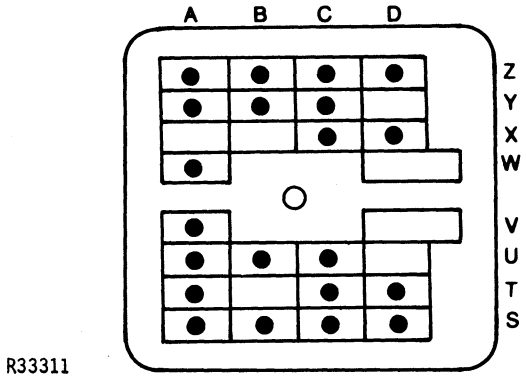

Fig. 14-Bulkhead Connector Terminals for 8430 Tractors (5928-) and 8630 Tractors (8118-)

AZ —White—Starting fluid solenoid
BZ —Tan—Fuel gauge sending unit
CZ —Brown—Transmission indicator switch
DZ —Gray—Air cleaner vacuum switch

AY —Brown/white—Transmission lube pressure switch
BY —White—Starter circuit relay
CY —Dark green—Horn

CX —Light blue—Engine oil pressure sending unit
DX —Yellow—Engine temperature sending unit

AW—Brown/white (purple in instrument harness)—Alternator

AV —Light blue/black (dark blue in instrument harness)—Front flood lamps

AU —Light blue—Upper rear flood lamps
BU —Brown—Radio, wiper motors (on early tractors; radio, left-hand wiper, blower switch)
CU —Brown—Blower motor (on early tractors; right-hand wiper, right-hand blower)

AT —Red/white—Dome lamp
CT —Light green—Dimmer switch, high beams
DT —Pink—Dimmer switch, console lamp

AS —Light blue/black—Lower rear flood lamps
BS —Yellow—Tail lamps
CS —Orange/black—Right-hand warning lamps
DS —Orange—Left-hand warning lamps

HARNESS REPLACEMENT

Fasten wiring harness securely with nylon cable ties so the harness will not have the insulation worn off or be subject to any other damage. If fastened to a pipe which is hot or which may vibrate, place a split hose around the harness or place a grommet around the pipe.

Installing Right-Hand Lighting Harness

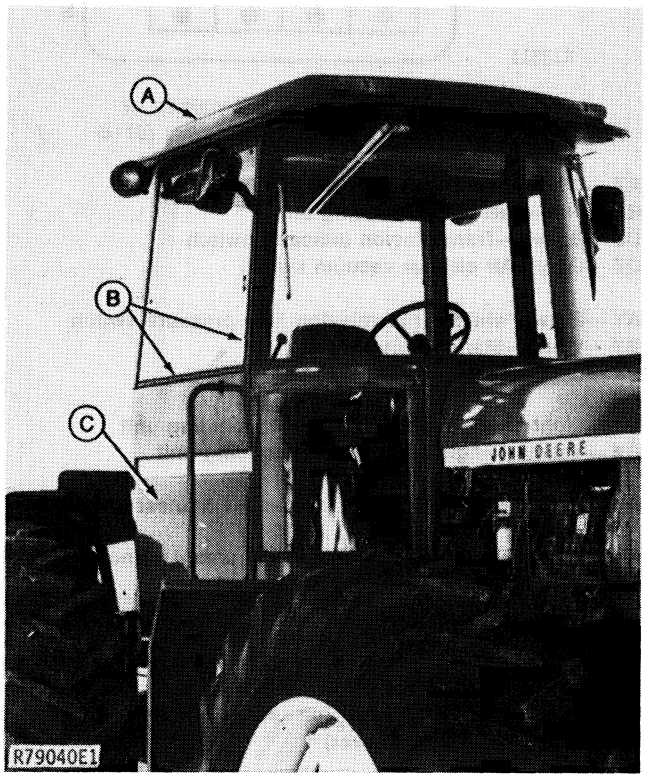

A—Roof
B—Moldings
C—Side Panel

Fig. 15-Right-Hand Lighting Harness on Sound-Gard Body

1. Open roof (A, Fig. 15). Open side window and remove trim moldings (B) at rear of right front post and at bottom of side window.

2. Remove right-hand Sound-Gard body side panel (C).

3. Disconnect all wires from harness, including tail lamp lead.

4. Attach a wire to one end of harness, and pull harness out from other end, so the wire can be used to pull new harness into position.

5. Attach wire to new harness, and pull it into position.

6. Make all connections to harness. Check all electrical components in Sound-Gard body for proper operation.

7. Install split hoses around harness where it passes through openings. Route harness away from any sharp edges.

8. Install Sound-Gard body side panel and trim moldings. Close roof.

Installing Sound-Gard Body Harness

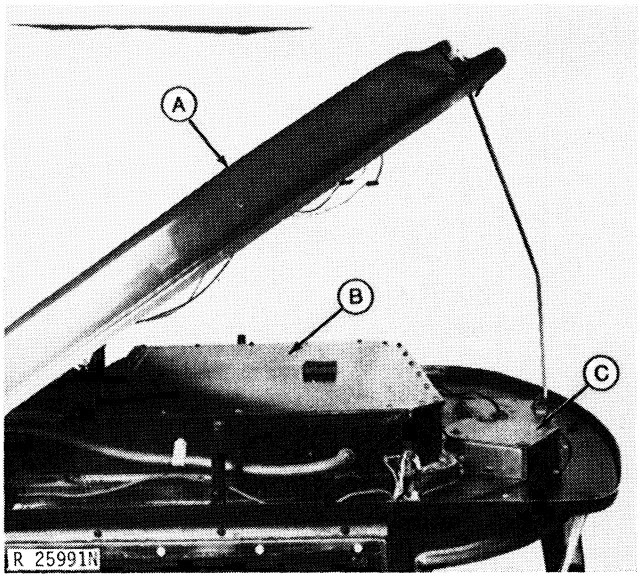

A—Roof Opened **C—R.H. Wiper Cover**
B—Heater-Evaporator Cover

Fig. 16-Access to Sound-Gard Body Harness from Above

1. Open roof (A, Fig. 16). Remove heater-evaporator cover (B) and right-hand wiper cover (C).

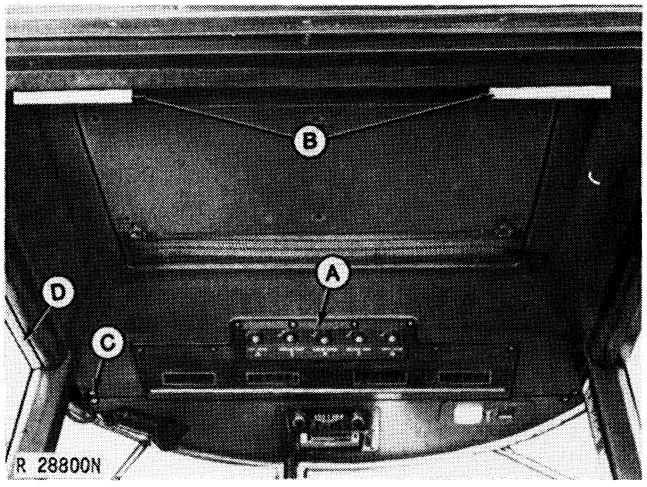

A—Control Panel **C—Trim Studs**
B—Speakers **D—Trim Moldings**

Fig. 17-Access to Sound-Gard Body Harness from Below

2. Remove control panel (A, Fig. 17). Disconnect and remove radio speakers (B).

3. Remove trim studs (C) holding front of headliner, using side cutters or needle nose pliers. Headliner is VERY EASILY damaged.

4. Open windows and remove trim moldings (D) which support headliner. Have a person on each side supporting the headliner to prevent damage. Remove headliner.

5. Disconnect and remove old harness. Switches are easier to disconnect and connect if you first remove them from their mountings.

6. Install new harness and make connections. Check all electrical components in the Sound-Gard Body to be sure they all work. Install grommet where harness passes through inner roof. Place sealant around harness and grommet to prevent air leaks.

7. Install head liner, control panel, wiper cover, and heater-evaporator cover. Close the roof.

Removing Connector Body From Terminals

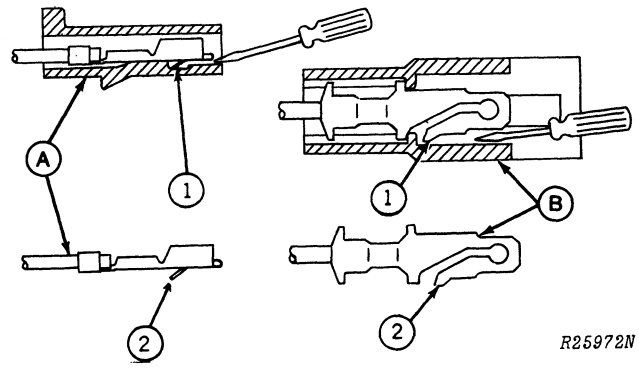

A—Female Terminal **B—Male Terminal**

Fig. 18-Removing Connector Body from Terminal

1. Use a small screwdriver to depress locking tang on terminal. Slide connector body off.

2. Be sure to bend locking tang back to its original position before installing connector body.

Litho in U.S.A.

Group 10
ELECTRICAL SYSTEM DIAGNOSIS

ELECTRICAL DIAGNOSTIC KIT

The following electrical diagnostic equipment is recommended for all tractors.

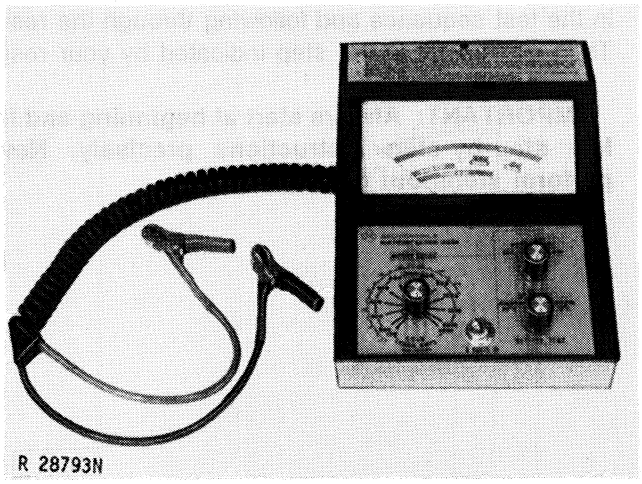

Fig. 1-D-24001MO Battery Tester

1. D-24001MO Battery Tester quickly indicates battery condition. Battery testing instructions are on page 2, and an operator's manual is included with the tester.

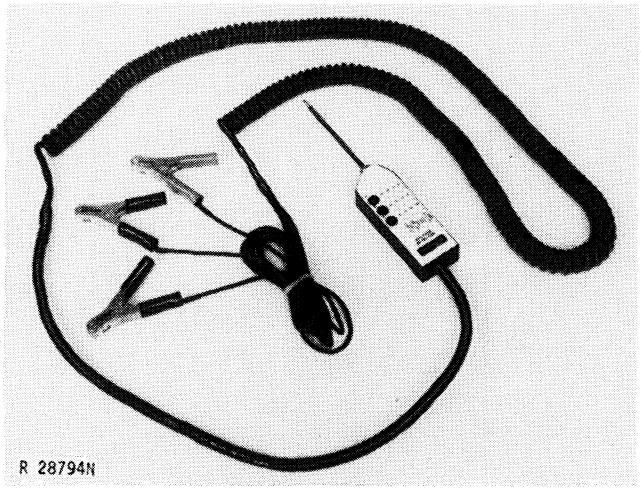

Fig. 2-D-05136ST Voltage Detector

2. D-05136ST Voltage Detector aids in checking all wiring circuits. "A" light indicates battery voltage at the component being tested. "C" light indicates a good ground. No light indicates an open circuit or excessive voltage drop. ("B" light is not used when testing these tractors.)

An operator's manual is included with the voltage detector.

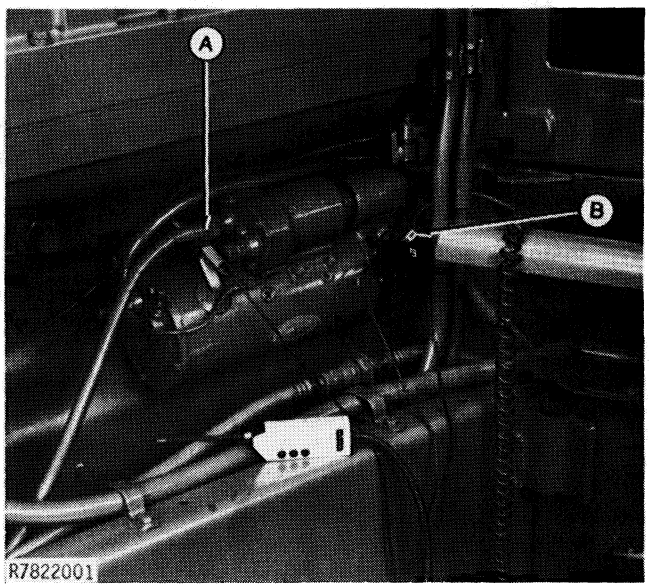

A—Known Source of Battery Voltage ("A" Clip)
B—Suitable Ground ("B" and "C" Clips)

Fig. 3-Voltage Detector Connections

For these tractors, connect "A" clip to positive terminal of rear battery or to a known source of battery voltage. "B" terminal on alternator and large terminal where battery cable attaches to starter are convenient locations. Connect both "B" and "C" clips to a good ground.

Fig. 4-D-19001TT Volt-Ohm-Amp Meter

3. D-19001TT Volt-Ohm-Amp Meter is used for testing alternator and for whatever other jobs require measuring voltage, resistance, or current flow.

Instructions for testing alternator are in Section 4 of the following diagnosis. An operator's manual is included with the meter.

NOTE: Replacement fuses for Volt-Ohm-Amp Meter are available. Order No. D-05169ST.

ELECTRICAL SYSTEM DIAGNOSIS

The following pages give a complete diagnosis procedure for electrical system.

Where circuit diagrams appear on a fold-out page, you can lay that page out so the diagrams show as you follow the test sequence through other pages.

Read the charts from left to right, starting with a step in the test sequence and following through the result. Then go directly to the step indicated by your result.

IMPORTANT: Always start at beginning and follow step-by-step instructions precisely. Never perform steps out of sequence.

Litho in U.S.A.

CONTENTS

Section

0 **INTRODUCTION** ——— 0

1 **PRELIMINARY CHECKS** ——— 1
A1 through A19 ——— a. Key Switch Voltage Test
b. Battery Testing

2 **OPERATIONAL CHECK of all switches and electrical components:** ——— 2
A ——— Lighting Circuit
B ——— Horn and Lighter Circuit
C ——— Accessory Circuit
D ——— Instrument Cluster Circuit
E ——— Starting Circuit
F ——— Engine Running Checks
G ——— Radio-Tape Player Circuit

3 **STARTING CIRCUIT** ——— 3
A1 through A5 ——— Operational Checks
B1 ——— Starter operates, but engine does not crank.
C1 ——— Starter solenoid chatters (engine may or may not crank)
D1 through D13 ——— Starter solenoid does not operate with transmission in PARK.
E1 through E7 ——— Engine cranks slowly.
F1 through F3 ——— Engine cranks in gear.
G1 through G2 ——— Starter continues to operate after engine starts, or fuel shut-off pulled out.
H1 through H6 ——— Engine starts, but starting aid will not inject starting fluid.
J1 through J2 ——— Engine cranks but stops cranking when starting aid switch pushed IN.

4 **CHARGING CIRCUIT** ——— 4
A1 through A3 ——— Operational Checks
B1 through B21 ——— Delco Remy Alternator
C1 through C18 ——— John Deere ND Alternator

5 **INSTRUMENT CLUSTER Gauge and Indicator Circuits** ——— 5
A1 through A12 ——— Operational Checks
B1 through B6 ——— Voltmeter
C1 through C13 ——— Fuel, Engine Temperature and Engine Oil Pressure
D1 through D12 ——— Transmission Oil and Air Cleaner
E1 through E5 ——— Transmission Oil Circuit
F1 through F8 ——— Clutch Lube Circuit
G1 through G9 ——— Transmission Lube Circuit
H1 ——— Clutch and Transmission Lube Circuit (Tractors without a Transmission Lube Indicator)

6 **LIGHTING CIRCUIT** ——— 6
A1 through A7 ——— Operational Checks
——— Schematics No. 6-1 through 6-5 8430 (-005928) 8630 (-008118)
——— Schematics No. 6-6 through 6-8 8430 (-005928) 8630 (-008118) with auxiliary light switch
——— Schematics No. 6-9 through 6-13 8430 (005928-) 8630 (008118-)

7 **SGB ACCESSORY CIRCUIT** ——— 7
A1 through A10 ——— Operational Checks
Schematics No. 7-1 through 7-7

R32791

Litho in U.S.A.

CONTENTS (Continued)

Section

8 - 8 **HORN AND LIGHTER CIRCUIT**
A1 through A5 ____ Operational Checks
Schematic No. 8-1

9 - 9 **RADIO AND TAPE PLAYER CIRCUIT**
A1 ____ Operational Checks
AM okay, but FM inoperative.
FM okay, but AM inoperative.
B1 through B12 ____ Tape player okay, but radio inoperative.
Radio and tape player inoperative.
Radio okay, but tape player inoperative.
One speaker inoperative.
C1 ____ Poor Reception
D1 ____ Excessive static
Schematics No. 9-1 through 9-4.

R32792

INTRODUCTION

When diagnosing any electrical problem, there are two common tests that *must* be performed.

PRELIMINARY CHECKS (Refer to Section 1) — Key switch "ON" checks battery voltage. Key switch at "START" checks battery condition. The tractor voltmeter indicates voltage at key switch and buss bar.

OPERATIONAL CHECKS (Refer to Section 2) — Operational checks indicate which circuits are operating properly. This is accomplished by turning each electrical function switch "ON" then "OFF" and observing reaction of components. Operational checks should be performed both before diagnosing circuit problems and after repair to verify that the problem has been solved.

COMMON CIRCUIT PROBLEMS

SHORTED CIRCUIT — A shorted circuit may result in the wrong component operating, i.e., improper wire-to-wire contact. To test for a shorted circuit or improperly wired circuit:

1. Turn the correct component switch "ON".
2. Start at controlling switch of component that should not be operating.
3. Follow circuit and disconnect leads at couplers until component stops operating.
4. Short or improper connection will be between the last two leads disconnected.

HIGH RESISTANCE OR OPEN CIRCUIT — High resistance or open circuit usually results in slow, dim or no component operation, i.e., poor, corroded or disconnected connections. To test for high resistance and open circuits:

1. Check all terminals and grounds of circuit for corrosion.
2. If terminals are not corroded or loose, the problem is in the component or wiring.

GROUNDED CIRCUITS — Grounded circuits usually result in no component operation and a tripped circuit breaker, i.e., power leads contacting a "ground". To test for "grounds", check for voltage in the power circuit from the circuit breaker.

HOW TO USE STEP-BY-STEP CHARTS

The charts are usually divided into three sections:

STEP → SEQUENCE → RESULT

Always start at the first step and go through the complete sequence from left to right. Each sequence ends with a result and tells you the next step. Work through the appropriate steps as directed until the malfunction is found. Make the repair and return to the Operational Check (A1) for that circuit to be certain the malfunction has been corrected. Finally, repeat Section 2, "Operational Checks" to be certain other circuits were not affected during the repair.

ABBREVIATIONS USED

SGB	- Sound-Gard Body	SPEC.	- Specification	BAT.	- Battery
TRANS.	- Transmission	TEMP.	- Temperature	ACC.	- Accessory
HSG	- Housing	MIN.	- Minimum	IGN.	- Ignition
RPM	- Revolution Per Minute	MAX.	- Maximum	SW.	- Switch
AC	- Alternating Current	NEG.(−)	- Negative	ST	- Start
CCA	- Cold Cranking Amps	POS.(+)	- Positive	NO.	- Number
MA	- Milli-Amp	WL	- Warning Light	HI	- High
V	- Volts or Voltage	TL	- Tail Light	LO	- Low

R32793

Litho in U.S.A.

USING A PROBE LIGHT

0

The following examples show how to connect a probe light to check a circuit for voltage or continuity to ground. When checking a circuit for battery voltage, connect the probe light clip to ground as shown:

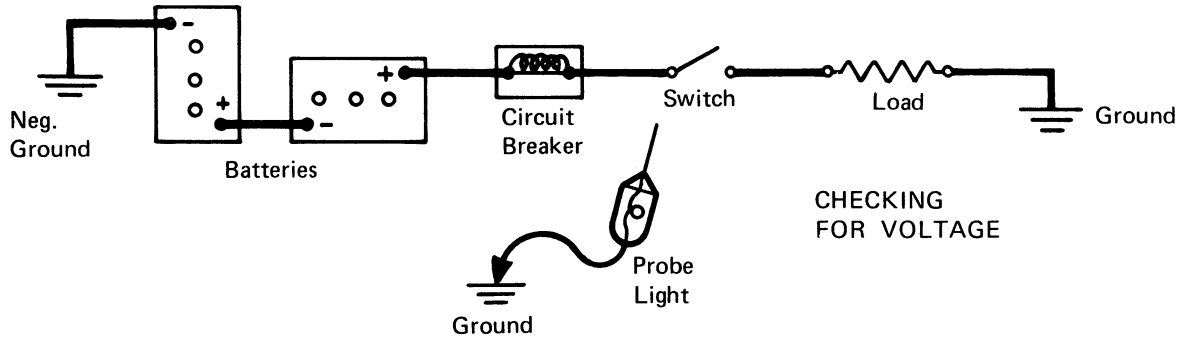

When checking a circuit for continuity to ground connect the probe light clip to a known source of battery voltage as shown:

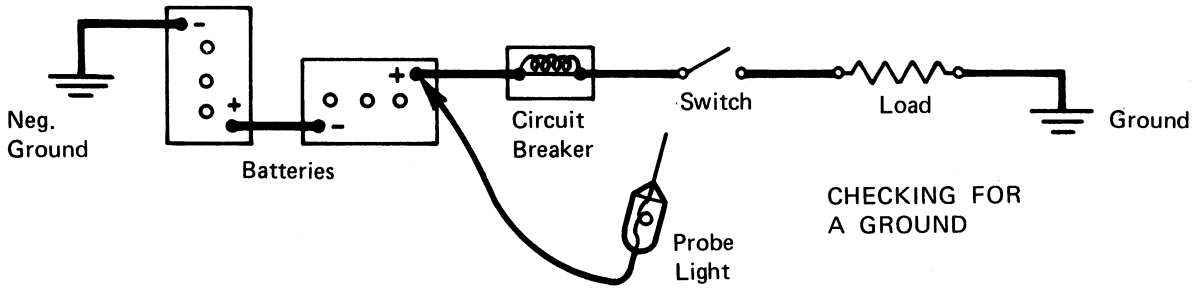

The controlling switches MUST BE "ON" and the circuit connected to the component to locate low resistance (0.5 to 5.0 ohms) in the load circuit or ground circuit of a component.

The following seven steps can be used to locate opens, grounds, high resistance or faulty components with the use of the fold-out color electrical wiring diagram.* The simple circuit can be used as a reference for each step but you must relate to the color wiring diagram for additional components that may be connected in parallel.

You may want to start at step (6) as your first step for diagnosing any manfunctioning circuit where the component is easily accessible. **If battery voltage is not present at step (6), it will be necessary to go to step (1) to isolate the malfunction.**

*IMPORTANT - This sequence is not to be used in a circuit that is functioning properly.

NOTE: After any repair, always return to Operational Check, Section 2, to be certain another circuit has not been affected during the repair.

Litho in U.S.A.

0

USING A PROBE LIGHT

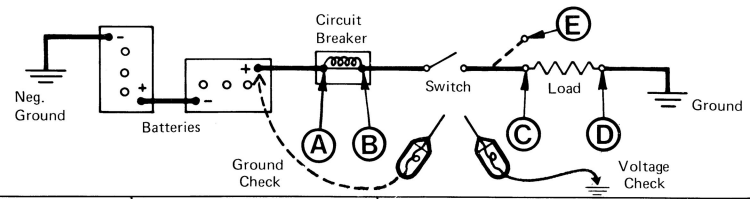

Step	Sequence	Result
(1) Switch "ON":*	Check battery side of circuit breaker (A) for battery voltage.	Bright Light: Battery voltage - Normal **GO TO 2** Dim or No Light: Low Voltage - Repair high resistance or open circuit from battery.
(2) Switch "OFF":	Check load side of circuit breaker (B) for battery voltage.	Bright Light: Battery Voltage - Normal **GO TO 4** Dim Light: Low Voltage-Replace circuit breaker. No Light: NO Voltage- **GO TO 3**
(3) Switch "OFF":	Check load side of circuit breaker (B) for continuity to ground. (Clip at battery voltage (A) .)	Bright Light: Continuity to ground - Repair grounded circuit at or before switch. No Light: NO Continuity to ground - Replace circuit breaker.
(4) Switch "ON":	Check load side of circuit breaker (B) for battery voltage.	Bright Light: Battery Voltage - Normal **GO TO 6** Dim Light: Low Voltage-Replace circuit breaker. No Light: NO Voltage - **GO TO 5**
(5) Disconnect Lead to component at (C)	Switch "ON": Check lead at (E) for battery voltage	Bright Light: Battery Voltage - Repair Component. No Light: NO Voltage - Repair grounded circuit at or after switch. Note: To verify a grounded circuit place the tester clip at battery voltage. A light at (E) indicates the circuit is grounded.
(6) Switch "ON":	Check lead to component at (C) for battery voltage.	Bright Light: Battery Voltage - Normal **GO TO 7** Dim Light: Low Voltage - Repair high resistance in circuit between circuit breaker and component. No Light: NO Voltage- Repair high resistance or open in circuit between circuit breaker and component.
(7) Switch "ON":	Check ground lead of component at (D) for voltage.	No Light: Good continuity to ground - Repair component. Dim or Bright Light: Poor continuity to ground - Repair high resistance or open ground circuit.

*Controlling Switch for Component

R32795

USING A VOLTAGE DETECTOR

Voltage detector checks a circuit for a "Voltage Level" or "Continuity to Ground". Connect the "A" lead to positive terminal of LH battery and attach "B" and "C" leads to any convenient ground.

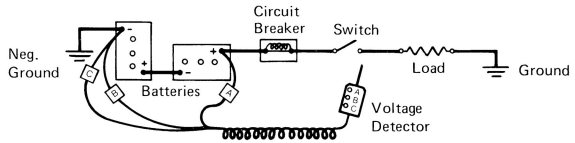

Contact a terminal with the probe and observe the three lights.

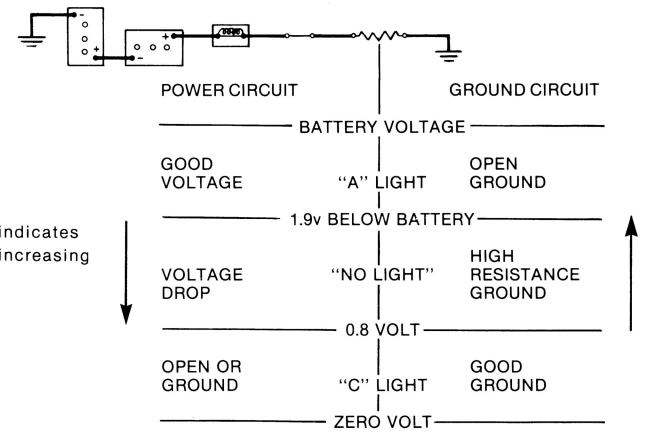

Note: Arrow indicates direction of increasing resistance.

POWER CIRCUIT
The controlling switches MUST BE "ON" and the circuit connected to the component, to locate resistance (0.5 to 260 ohms) in the circuit to a component.

GROUND CIRCUIT
The controlling switches MUST BE "ON" and battery voltage at the component to locate resistance (0.5 to 480 ohms) in the ground circuit from a component.

The following seven steps can be used to locate opens, grounds, high resistance or faulty components with the use of the fold-out color electrical wiring diagram.*The simple circuit can be used as a reference for each step but you must relate to the color wiring diagram for additional components that may be connected in parallel.

You may want to start at step (6) as your first step for diagnosing any malfunctioning circuit where the component is easily accessible. **If battery voltage is not present at step (6) , it will be necessary to go to step (1) to isolate the malfunction.**

*Important - This sequence is not to be used in a circuit that is functioning properly.

NOTE: After any repair, always return to Operational Check, Section 2, to be certain another circuit has not been affected during the repair.

Litho in U.S.A.

0

USING A VOLTAGE DETECTOR

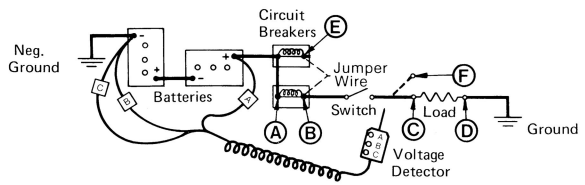

Step	Sequence	Result
(1) Switch "ON"*	Check battery side of circuit breaker (A) for battery voltage	"A" Light: Battery Voltage - Normal **GO TO 2** NO Light: Low Voltage - Repair high resistance in circuit from battery.
(2) Switch "OFF"	Check load side of circuit breaker (B) for battery voltage.	"A" Light: Battery Voltage - Normal **GO TO 3** NO Light: Low Voltage-Replace circuit breaker. "C" Light: Continuity to ground - Repair grounded circuit at or before switch.
(3) Switch "ON":	Check load side of circuit breaker (B) for battery voltage.	"A" Light: Battery Voltage - Normal **GO TO 6** NO Light: LOW voltage - Replace circuit breaker. "C" Light: Continuity to ground **GO TO 4**
(4) Switch "OFF": Connect a jumper wire from a known good circuit breaker (E) to the suspected bad circuit breaker.	Switch "ON": Check load side of circuit breaker (E) for battery voltage.	"A" Light: Battery Voltage - Replace breaker A-B "C" Light: Continuity to ground - **GO TO 5**
(5) Disconnect lead to component at (C)	Switch "ON": Check lead at (F) for battery voltage.	"A" Light: Battery Voltage - Repair shorted component. "C" Light: Continuity to ground - Repair grounded circuit at or after switch.
(6) Switch "ON":	Check lead to component at (C) for battery voltage.	"A" Light: Battery Voltage - Normal **GO TO 7** NO Light: Low Voltage - Repair high resistance in switch or circuit between circuit breaker and component. "C" Light: Continuity to ground - Repair high resistance or open in switch or circuit between circuit breaker and component.
(7) Switch "ON":	Check ground lead of component (D) for voltage.	"C" Light: Good continuity to ground - Repair component. NO Light: Voltage - Repair high resistance to ground. "A" Light: Battery Voltage - Repair open ground circuit.

*Controlling Switch for Component

R32796

CIRCUIT BREAKERS

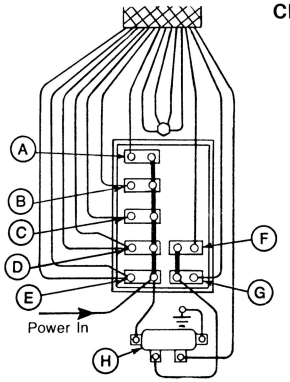

8430 (005928-)
8630 (008118-)

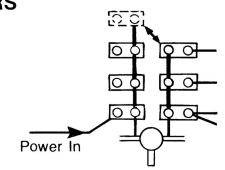

8430 (-005928)
8630 (-008118)

A Front Flood Lamps and Upper Rear Flood Lamps
B Horn, Lighter
C Key Switch
D Turn Signals, Warning Lamps, Tail Lamps, Lower Rear Flood Lamps
E Head Lamps, Dome Lamp
F Radio, Left-Hand Wiper, Blowers
G Right-Hand Wiper, Blowers
H Sound-Gard Body Relay

Fig. 2-Circuit Breakers (Tractor With Sound-Gard Body)

Breaker "A"	30 amps
Breakers "B", "D", "E", "F", "G" at load center	20 amps
Breaker "C" at load center	10 amps
Electrical remote control breaker	25 amps
Breaker trip time with 50% overload	20 to 50 seconds
Breaker reset time with load removed	60 seconds

BULKHEAD CONNECTOR

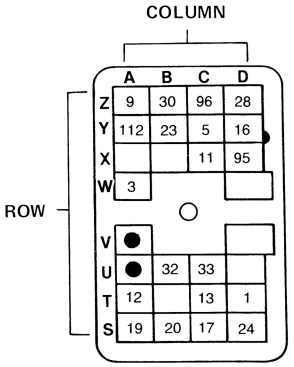

8430 (-005928)
8630 (-008118)
(Without auxiliary light switch.)
Bulkhead Connector Terminal Location as Viewed From Engine Side of Bulkhead

Row
Column

AZ-9	Starting Aid Solenoid
BZ-30	Fuel Gauge Sender
CZ-96	Clutch and Transmission Oil Pressure Switch
DZ-28	Air Cleaner Switch
AY-112	Transmission Lube Pressure Switch
BY-23	Starter Circuit Relay
CY-5	Horn
DY-16	Ignition Circuit (not used)
CX-11	Oil Pressure Sender
DX-95	Engine Temperature Sender
AW-3	Alternator Energizing Circuit
BU-32	Radio, Compressor, Left Wiper, Left Blower
CU-33	Right Wiper, Right Blower
AT-12	Dome Lamp
CT-13	Hi-beam Indicator Lamp
DT-1	Console Lamp
AS-19	Front and Rear Flood Lamps
BS-20	Tail Lamps
CS-17	Right Warning Lamps
DS-24	Left Warning Lamps

Litho in U.S.A.

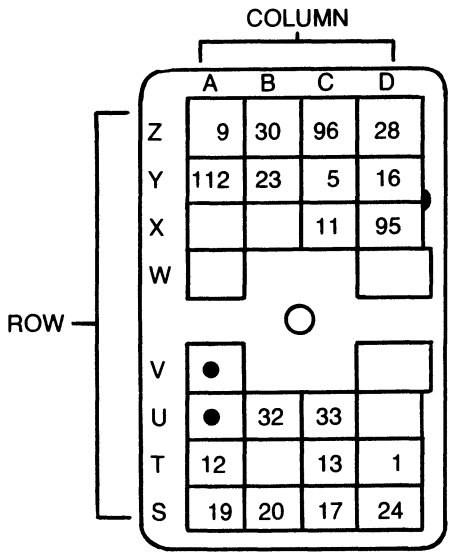

8430 (-005928)
8630 (-008118)
(With auxiliary light switch.)
Bulkhead connector terminal location as viewed from engine side of bulkhead.

Row
Column

AZ-9	Starting Aid Solenoid
BZ-30	Fuel Gauge Sender
CZ-96	Clutch and Transmission Oil Pressure Switch
DZ-28	Air Cleaner Switch
AY-112	Transmission Lube Pressure Switch
BY-23	Starter Circuit Relay
CY-5	Horn
DY-16	Ignition Circuit (not used)
CX-11	Oil Pressure Sender
DX-95	Engine Temperature Sender
AW-3	Alternator Energizing Circuit
AV-●	Auxiliary Rear Lower Flood Lamps
AU-●	Rear Upper Flood Lamps
BU-32	Radio, Compressor, Left Wiper, Left Blower
CU-33	Right Wiper, Right Blower
AT-12	Dome Lamp
CT-13	Hi-Beam Indicator Lamp
DT-1	Console Lamp
AS-19	Front Flood Lamps
BS-20	Tail Lamps
CS-17	Right Warning Lamps
DS-24	Left Warning Lamps

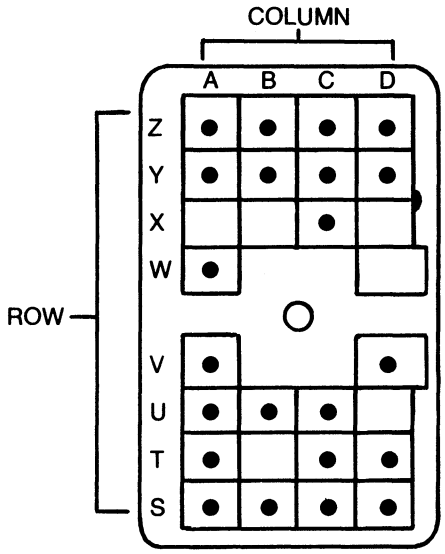

8430 (005928-)
8630 (008118-)
Bulkhead connector terminal location as viewed from engine side of bulkhead.

Row
Column

AZ	Starting Aid Switch
BZ	Fuel Gauge
CZ	Clutch and Transmission Oil Indicator
DZ	Air Cleaner Indicator
AY	Transmission Lube Pressure Switch
BY	Starter Circuit Relay
CY	Horn
DY	Ignition Circuit (not used)
CX	Oil Pressure Gauge
DX	Engine Temperature Gauge
AW	Alternator Energizing Circuit
AV	Front Flood Lamps
DV	Auxiliary Rear Flood Lamps
AU	Upper Rear Flood Lamps
BU	Radio, Compressor, Left Wiper, Left Blower
CU	Right Wiper, Right Blower
AT	Dome Lamp
CT	Hi-Beam Indicator
DT	Console Lamp
AS	Lower Rear Flood Lamps
BS	Tail Lamps
CS	Right Warning Lamps
DS	Left Warning Lamps

R32797

PRELIMINARY CHECKS

Step	*Sequence*	*Result*
(A1) KEY SWITCH VOLTAGE TEST: Transmission in "PARK" Key Switch "ON" 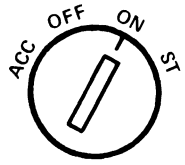	Voltmeter Pointer should be in LH green band. 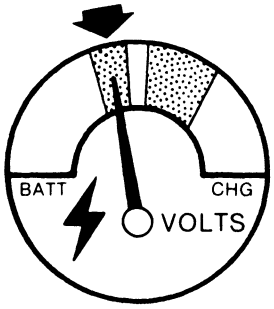	Above or in Green: Voltage OK **GO TO A2** Below Green: Voltage Low. **GO TO A3**
(A2) BATTERY LOAD TEST: Transmission in "PARK". Hold Fuel Shut-off "OUT". 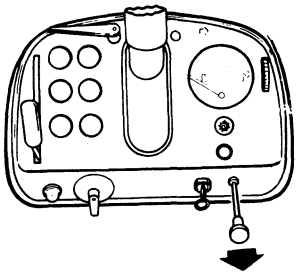	Hold key switch at "START". Voltmeter should indicate some voltage. 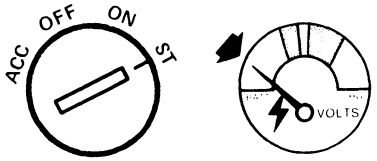	Voltage Indicated: OK. **GO TO SECTION 2 OPERATIONAL CHECKS** No Voltage Indicated: Not OK **GO TO A3**
(A3) BATTERY INSPECTION	Check both batteries for:	Correct any abnormal conditions. Then... **GO TO A4**

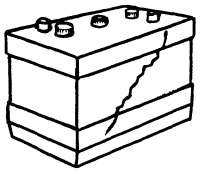
Cracked Case?

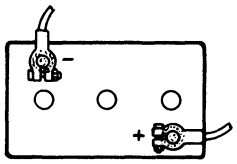
Corroded Terminals?

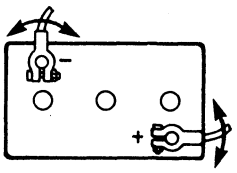
Loose Terminals or Battery Posts?

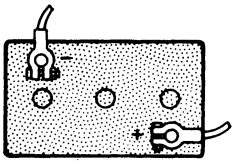
Dirty Battery?

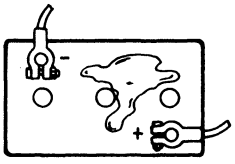
Damp Battery?

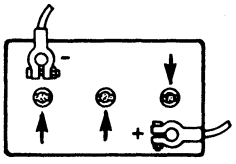
Electrolyte Level OK?

R32798

Step	Sequence	Result
A4 **BATTERY VOLTAGE TEST:** Connect battery tester (D-24001 MO) to battery cables as shown: Important: Test individually only. 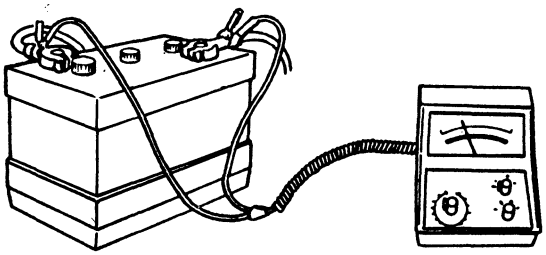	Battery Spec. (Min.) 6.2 Volts	In Spec.: **GO TO A5** Below Spec.: Charge battery. Then... **REPEAT A4** Battery will not charge. Replace. Then... **REPEAT A4**
A5 **BATTERY CONDITION TEST:** Set tester at "BAT COND" and 800 Cold Cranking Amps (CCA) at 880 for AR46116 battery or 975 for AT37931 battery. Important: Test individually only. Check battery condition scale. 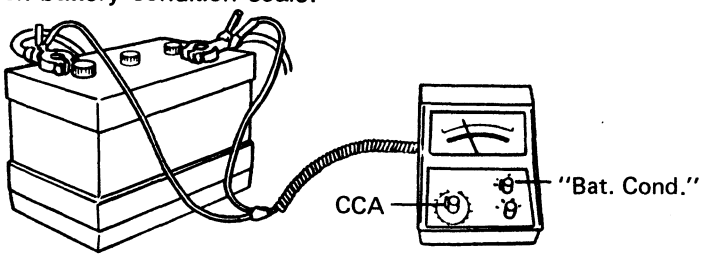 Note: If battery tester is not available, use a hydrometer or load tester. Follow manufacturers instructions. Then GO TO A7.		In green: OK **GO TO A7** In red: Not OK **GO TO A6**
A6 Remove battery cables from posts. Connect tester as shown: 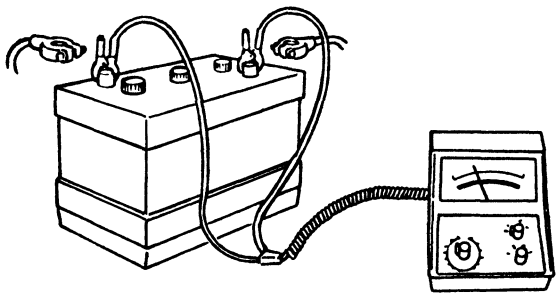	Repeat battery condition test as in A5. NOTE: Reconnect cables after test or repair.	In green: Clean cables and posts. Then... **GO TO A7** In red: Replace battery. Then... **GO TO A4**

R32799

1

Step	Sequence	Result
A7 **KEY SWITCH VOLTAGE TEST:** Key Switch "ON". 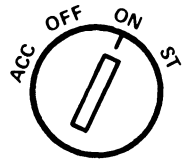	Voltmeter pointer should be in LH green band. 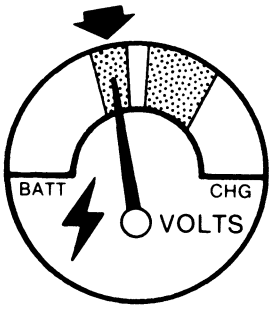	Above or in green: Voltage OK → **GO TO SECTION 2 OPERATIONAL CHECKS** Below green: Voltage Low. → **GO TO A8**
A8 Raise hood and remove LH steering support cowling as required.	Key switch "ON". Check locations indicated with (V)→ for battery voltage. 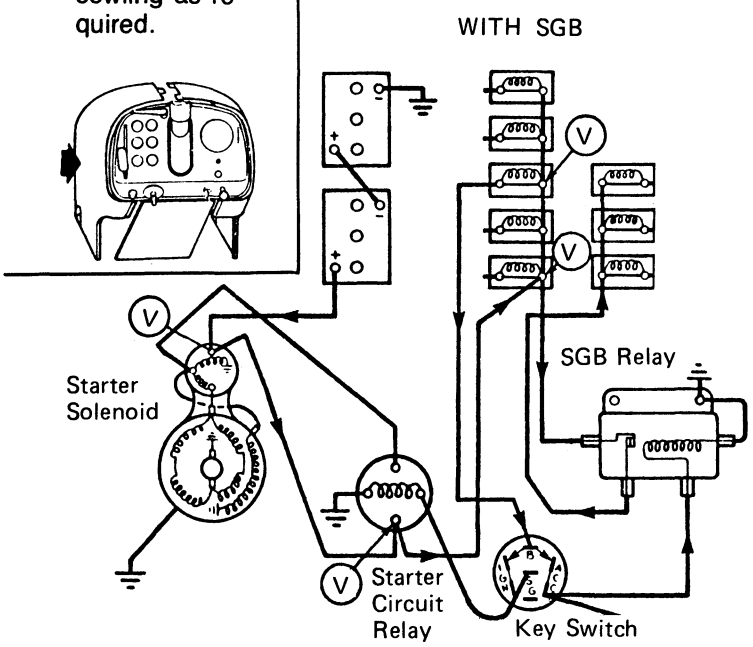	OK: → **GO TO A9** NOT OK: Repair. Then... → **GO TO A7**
A9 Key Switch "OFF". Check load side of key switch circuit breaker for battery voltage. 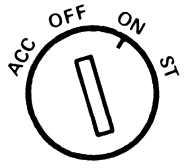 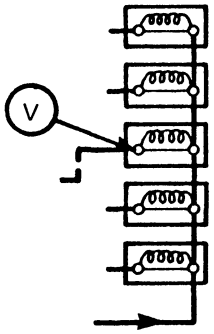		Battery Voltage: OK → **GO TO A12** Low Voltage: Replace circuit breaker. Then... → **GO TO A7** NO Light: (Probe Light Only) → **GO TO A10** Continuity to ground: → **GO TO A11**

R32800

Step	Sequence	Result
A10 (Probe light only.) Connect clip to battery voltage (+) as shown: Key switch "OFF". 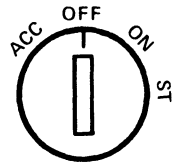	Check load side of key switch circuit breaker for continuity to ground. 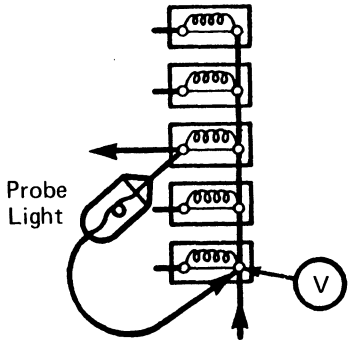	Light: **GO TO A11** No Light: Replace circuit breaker. Then... **GO TO A7**
A11 There is a "GROUNDED" circuit: 1. Between circuit breaker and key switch (or) 2. At key switch.		Repair circuit. Then... **GO TO A7**
A12 Key switch "ON". Check load side of key switch circuit breaker for battery voltage. 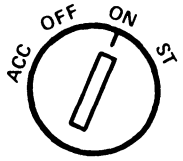 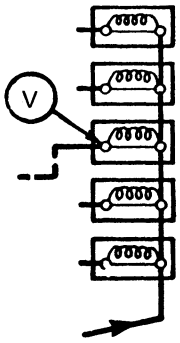		Battery voltage: OK **GO TO A17** Low voltage: Replace circuit breaker. Then... **GO TO A7** No Light: (Probe light only.) **GO TO A13** Continuity to ground: **GO TO A13**
A13 Key switch "OFF". Connect a jumper wire as shown to a known good circuit breaker. 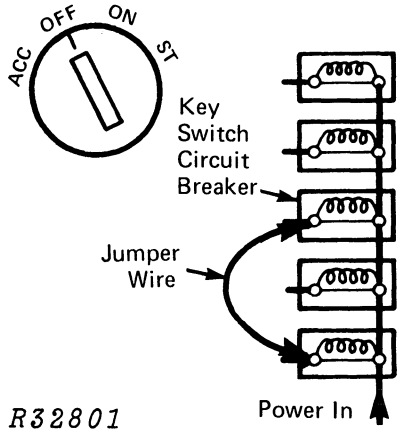 R32801	Key switch "ON". Check circuit breaker jumped from for battery voltage. 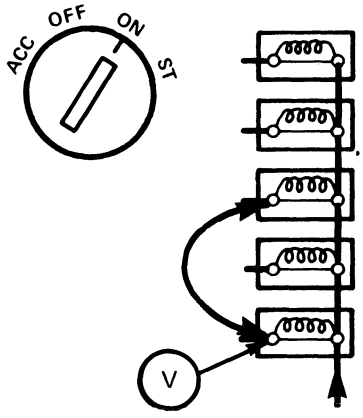	Battery voltage: Replace key switch circuit breaker. then... **GO TO A7** No Light: (Probe light only.) **GO TO A14** Continuity to ground. **GO TO A14**

1

Step	*Sequence*	*Result*
A14 There is a "GROUNDED" circuit at or after key switch. Turn key switch to "ACC" position. 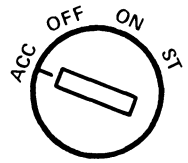	Recheck load side of key switch circuit breaker for battery voltage. 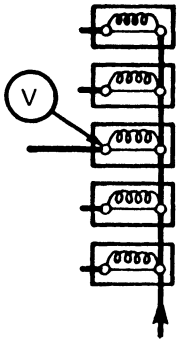	Battery voltage: **GO TO A15** No voltage: (Probe light only.) **GO TO A16** Continuity to ground: **GO TO A16**
A15 There is a "GROUND" in the "IGN" circuit from the key switch. 1. Between Ⓐ and Ⓑ 2. Between Ⓐ and Ⓒ (or) 3. Between Ⓒ and F terminal.	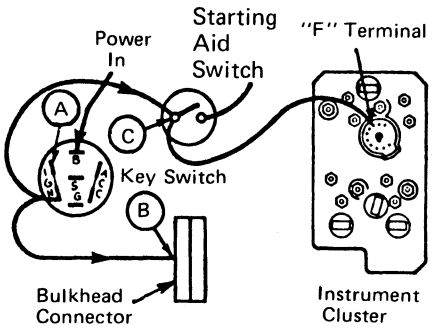	Repair circuit. Then... **GO TO A7**
A16 There is a "GROUND" in the "ACC" circuit from the key switch. 1. Between Ⓐ and Ⓑ (or) 2. Between Ⓐ and Ⓒ	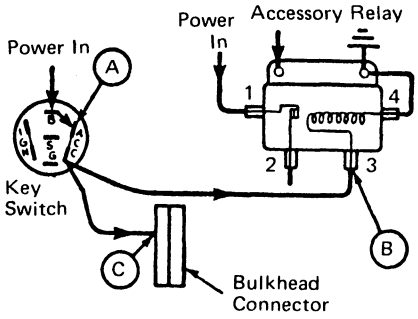	Repair circuit. Then... **GO TO A7**
A17 Remove RH. steering support cowling. 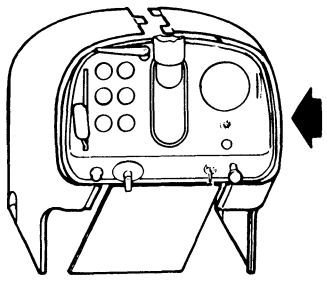	Key switch "ON". Check "B" terminal of key switch for battery voltage. 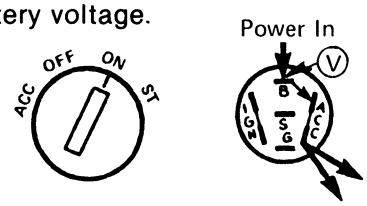	Battery voltage: OK **GO TO A19** Low or no voltage: **GO TO A18**

R32802

Litho in U.S.A.

Step	Result
A18 There is "HIGH RESISTANCE" or an "OPEN" circuit between key switch circuit breaker and key switch "B" terminal (Red wire). 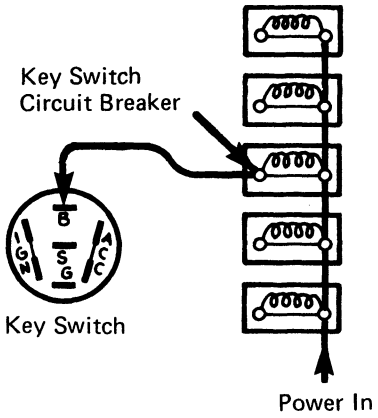	Repair circuit. Then... **GO TO A7**
A19 There is "SUFFICIENT" voltage at the key switch "B" terminal, but the voltmeter does not indicate correctly.	**GO TO SECTION 5**

R32803

1

OPERATIONAL CHECK OF ALL SWITCHES AND ELECTRICAL COMPONENTS

(Perform all operational checks before and after repair.)

Circuit and Sequence	*Normal Operation*					*Result*
A. **LIGHTING CIRCUIT:** Key switch "OFF".						
1. Dome lamp and door switch: SGB door "OPEN".						
SGB door "CLOSED".						
2. Dome lamp and dome lamp switch: SGB door "CLOSED" and dome lamp switch "ON".						
3. Turn signal switch: Lever "UP".						
Lever "DOWN".						
4. Light switch position:	W	H	H	F	F	
Dimmer switch position:		Hi	Lo	Hi	Lo	
8430 (-005928) 8630 (-008118) Warning lamps	X	X	X			
Tail lamps		X	X			
Instrument & console		X	X	X	X	
Head lamps		X	X	X	X	
High beam indicator lamp		X		X		
Front flood lamps		X		X	X	If not OK, see Section 6, after operational checks. **GO TO B**
Rear upper flood lamps				X		
Lower rear flood lamps (without auxiliary light switch)				X	X	
8430 (-005928) 8630 (-008118) (with auxiliary light switch)						
Main light switch position		F	F	F		
Auxiliary light switch position		W	H	F		
Rear upper flood lamps		X	X			
Rear lower flood lamps			X	X		

(Continued)

Litho in U.S.A.

8430 (005928-) 8630 (008118-) Light switch position	W H H F F	
Dimmer switch position	Hi Lo Hi Lo	
Warning lamps	X X X	
Tail lamps	X X	
Instrument and console lamps	X X X X	
Head lamps	X X X X	
High beam indicator lamp	X X	
Front flood lamps	X X X X	
Rear upper flood lamps	X	
Rear lower flood lamps	X X	
B. **HORN AND LIGHTER CIRCUITS:** Key switch "ON" (early models) Key switch "OFF" (later models) 1. Lighter pushed "IN". 2. Horn switch held "ON"	Lighter element heats. Horn(s) sound.	If not OK, see Section 8 after operational checks. **GO TO C**
C. ACCESSORY CIRCUITS: (SGB with two-speed blower switch.) Key switch "ON". Engine "STOPPED". 1. L.H. and R.H. wiper switches and motors: Switch momentarily to "SLOW". Switch momentarily to "FAST".	Wiper motors operate at slow speed. Wiper motors operate at a faster speed.	

R32805

Circuit and Sequence	Normal Operation	Result
2. Blower switch and motors: Blower switch at "SLOW". Blower switch at "FAST".	 Both blower motors (connected in series) operating at a slow speed. Both blower motors (connected in parallel) operating at a fast speed.	
3. Cooling Temperature Control switch and air-conditioning compressor clutch. NOTE: If ambient temperature is below 35°F., (2°C) clutch will not engage. Blower switch at "FAST". Turn temperature control switch to "MAXIMUM" cooling.	 Listen for audible click of compressor during engagement.	If not OK, see Section 7-A1, after operational checks. **GO TO D**
(SGB with three-speed blower switch.) Key switch 'ON". Engine "STOPPED". 1. L.H. and R.H. wiper switches and motors: Switches momentarily to "SLOW". Switches momentarily to "FAST".	 Wiper motors operate at slow speed. Wiper motors operate at a faster speed.	
2. Blower switch and motor: Blower switch at "SLOW". Repeat at "MEDIUM and FAST".	 Blower motor operates at "SLOW, MEDIUM and FAST" speeds.	
3. Cooling Temperature Control switch and air-conditioning compressor clutch. NOTE: If ambient temperature is below 35°F., (2°C) clutch will not engage. Blower switch at "FAST". Turn temperature control switch to "MAXIMUM" cooling.	 Listen for audible click of compressor during engagement.	If not OK, see Section 7-B1, after operational checks. **GO TO D**

R32806

Circuit and Sequence	*Normal Operation*	*Result*
D. **INSTRUMENT CLUSTER CIRCUITS:** Key switch "ON". Engine "STOPPED". 1. Observe the following cluster gauges: a. Voltmeter: b. Fuel gauge: c. Temperature gauge: d. Oil pressure gauge: e. Clutch lube gauge: 2. Observe indicators with key switch at the following positions: Key switch "ON". ENGINE "STOPPED". Key switch at "START". Engine "STOPPED or CRANKING".	 Needle in L.H. green band. Indicating other than extreme empty or full. Indicating other than extreme HOT. Indicating zero pressure. Indicating zero pressure. Trans. oil indicator / Trans. lube indicator / Air-cleaner indicator ON / OUT / OUT* ON / ON / ON	If not OK, see Section 5, after operational checks. **GO TO E**
*Use a jumper wire to ground temperature and vacuum switches. Indicator lamps should come "ON".		
E. **STARTING CIRCUIT:** 1. Transmission "IN GEAR". Key switch at "START". 2. Key switch at "START". Shift lever to "NEUTRAL". 3. Transmission at "NEUTRAL". Engine "RUNNING". Briefly tap starting aid switch. 4. Transmission "IN GEAR". Push starting aid switch.	Starter should not crank engine Starter should crank engine Starting fluid should be flowing into intake manifold. Starting fluid should not be flowing into intake manifold.	If not OK, see Section 3, after operational checks. **GO TO F**

R32807

2

	Normal Operation	*Result*
F. ENGINE "RUNNING" CHECKS. Key switch "ON"		
2. Instrument circuit: a. Fuel gauge.	Voltmeter needle at R.H. green band at 1500 rpm.	If not OK, see Section 4.
b. Temperature gauge.	Needle indicating other than extreme empty or full.	If not OK, see Section 5.
c. Oil pressure gauge.	Needle indicating other than HOT.	
d. Clutch lube gauge.	Needle indicating pressure above RED danger zone.	
3. Indicator lamps: a. Transmission oil indicator lamp.	Needle above black line at 2000 RPM.	If not OK, see Section 5, after operational checks. **GO TO G**
b. Air-cleaner indicator lamp.	Lamp out.	
c. Transmission lube indicator lamp.	Lamp out.	
4. Starting circuit: Pull fuel shut-off knob "OUT" to stop engine.	Lamp out.	
	Starter should not be operating. NOTE: If starter is operating: 1. Turn key switch "OFF". 2. Hold fuel shut-off "OUT" and place transmission in gear.	
G. RADIO AND TAPE PLAYER CIRCUIT: If not equipped, go to H. Key switch "ON". Radio switch "ON".		
1. Select AM and turn tuning knob to a station. Repeat check on FM (if equipped).	Radio operating.	
2. If equipped with a tape player, INSERT A TAPE CARTRIDGE.	Tape player operating.	If not OK, see Section 9, after operational checks. **GO TO H**
H. ALL OPERATIONAL CHECKS NORMAL?		YES — Tractor ready for field operation. NO — Go to appropriate section for repair.

R32808

STARTING CIRCUIT

Step	Sequence	Result
(A1) **OPERATIONAL CHECK OF STARTING CIRCUIT:** Place transmission in 1st gear. 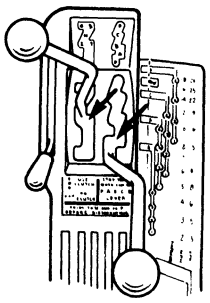	Depress clutch pedal. Turn key switch to "START" position. Observe starter operation. 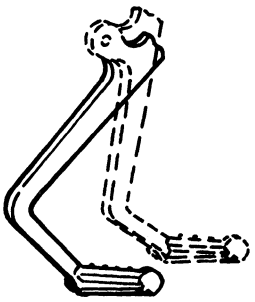 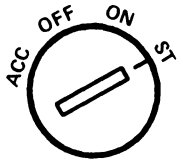	Engine does not crank: OK **GO TO A2** Engine cranks in gear. NOT OK: **GO TO F1**
(A2) Shift to "PARK".	Turn key switch to "START". Observe starter operation. 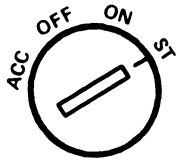	Engine cranks: OK **GO TO A3** Engine does not crank properly: **GO TO A5**
(A3) Transmission in "PARK". Hold fuel shut-off "OUT". Key at "START". 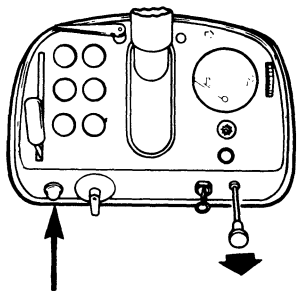 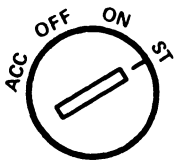 Key Switch	With engine cranking, momentarily hold starting aid switch "IN". 1. Starting fluid should be flowing into intake manifold. 2. Starter should continue to crank engine. Engine will normally start if above 40°F (5°C).	Operation OK: **GO TO SECTION 2** Operation Not OK: **GO TO A4**

R32809

Step	Sequence	Result
(A4)	1. Starting aid will not inject starting fluid.	GO TO H1
	2. Engine cranks but stops cranking when starting aid switch is pushed "IN".	GO TO J1
(A5)	The 8430 starter is shown in the following steps. Review tractor model and type of starter used for differences in lead and terminal locations.	

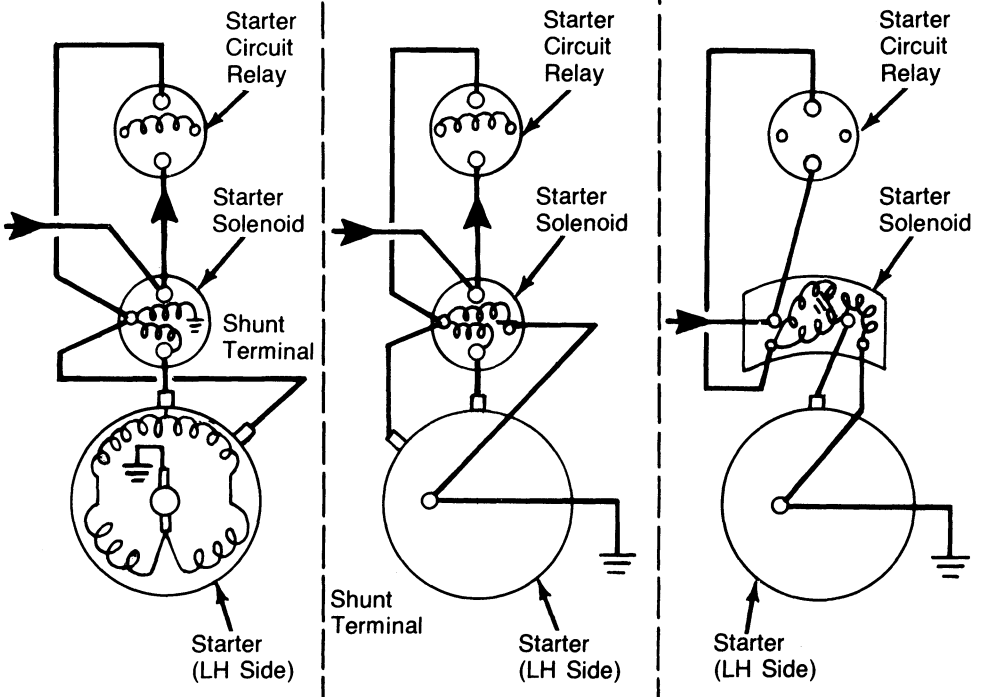

R32810

GO TO A6

Step	Sequence	Result
A6 The following STARTING CIRCUIT problems will direct you to the DIAGNOSING SEQUENCE for that problem: 1. Starter operates, but engine does not crank. — — —

Step	*Sequence*		*Result*
D1 **PROBLEM:** **Starter Solenoid Does Not Operate With Transmission In "PARK".** Battery voltage at 12.4 volts (Min.).	Disconnect lead from neutral start switch. Connect a multimeter as shown to check continuity across switch. 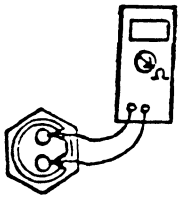	Transmission in "PARK". Observe meter for 0.3 ohms (Max.).	In spec.: **GO TO D3** Out of spec: **GO TO D2**
D2 Causes of no continuity across the neutral start switch terminals are: 1. Corroded lead and switch terminals. 2. Excessive transmission shifter shaft endplay. (spec. 0.001 to 0.004″). 3. Switch ball corroded. 4. Improper switch shim adjustment. 5. Improper shift linkage adjustment.			Adjust or repair. Then... **GO TO A1**
D3 Connect tester to white lead of neutral start switch as shown: 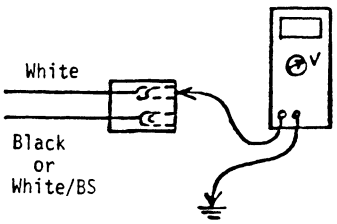	Hold key switch at "START". Hold fuel shut off "OUT". Check white lead for battery voltage. If both leads are white, only one lead will have voltage. NOTE: Reconnect lead after testing or repair.		Battery voltage OK: **GO TO D7** Low voltage **GO TO D6** No voltage (Probe light only) **TO TO D4** Continuity to ground **GO TO D5**
D4 (Probe light only) Key switch "ON". Connect tester clip to source of battery voltage (+).	Check white lead of neutral start switch for continuity to ground. 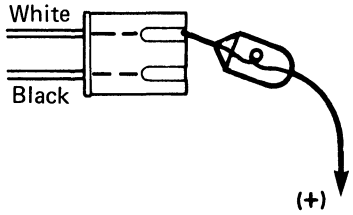		Light **GO TO D5** No light **GO TO D6**

R32812

Step	*Sequence*	*Result*
D5 There is a "GROUNDED" circuit: 1. at key switch 2. between (A) and (B) (or) 3. at starter relay.	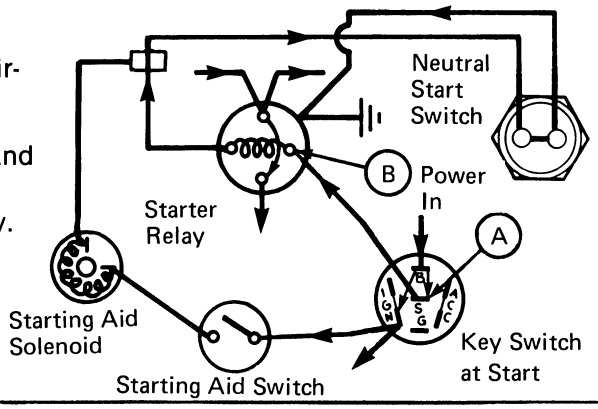	Repair circuit. Then... **GO TO A1**
D6 There is "HIGH RESISTANCE" or an "OPEN" circuit: 1. between key switch "B" and "S" terminals. 2. between (A) and (B) 3. between starter relay terminals (B) and (C) (or) 4. between (C) and (D)	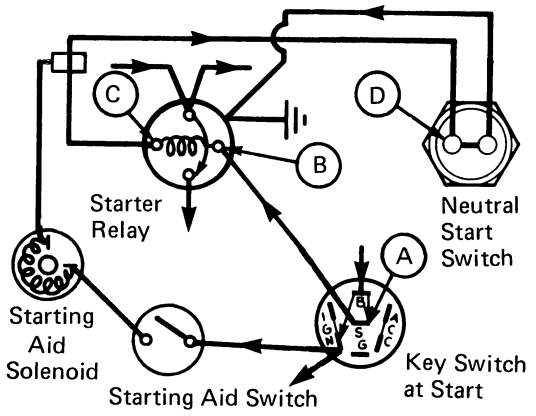	Repair circuit. Then... **GO TO A1**
D7 With transmission in "PARK" and lead connectred to neutral start switch, connect tester to white lead as shown. 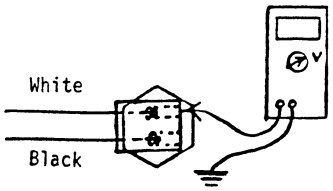	Hold fuel shut-off "OUT". Hold key switch at "START". Check white lead for voltage. NOTE: Reconnect lead after testing or repair.	No voltage. Good continuity to ground **GO TO D9** Voltage **GO TO D8**
D8 There is "HIGH RESISTANCE" or an "OPEN" in the ground circuit between neutral start switch and starter relay (black wire (A) to (B)).	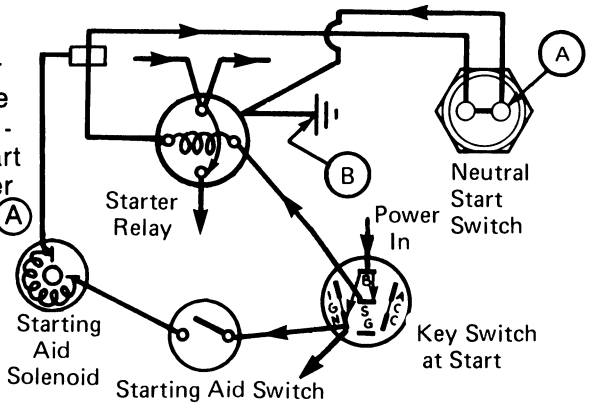	Repair circuit. Then... **GO TO A1**

R32813

Step	*Sequence*		*Result*
D9 Connect voltmeter to starter solenoid terminal as shown: 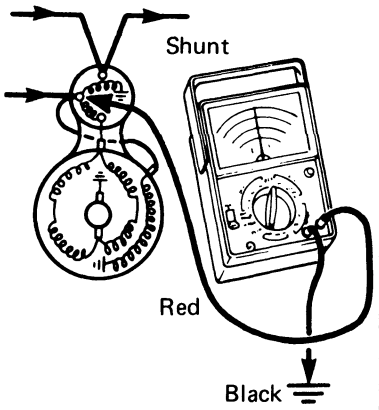	Hold fuel shut-off "OUT". Hold key switch at "START". Observe meter reading. 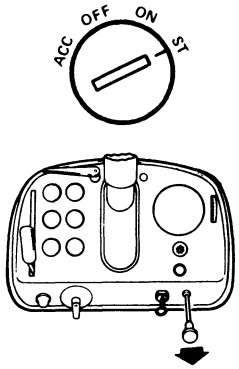	Spec. (Min.) 8.5 volts	8.5 volts or more: **GO TO D11** Below 8.5 volts: **GO TO D10**
D10 There is "HIGH RESISTANCE" or an "OPEN" circuit: 1. between (A) and (B) 2. between (B) and (C) (or) 3. between relay (C) and (D)	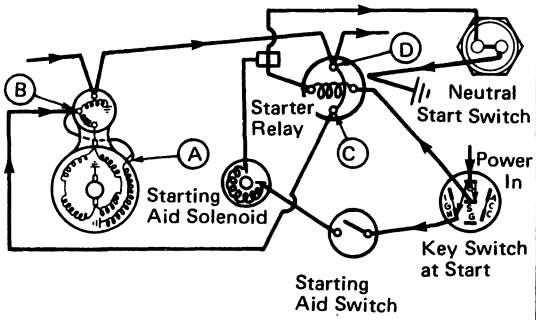		Repair circuit. Then... **GO TO A1**
D11 Connect voltmeter to starter terminal as shown: 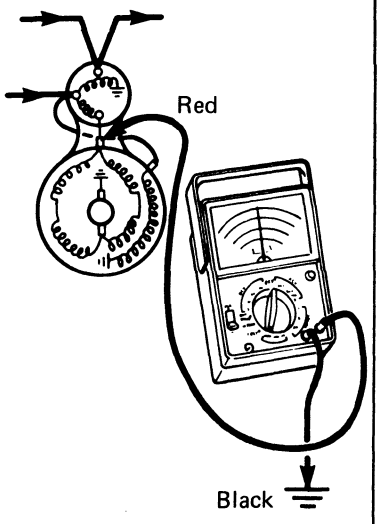	Hold fuel shut-off "OUT". Hold key switch at "START". Observe meter reading. 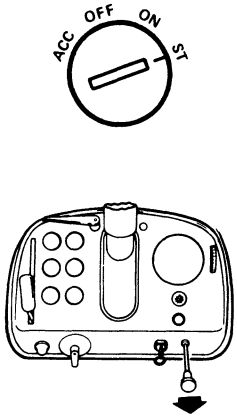	Spec. (Min.) 8.5 volts	8.5 volts or more: **GO TO D13** Below 8.5 volts: **GO TO D12**

R32814

Step	*Sequence*	*Result*
D12 There is "HIGH RESISTANCE" or an "OPEN": 1. In pull-in winding (A) or 2. at solenoid contacts (B)	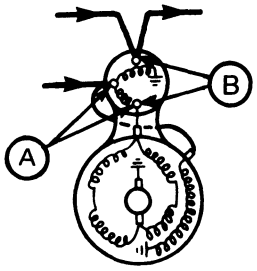	Repair or replace solenoid. Then... **GO TO A1**
D13 There is "HIGH RESISTANCE" or an "OPEN" circuit in the following: 1. field 2. armature (or) 3. brushes	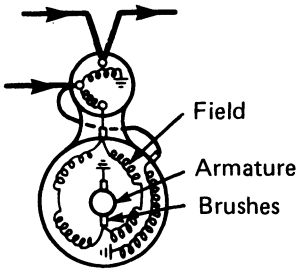	Repair starter. Then... **GO TO A1**
E1 **PROBLEM:** **Engine Cranks Slowly:** Battery voltage at 12V (Min.) Transmission in "PARK" Connect voltmeter as shown: NOTE: Starter terminal will have battery voltage before cranking. Switch meter to lowest scale during cranking.	Hold fuel shut-off "OUT". Turn key switch to "START". Crank engine and observe voltmeter for voltage reading. 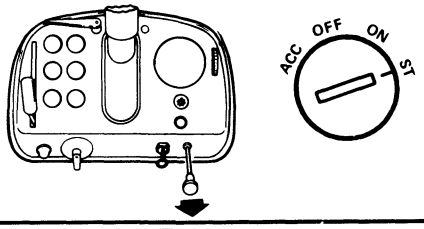 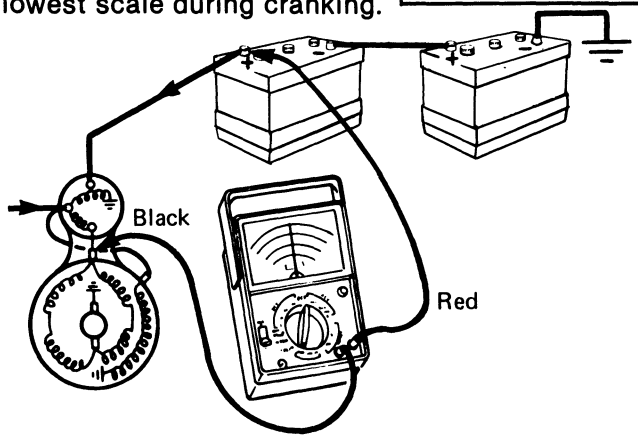	0 to 1.2 volt: In Spec. **GO TO E3** More than 1.2 volt. Out of Spec. **GO TO E2**
E2 Causes of voltage drop are: 1. Loose or corroded battery cable connections. 2. Loose connections at starter solenoid and starter (or) 3. Corroded or eroded starter solenoid relay contact disk.		Repair. Then... **GO TO A1**

R32815

Step	*Sequence*	*Result*
E3 Connect voltmeter to (-) battery post and starter housing as shown:	Hold fuel shut-off "OUT". Turn key switch to "START". Crank engine and observe voltmeter for voltage reading. 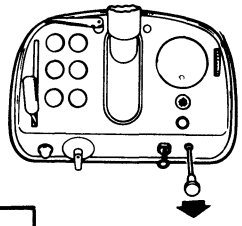 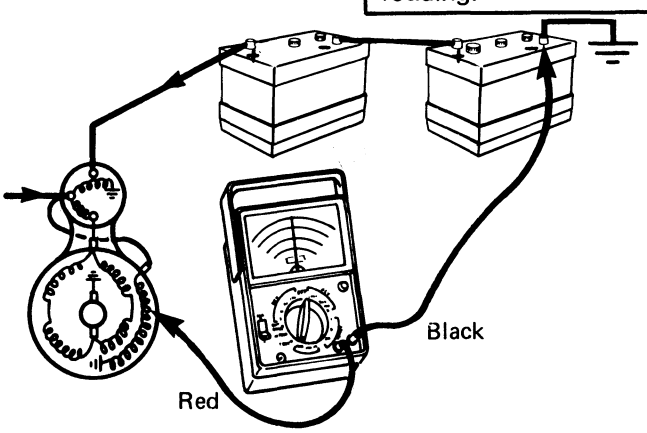 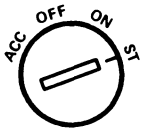	0 to 0.5 volt: In Spec.: **GO TO E5** More than 0.5 volt Out of Spec. **GO TO E4**
E4 Reasons for voltage reading: 1. Loose or corroded battery ground cable connections (or) 2. Poor contact of starter housing to engine block		Repair. Then... **GO TO A1**
E5 Connect voltmeter to starter terminal as shown. 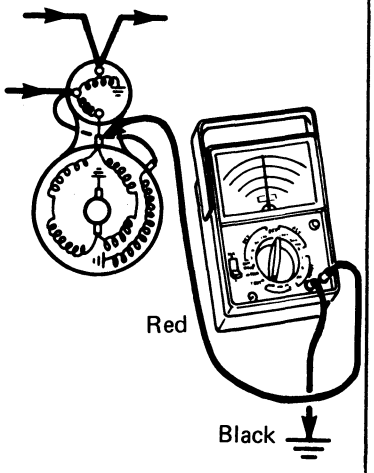	Hold fuel shut-off "OUT". Hold key at "START". Observe meter voltage reading. 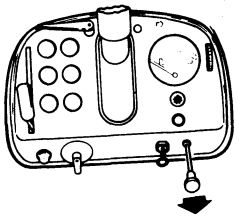	Spec (Min.) 9.0 volts
		8.5 or more volts **GO TO E7** Less than 8.5 volts **GO TO E6**
E6 One or more of the following exists: 1. Worn armature shaft bushings (armature contacting pole shoes) 2. Worn drive pinion or flywheel ring gear 3. Shorted armature or field windings 4. Shorted shunt winding (John Deere ND only) 5. Battery cold cranking amp (ampere hour) rating low (or) 6. Starter cranking capacity low.		Repair. Then... **GO TO A1**

R32816

Step	*Sequence*	*Result*
(E7) One or more of the following internal starter malfunctions exists: 1. High resistance at brushes 2. Open armature (or) 3. Open field winding.		Repair starter. Then... **GO TO A1**
(F1) **PROBLEM:** **Engine Cranks "IN GEAR".** Disconnect lead from neutral start switch. 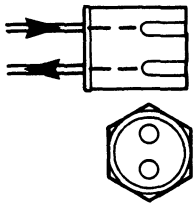	Hold fuel shut-off "OUT". Turn key switch to "START". Observe starter for cranking. 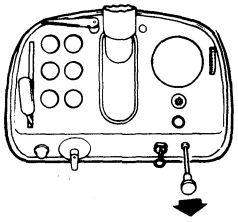 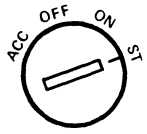	Engine does not crank. **GO TO F2** Engine cranks. **GO TO F3**
(F2) The neutral start switch is: 1. Improperly adjusted (add shims) or 2. Switch ball is corroded or stuck (replace)		Repair. Then... **GO TO A1**
(F3) There is a "GROUNDED" circuit. 1. at starting aid solenoid 2. between (A) and (B) 3. between (F) and (C) 4. between (D) and (E) NOTE: If a ground exists between D and E , the engine will stop cranking when starting aid switch is pushed "IN".	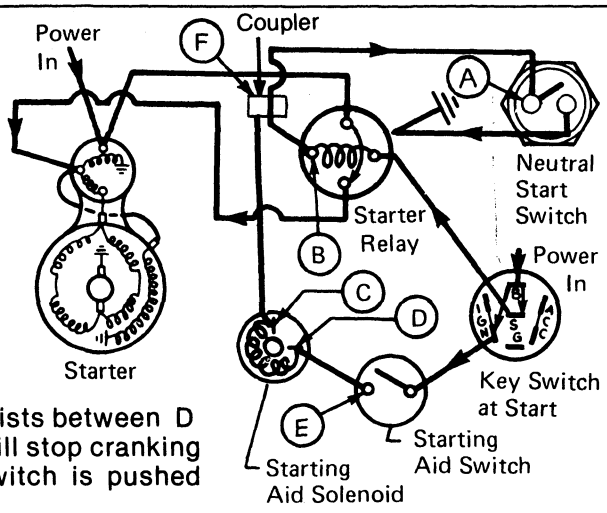	Repair circuit. Then... **GO TO A1** *R32817*

Step	*Sequence*	*Result*
G1 **PROBLEM:** **Starter continues to operate after engine starts or fuel shut-off pulled out.** **(Delco and John Deere ND)**	Holding fuel shut-off "OUT", turn key switch "OFF". Observe starter operation.	Starter operation "STOPPED". Replace key switch then... **GO TO A1** Starter "operating". **GO TO G2**
G2 Holding fuel shut-off "OUT", place transmission in any gear. Observe starter operation.	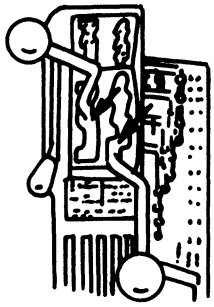	Starter operation "STOPPED". Replace starter circuit relay. Then... **GO TO A1** Starter "operating". **GO TO G3**
G3 (John Deere ND only) 1. IMMEDIATELY disconnect battery ground (or) 2. If a jamper wire is available, connect one end to solenoid pull-in winding and strike other end of jumper to ground.	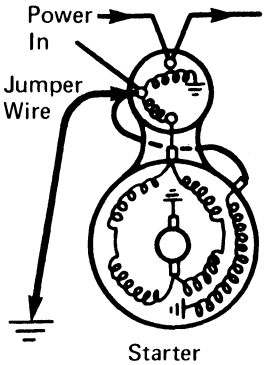	**GO TO G4**
G4 Remove strap between solenoid and starter terminals. Connect voltmeter as shown: 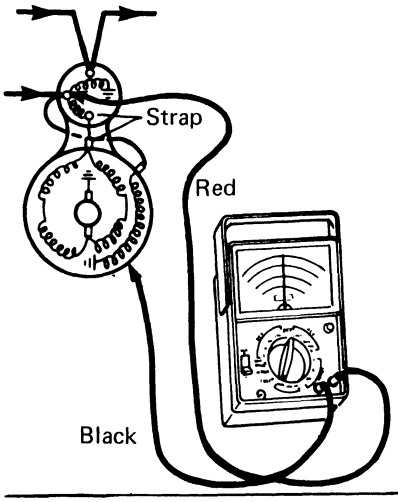	Hold key switch at "START". Observe meter reading. 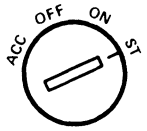	Spec. (Min.) 11.0 volts	11.0 volts or more: Repair starter shunt. Then... **GO TO A1** Below 11.0 volts: Repair shunt lead. Then... **GO TO A1**

R32818

(H1) PROBLEM:

Engine Starts, But Starting Aid Will Not flow Starting Fluid.

Check the following possible causes:

1. Loose can bail.
2. Empty starting fluid can.
3. Insufficient propellent in starting fluid can.
4. Stuck solenoid plunger (or)
5. Plugged starting aid line or orifice to manifold

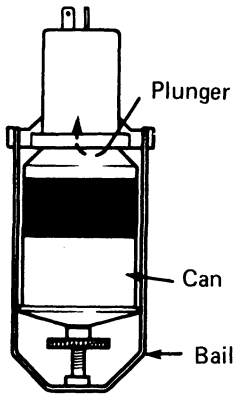

OK: **GO TO H2**

Not OK: Correct. Then... **GO TO A1**

(H2) Remove starting fluid can. Connect tester to starting aid solenoid terminal with a jumper wire as shown.

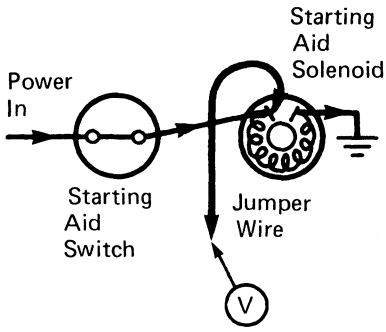

R32819

Transmission in "PARK". Hold fuel shut-off "OUT".

Key switch "ON". Hold starting aid switch "IN". Observe tester for battery voltage.

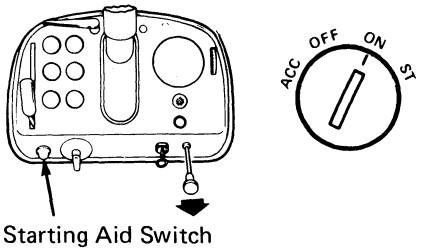

NOTE: If no voltage at first terminal, check other terminal of solenoid.

Battery voltage OK: **GO TO H4**

No voltage: (Probe light only) **GO TO H3**

Low voltage or continuity to ground. **GO TO H3**

3

Step	*Sequence*	*Result*
H3 There is "HIGH RESISTANCE" or an "OPEN" circuit: 1. at key switch 2. at starting aid switch 3. between (A) and (B) (or) 4. between (C) and (D)	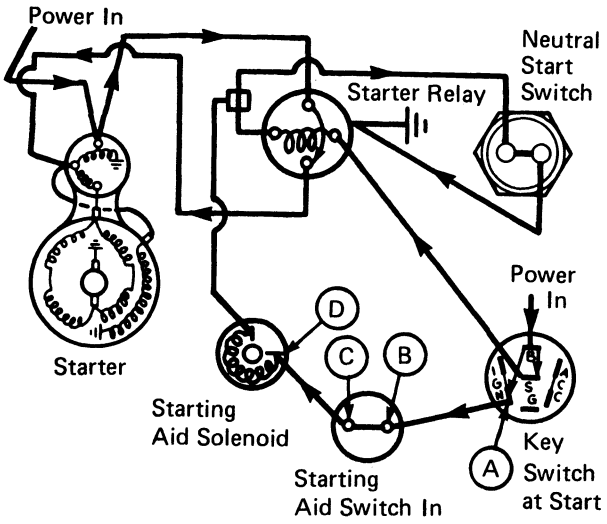	Repair ciruit. Then... **GO TO A1**
H4 Connect tester to other terminal of starting aid solenoid with a jumper wire as shown: 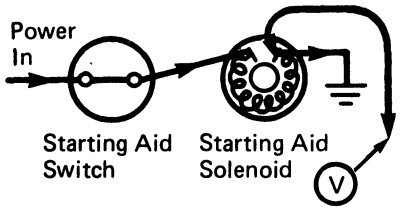	Transmission in "Park". Hold fuel shut-off "OUT". Key switch "ON". Hold starting aid switch "IN". Observe tester for voltage. 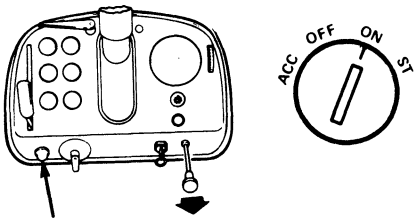	Continuity to ground. Replace solenoid. Then... **GO TO A1** No voltage: (Probe light only) **GO TO H5** Voltage: **GO TO H6**
H5 (Probe light only) Connect tester clip to source of battery voltage (+). 	Check same terminal of starting aid solenoid as in H4 for continuity to ground.	No Light: **GO TO H6** Light: Replace solenoid. Then... **GO TO A1**

R32820

Step	Sequence	Result
(H6) There is "HIGH RESISTANCE" or an "OPEN" circuit between the starting aid solenoid (A) and starter circuit relay (B)	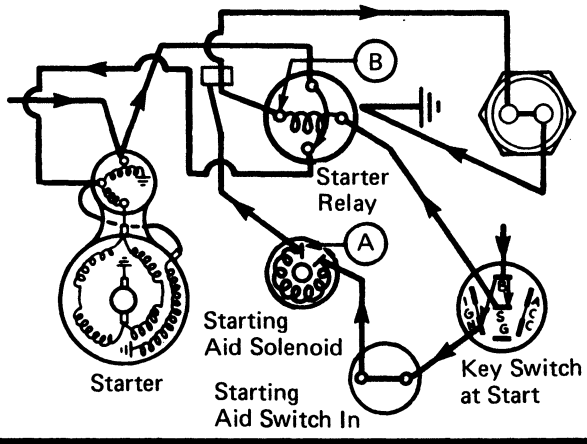	Repair circuit. Then... GO TO A1
(J1) **PROBLEM:** **Engine Cranks But Stops Cranking When Starting Aid Switch is Pushed "IN".**	Hold fuel shut-off "OUT". Key switch "ON". Hold starting aid switch "IN". 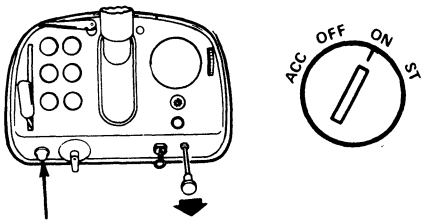 Check for battery voltage.	Voltage: Replace shorted starting aid solenoid. Then... GO TO A1 No voltage: (Probe light) GO TO J2 Continuity to ground: GO TO J2
Disconnect lead from neutral start switch. Connect tester to white lead terminal of neutral start coupler with a jumper wire. 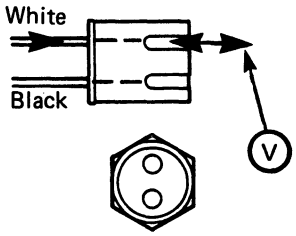 NOTE: Reconnect lead after testing or repair.		
(J2) There is a "GROUNDED" circuit: 1. at starting aid solenoid (or) 2. Between (A) and (B)	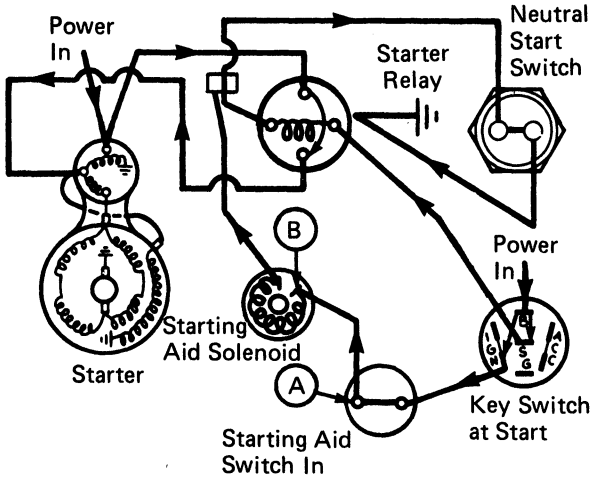	Repair circuit. Then... GO TO A1

R32821

CHARGING CIRCUIT

Step	*Sequence*	*Result*
(A1) **OPERATIONAL CHECK OF CHARGING CIRCUIT:** Key switch "ON". Engine "STOPPED". All other switches "OFF".	Check voltmeter needle position. 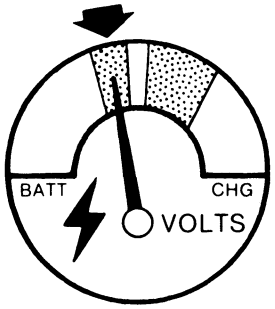	At LH green band. **GO TO A2** Below LH green band. **GO TO SECTION 1**
(A2) Key switch "ON". Engine at 1500 rpm. All other switches "OFF".	Check voltmeter needle position. 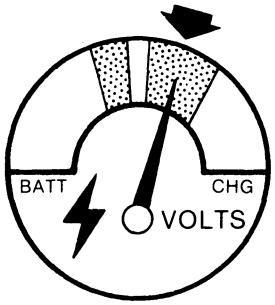	At RH green band. **GO TO A3** Below Black Band or above RH green band. **DELCO GO TO B1** **JOHN DEERE ND GO TO C1**
(A3) Key switch "ON". Engine at 2000 rpm. Turn all lights and accessories "ON" except wipers.	Check voltmeter needle position. 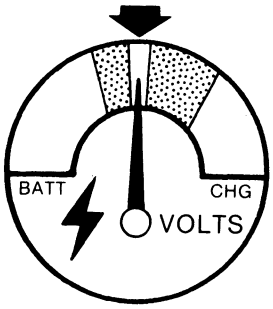	In or above black band. System normal. **GO TO SECTION 2** Below black band: **DELCO GO TO B1** **JOHN DEERE ND GO TO C1**

4

R32822

DELCO REMY ALTERNATOR

Step	Sequence		Result
B1 UNDER-CHARGED BATTERIES: (Voltmeter needle below black band at 2000 rpm. OR OVERCHARGED BATTERIES: (Voltmeter needle above RH green band at 2000 rpm) 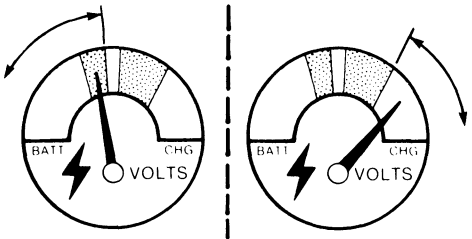	Check connections at alternator "BAT" and voltage regulator terminals. 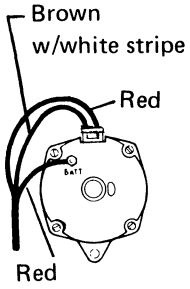	Check alternator pulley and belt tension. 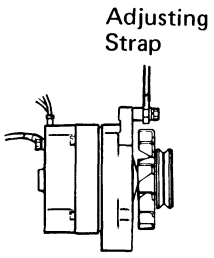	Correct abnormal condition Then... **GO TO B2**
B2 **ALTERNATOR — BATTERY CIRCUIT TEST:** Key switch "OFF". Engine "STOPPED". Battery voltage 12 volts (Min.)	Connect voltmeter to alternator "BAT" terminal as shown: 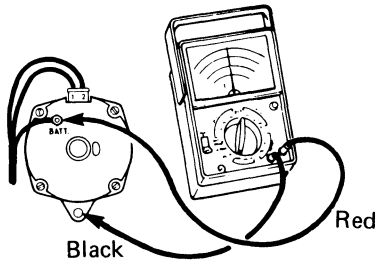	Spec. (Min.) 12 volt	OK: **GO TO B4** Not OK: **GO TO B3**
B3 There is high resistance or an "OPEN" circuit: 1. Between (A) and (B) 2. between (B) and (C) (or) 3. between (C) and (D)	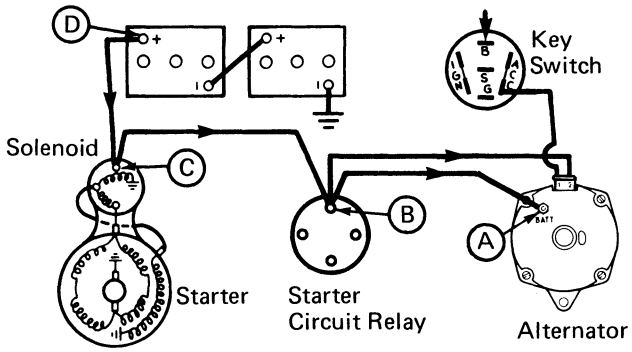		Repair circuit. Then... **GO TO B2**
B4 **NO. 2 VOLTAGE REGULATOR TERMINAL CIRCUIT TEST:** Key switch "OFF". Engine "STOPPED".	Connect voltmeter to No. 2 regulator terminal as shown: 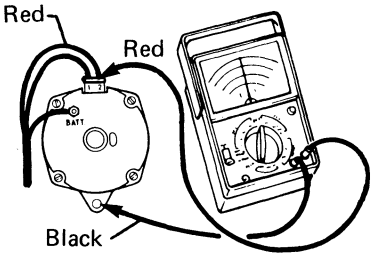	Spec. (Min.) 12 volt	OK: **GO TO B6** Not OK: **GO TO B5**

R32823

Step	Sequence		Result
B5 There is an "OPEN" circuit between No. 2 voltage regulator terminal Ⓐ and starter circuit relay terminal Ⓑ.	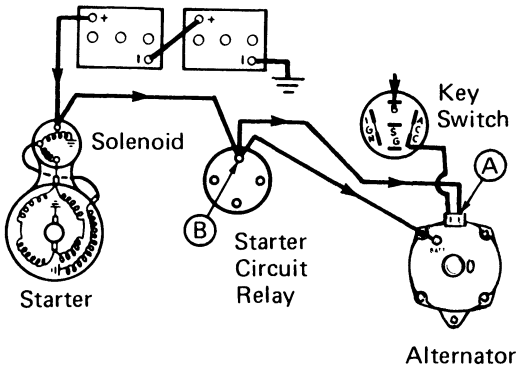		Repair circuit. Then... **GO TO B4**
B6 **NO. 1 VOLTAGE REGULATOR TERMINAL CIRCUIT TEST:** (Resistance wire, 10-15 ohms.) Key switch "ON". Engine "STOPPED".	Connect voltmeter to No. 1 regulator terminal as shown: 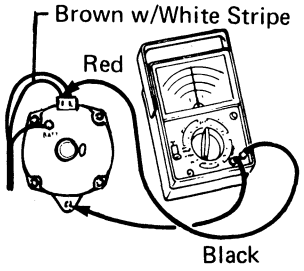	Spec. 2-9 volts Note: voltage regulator coupler must be connected.	In Spec. **GO TO B11** Below 2 volts **GO TO B7** Above 9 volts **GO TO B8**
B7 There is an "OPEN" circuit: 1. at key switch "ACC" terminal. Ⓒ 2. at bulkhead connector Ⓑ 3. between Ⓐ and Ⓑ (or) 4. between Ⓑ and Ⓒ	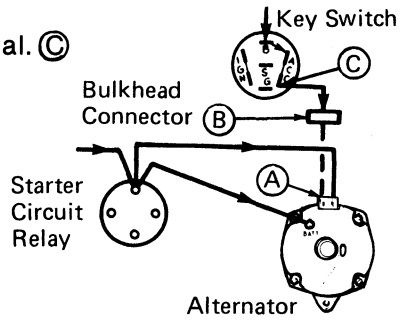		Repair circuit. Then... **GO TO B6**
B8 Key switch "ON". Engine "STOPPED". Connect voltmeter as shown. Ground field brush through test hole. Observe voltmeter reading. 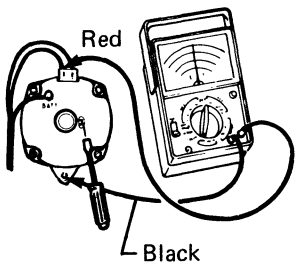		Spec. 2-9 volts	In Spec. **GO TO B9** Above Spec. **GO TO B10**

R32824

Step	Sequence		Result
B9	One or more of the following causes exist: 1. loose brush holder screws: a. voltage regulator not properly grounded b. brush terminal not properly contacting voltage regulator terminal. 2. voltage regulator has an "OPEN" circuit		Repair. Then... **GO TO B6**
B10	One or more of the following causes exist: 1. Rotor slip rings dirty 2. Brushes worn or broken 3. Rotor field winding has an "OPEN" circuit		Repair. Then... **GO TO B2**
B11	**ALTERNATOR OUTPUT VOLTAGE TEST:** Connect voltmeter as shown. Key switch "ON". Engine at 1500 rpm. Observe voltmeter reading. 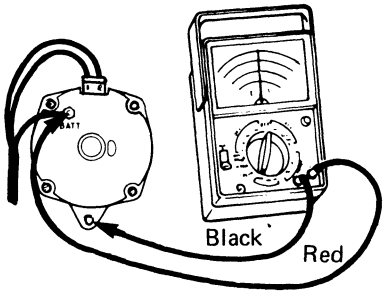	Spec. 13-15 volts	In Spec. **GO TO B17** Below 13 volts **GO TO B13** Above 15 volts **GO TO B12**
B12	The following are causes of high voltage: 1. "GROUNDED" between brushes and voltage regulator. 2. Internally "GROUNDED" voltage regulator (or) 3. "GROUNDED" rotor field circuit.		Repair Alternator. Then... **GO TO B2**
B13	Alternator output voltage is low: Connect voltmeter as shown. Key switch "ON". Engine at 1500 rpm. Ground field brush through test hole. 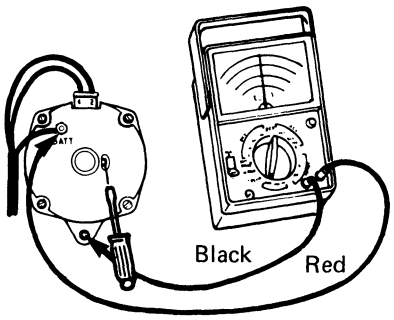	Voltmeter needle should go above 15 volts. Note: Do not allow voltage to go above 16.5 volts.	Above 15v, replace voltage regulator. Then... **GO TO B2** Below 15v. Continue testing... **GO TO B14**
B14	**FIELD CURRENT DRAW TEST:** Key switch "OFF". Engine "STOPPED". Connect ammeter as shown. Obseve meter reading. 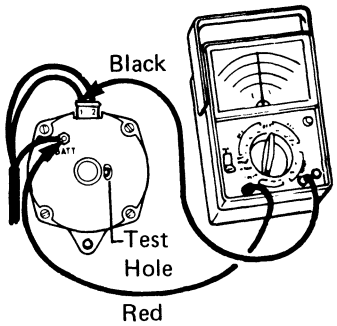	Spec. 3.0-3.6 amps at 12-12.5v Note: If no amp draw, ground field brush through test hole. If now an amp draw, replace bad regulator when repairing alternator.	In Spec. **GO TO B16** Below Spec. **GO TO B15** Above Spec.. Replace rotor. Then... **GO TO B2**

R32825

4

Step	Sequence		Result
B15 If field current draw was below spec., one or more of the following causes exists: 1. Rotor slip rings dirty. 2. Brushes worn or broken. 3. Rotor field winding "OPEN".			Repair alternator. Then... **GO TO B2**
B16 One or more of the following causes exist: 1. Output "BAT." terminal loose. 2. Stator "SHORTED" or "GROUNDED". 3. Diode trio "OPEN". 4. Rectifier diode "SHORTED" or "OPEN".			Repair alternator. Then... **GO TO B2**
B17 **AC RIPPLE TEST:** Connect voltmeter as shown: Note: If test meter is not equipped for AC ripple testing, use optional test below.	Key switch "ON". Engine at 1500 rpm. Observe voltmeter reading. 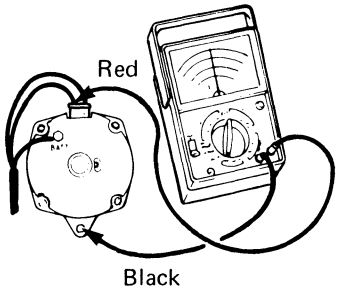	Spec. (Max.) 0.8 volt AC Note: If batteries are not fully charged AC ripple will exceed 0.8 volt. See Section 1-A3.	In Spec. **GO TO B18** Out of Spec. **GO TO B16**
ALTERNATOR AMPERAGE OUTPUT TEST: Connect ammeter (100 amp capacity) as shown: 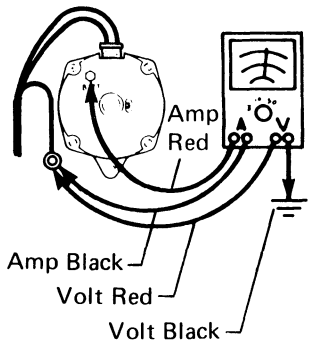	Connect carbon pile to batteries as shown: 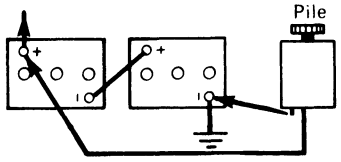 OR Hold fuel shut-off "OUT". Turn lights "ON". Crank engine for 20 seconds. 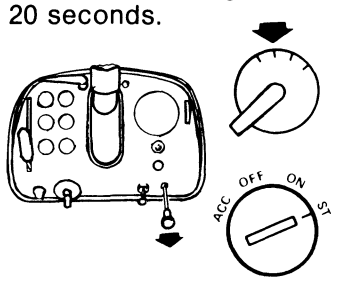 Turn all accessories except wipers "ON". Run engine at 2000 rpm. Observe meter reading.	Spec. (Min.) at 13.5 volts: 61 amp alternator: 50 amps 72 amp alternator 60 amps	In Spec. **GO TO B18** Out of Spec. **GO TO B16**

R32826

Step	Sequence		Result
B18 **ELECTRICAL SYSTEM LEAKAGE TEST:** Disconnect RH battery ground cable. 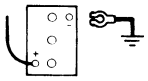 Turn all switches "OFF". Close SGB door. Note: Reconnect cable after testing or repair.	Connect test light with 100 ma current draw as shown: 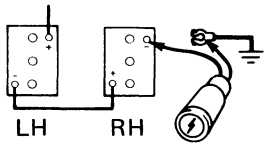 AT24693 Holder AT38185 24V Bulb	Spec. (Max.) 100 ma (0.1 amp): Light should be "OUT".	No Light: OK: **GO TO B20** Light: Not OK: **GO TO B19**
	OR		
	Connect voltage detector as shown: 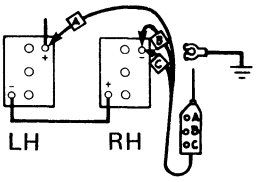	All lights should be "OUT".	

B19 Connect tester as in step B18. Follow circled numbers with arrow ○⟶ in sequence, disconnecting components one at a time until light goes "OUT". Reconnect each lead after check.

Repair circuit leak. Then... **GO TO B18**

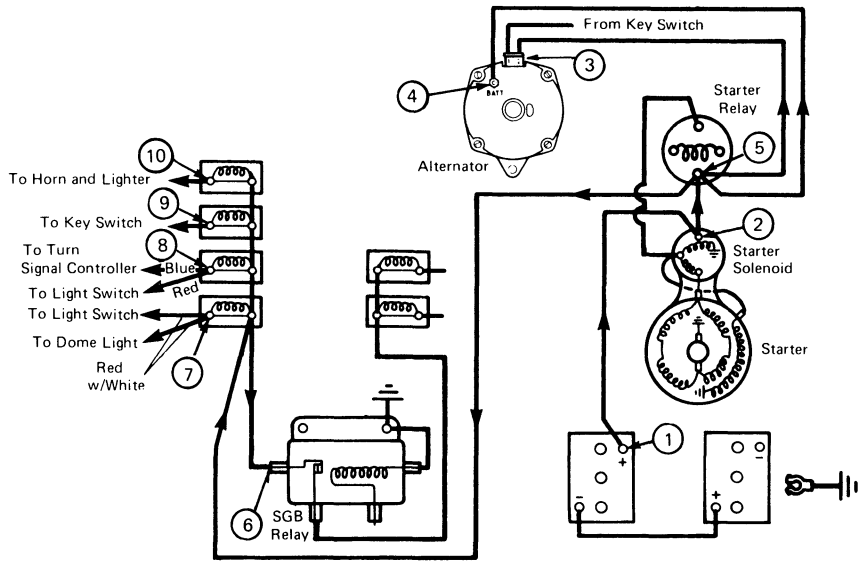

When the leak is interrupted, follow lead that was last disconnected to component it supplies and disconnect lead at that component. If the leak still exists, the problem is a "GROUNDED" or "SHORTED" circuit. If the leak does not exist, the problem is at the component.

R32827

4

Step	Sequence		Result
B20 **ALTERNATOR CAPACITY TEST:** Connect voltmeter to alternator as shown: 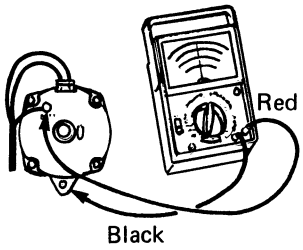	Engine at 2000 rpm. Turn "ON" all electrical components and lights to load alternator. Note: Remove windshield wiper arms to prevent scratching windshield. Observe voltmeter reading.	Spec. 13-15 volt	In Spec. **GO TO A1** Out of Spec. **GO TO B21**
B21 If additional electrical components have been installed, the alternator is overloaded.	Turn "OFF" electrical components that have been added. Repeat alternator capacity test as in B20.		In Spec. **GO TO B22** Out of Spec. **GO TO B1**
B22 Install a higher ampere rating stator or alternator.			Repeat test sequence. **GO TO B1**

4

R32828

JOHN DEERE ND ALTERNATOR

Step	Sequence		Result
C1 **UNDER- OR OVERCHARGED BATTERIES.** (Voltmeter needle below black band at 2000 rpm.) 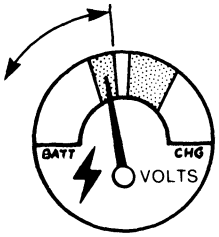 **OVERCHARGED BATTERIES.** Voltmeter needle above RH green band at 2000 rpm. 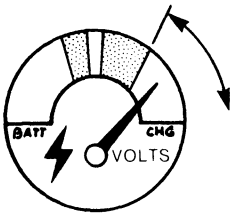	Check connections at alternator output and voltage regulator terminals. 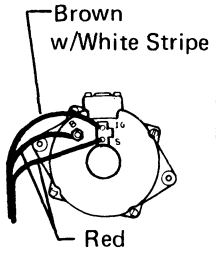	Check alternator pulley and belt tension. 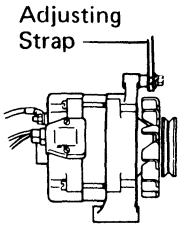	Correct abnormal conditions. Then... **GO TO C2**
C2 **ALTERNATOR—BATTERY CIRCUIT TEST:** Key switch "OFF". Engine "STOPPED". Battery voltage 12 volts (Min.) Connect voltmeter to alternator output terminal as shown.	Observe voltmeter reading. 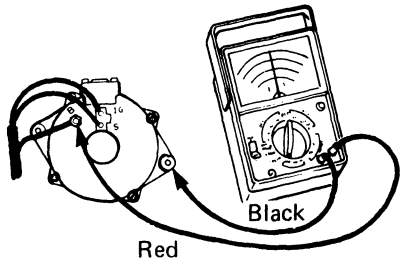	Spec. (Min.) 12 volts	OK: **GO TO C4** Not OK: **GO TO C3**
C3 There is high resistance or an "OPEN" circuit: There is an "OPEN" circuit: 1. between Ⓐ and Ⓑ 2. between Ⓑ and Ⓒ (or) 3. between Ⓒ and Ⓓ	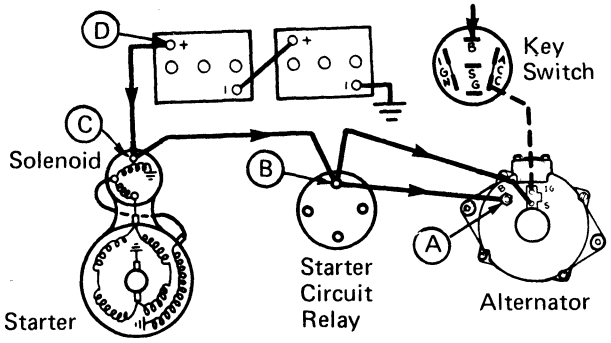		Repair circuit. Then... **GO TO C4**
C4 **VOLTAGE REGULATOR "S" TERMINAL CIRCUIT TEST:** Key switch "OFF" Engine "STOPPED". Connect voltmeter to voltage regulator coupler "S" terminal as shown:	Observe voltmeter reading. 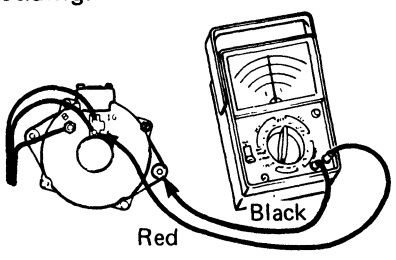	Spec. (Min.) 12 volts	OK: **GO TO C6** Not OK: **GO TO C5**

R32829

4

Step	*Sequence*	*Result*
C5 There is an "OPEN" circuit betwen "S" terminal Ⓐ and starter circuit relay terminal Ⓑ	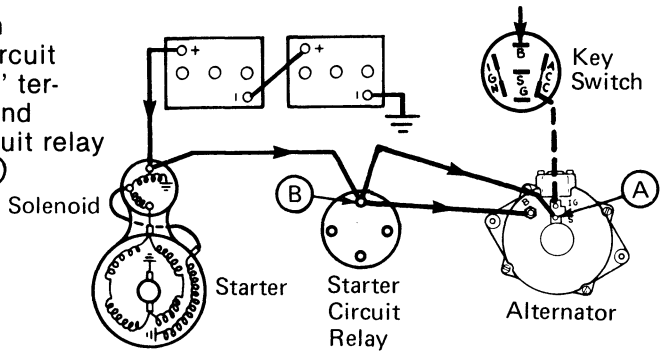	Repair circuit. Then... **GO TO C4**
C6 **VOLTAGE REGULATOR "IG" TERMINAL CIRCUIT TEST:** Key switch "ON". Engine "STOPPED".	Connect voltmeter to "IG" terminal as shown: 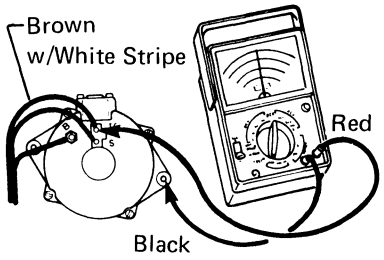	Spec. (Min.) 12 volts OK: **GO TO C8** Not OK: **GO TO C7**
C7 There is an "OPEN" circuit: 1. at key switch "ACC" terminal Ⓒ 2. at bulkhead connector Ⓑ 3. between Ⓐ and Ⓑ (or) 4. between Ⓑ and Ⓒ	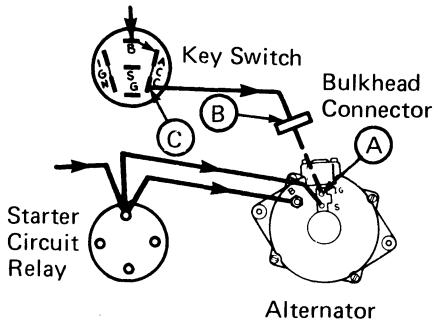	Repair circuit. Then... **GO TO C6**
C8 **ALTERNATOR OUTPUT VOLTAGE TEST:** Connect voltmeter to "B" terminal as shown:	Key switch "ON". Engine at 1500 rpm. Observe voltmeter reading. 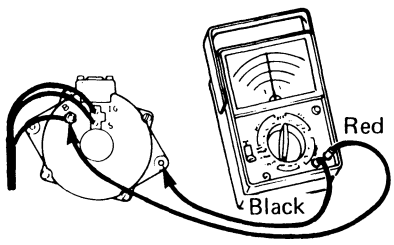	Spec. 13-15 volts In Spec. **GO TO C14** Below Spec. **GO TO C10** Above Spec. **GO TO C9**
C9 The following are causes of high voltage: 1. "GROUNDED" between brushes and voltage regulator. 2. Internally "GROUNDED" voltage regulator. (or) 3. "GROUNDED" rotor field circuit.		Repair alternator. Then... **GO TO C1**

R32830

4

Step	Sequence		Result
C10 Remove cover from voltage regulator. Reinstall one screw in voltage regulator. Connect voltmeter as shown. Key switch "ON". Engine at 1500 rpm.	Ground LH regulator terminal "F". Observe voltmeter reading. CAUTION: DO NOT GROUND "G" terminal or alternator will be damaged. 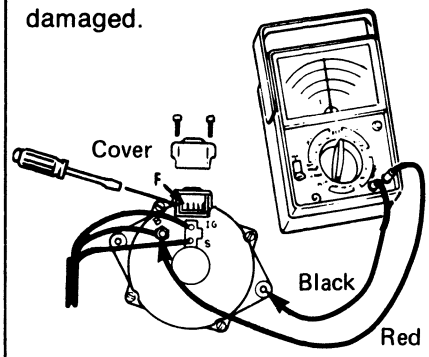	Spec. (Min.) 15 volts Note: Do not allow voltage to go above 16.5 volts.	Above 15 volts: Replace voltage regulator. Then... **GO TO C8** Below 15 volts: Continue testing... **GO TO C11**
C11 **FIELD CURRENT DRAW TEST:** Connect ammeter as shown: Key switch "OFF". Engine "STOPPED".	Observe ammeter reading. 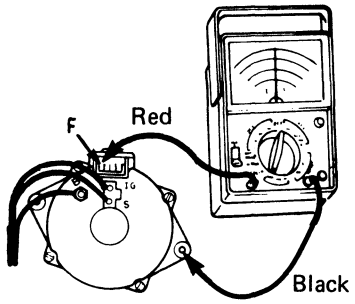	Spec. 3.2-3.8 amps	In Spec. **GO TO C13** Below Spec. **GO TO C12** Above Spec: Replace rotor. Then... **GO TO C1**
C12 If field current draw was below spec., one or more of the following causes exists: 1. Rotor slip rings dirty. 2. brushes worn or broken (or) 3. rotor field winding "OPEN".			Repair alternator. Then... **GO TO C1**
C13 One or more of the following causes exists: 1. loose diode plate 2. rectifier diode "SHORTED" or "OPEN" 3. resistor open. 4. diode duo "SHORTED" or "OPEN". 5. stator "SHORTED" or "GROUNDED".			Repair alternator. Then... **GO TO C1**

4

R32831

Step	*Sequence*		*Result*
C14 AC RIPPLE TEST: Connect voltmeter as shown: Note: If test meter is not equipped for AC ripple testing, use optional test below. CAUTION: DO NOT GROUND "G" terminal or alternator will be damaged.	Key switch "ON". Engine at 1500 rpm. Observe voltmeter reading. 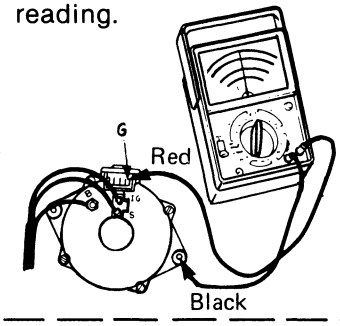	Spec. (Max.) 1.0 V AC Note: If batteries are not fully charged, AC ripple will exceed 1.0v. See Section 1-A3, Page 1-1.	In Spec. **GO TO C15** Out of Spec. **GO TO C13**
ALTERNATOR AMPERAGE OUTPUT TEST: (Optional) Connect ammeter of 100 amp (Min.) capacity as shown: 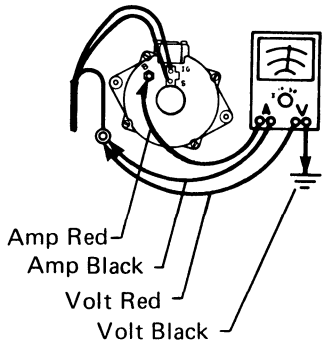	Connect carbon pile to batteries as shown: 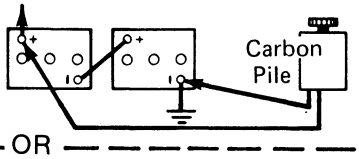 OR Hold fuel shut-off "OUT". Turn lights "ON". Crank engine for 20 seconds. 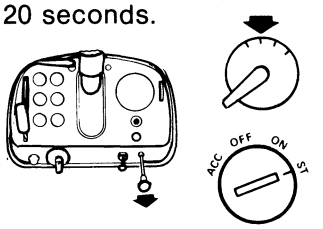 Turn all accessories "ON" except wipers. Run engine at 2000 rpm. Observe meter reading.	Spec. (Min.) 75 amp alternator: 65 amps 90 amp alternator: 80 amps.	In Spec. **GO TO C15** Out of Spec. **GO TO C13**
C15 ELECTRICAL SYSTEM LEAKAGE TEST: Disconnect RH battery ground cable. 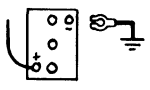 Turn all switches "OFF". SGB door "CLOSED". Note: Reconnect cable after testing or repair.	Connect test light with 100 MA current draw as shown: 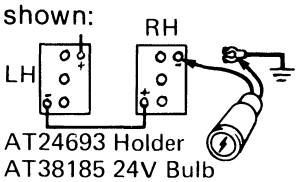 OR Connect voltage detector as shown: 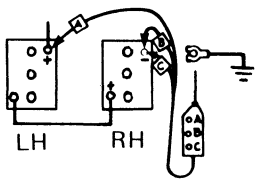	Spec. (Max.) 100 MA (0.1 amp): Light "OUT" All lights "OUT".	No Light: OK: **GO TO C17** Light: Not OK: **GO TO C16**

R32832

Step	Sequence		Result
C16 Connect tester as in Step C15. Follow circled numbers with arrow ○→ in sequence, disconnecting components one at a time until light goes "OUT". Reconnect each lead after check. 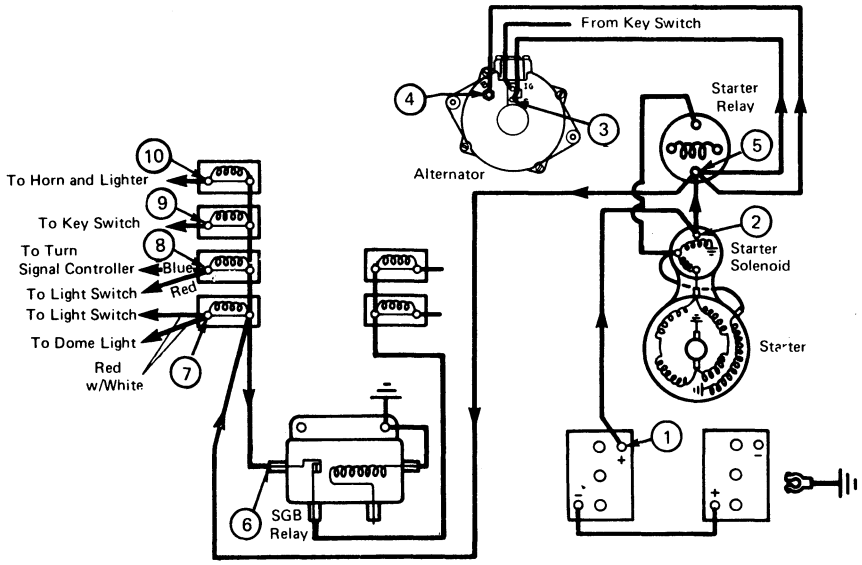 When the leak is interrupted, follow lead that was last disconnectd to component it supplies and disconnect lead at that component. If the leak still exists, the problem is a "GROUNDED" or "SHORTED" circuit. If the leak does not exist, the problem is at the component.			Repair circuit leak. Then... **GO TO C15**
C17 **ALTERNATOR CAPACITY TEST:** Connect voltmeter to alternator as shown: 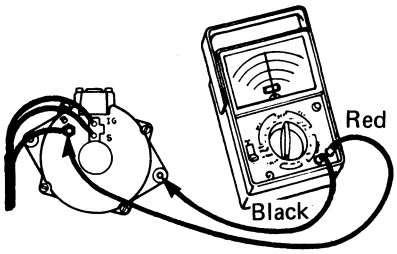	Engine at 2000 rpm. Turn all electrical components and lights "ON" to load alternator. Note: Remove windshield wiper arms to prevent scratching windshield. Observe voltmeter reading.	Spec. 13-15 volts	In Spec. **GO TO A1** Out of Spec. **GO TO C18**
C18 If additional electrical components have been installed, the alternator is "OVERLOADED".	Turn "OFF" electrical components that have been added. Repeat alternator capacity test as in C17.		In Spec. **GO TO C19** Out of Spec. **GO TO C1**
C19 Install a higher ampere rating stator or alternator.			Repeat test sequence: **GO TO C1**

R32833

INSTRUMENT CLUSTER GAUGE AND INDICATOR CIRCUITS

Step	Sequence	Result
A1 **OPERATIONAL CHECK OF GAUGES AND INDICATORS.** Key switch "ON". Engine "STOPPED". Observe voltmeter NEEDLE position.	Normal 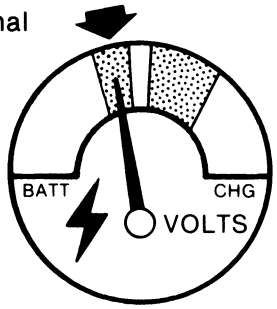	In LH green band: Satisfactory. **GO TO A2** Above LH green band: **GO TO B1** Below LH green band: **GO TO B3**
A2 Key switch "ON". Engine "STOPPED". Observe needle position of: 1. Fuel gauge 2. Engine temperature gauge 3. Engine oil pressure gauge 4. Clutch lube gauge	Normal 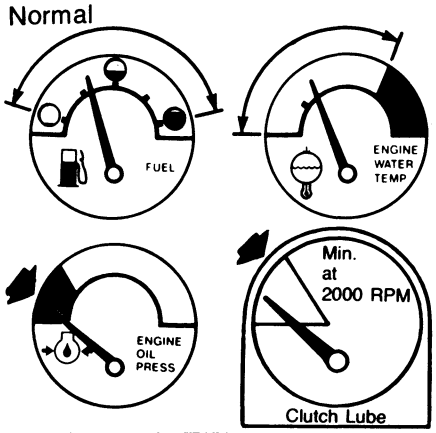	OK: **GO TO A3** Fuel, temp. or oil gauge Not OK: **GO TO C1** Clutch lube gauge Not OK: **GO TO F1**
A3 Key switch "ON". All other switches "OFF". Engine at 1500 rpm. Observe voltmeter NEEDLE position.	Normal 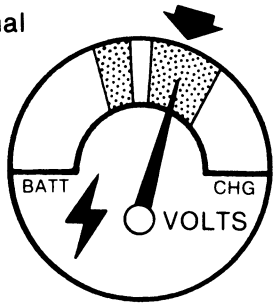	In RH green band: OK: **GO TO A4** Above or below RH green band: Not OK: **GO TO SECTION 4**
A4 Key switch "ON". Engine at 1500 rpm. Observe needle position of: 1. Fuel gauge 2. Engine temperature 3. Engine oil pressure 4. Clutch lube gauge	Normal 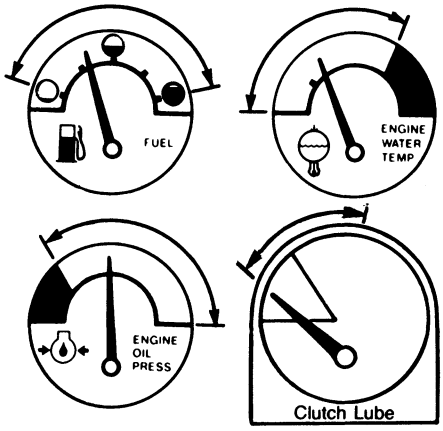	OK: **GO TO A5** Fuel, temp. or oil gauge Not OK: **GO TO C1** Clutch lube gauge Not OK: **GO TO F1**

5

R32834

Step	Sequence	Result
(A5) INDICATOR BULB CHECK Clutch pedal depressed. Transmission "IN GEAR". Note: No transmission lube indicator: **GO TO A6**	Hold fuel shut-off "OUT". Hold key switch at "START". 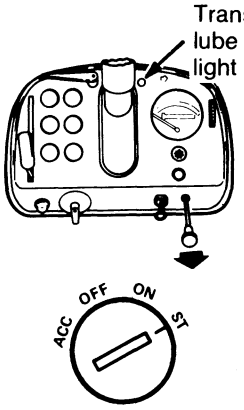 Both cluster indicator and transmission lube lamps should glow. 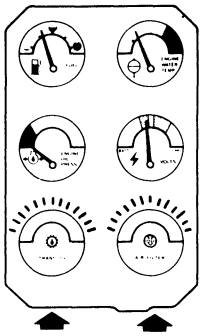	All lamps glow: OK **GO TO A6** Either cluster lamp "OUT": **GO TO D1** Transmission lube lamp "OUT": **GO TO G1**
(A6) Key switch "ON". Engine "STOPPED". 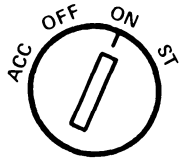	Observe air cleaner indicator lamp for operation. 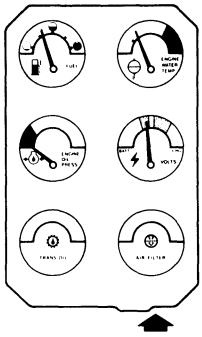	Lamp "OUT". OK: **GO TO A7** Lamp "ON". Not OK: **GO TO D4**
(A7) AIR CLEANER INDICATOR CIRCUIT CHECK: Remove air stack cap. Engine "Running". Cover air stack opening with cardboard. 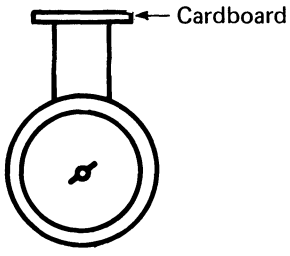	Key switch "ON". Air cleaner indicator should be "ON". 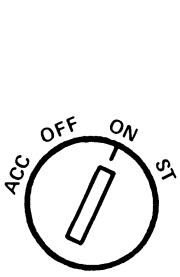 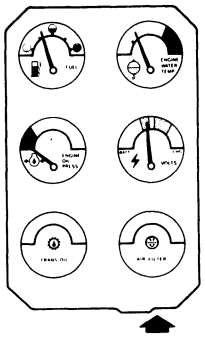 Remove cardboard. Reinstall cap after testing or repair.	A. Lamp Comes "ON". (Operator Complaint) 1. None **GO TO A8** 2. Lamp never comes "ON". **GO TO D12** 3. Cleans element frequently. **GO TO D11** B. Lamp "OFF". **GO TO D8**

R32835

5

Step	*Sequence*	*Result*
(A8) TRANSMISSION OIL INDICATOR CIRCUIT CHECK Observe transmission oil indicator as follows: Key switch "ON". Engine "STOPPED" ----------"ON" Engine "RUNNING" ----------"OUT" 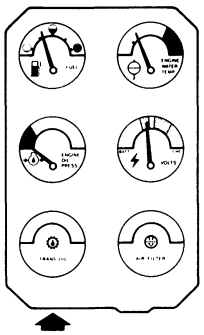 NOTE: If a problem with transmission oil indicator circuit (tractors without a trans. lube indicator) **GO TO H1.**		A. Lamp operation OK: **GO TO A9** B. Lamp does not go "OUT". **GO TO E3** C. Lamp does not come "ON". **GO TO E1**
(A9) TRANSMISSION LUBE CIRCUIT CHECK: Ground transmission lube switch lead with a jumper wire. 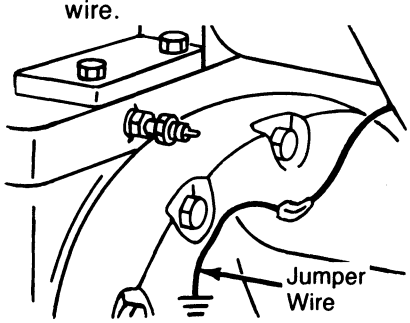 Reconnect lead after testing or repair.	Transmission in "PARK". Engine "RUNNING". Key switch "ON". Clutch pedal "UP". Transmission lube lamp should be "ON". 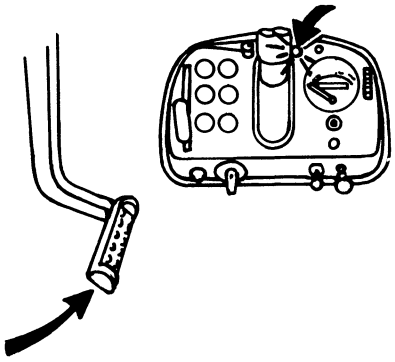	Lamp "ON". **GO TO A10** Lamp "OFF". **GO TO G6**
(A10) CLUTCH OVER-RIDE SWITCH CHECK: Transmission lube switch lead grounded as in A9. Engine "RUNNING". Key switch "ON".	Depress clutch pedal. Transmission lube lamp should go "OUT". 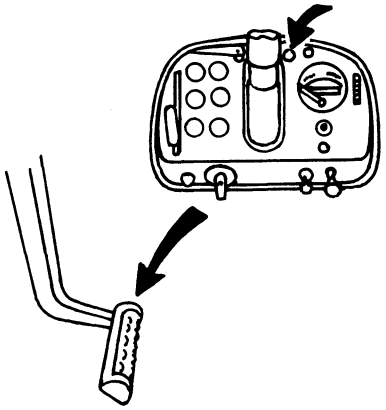	Lamp "OUT". **GO TO A11** Lamp "ON". Replace over-ride switch. Then... **GO TO A9**

5

R32836

Step	*Sequence*	*Result*
A11 **TRANSMISSION LUBE PRESSURE CHECK:** Bypass clutch over-ride switch as shown. 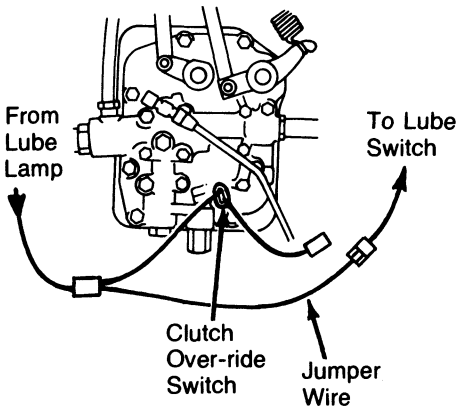	Key switch "ON". Observe lube lamp operation as follows. 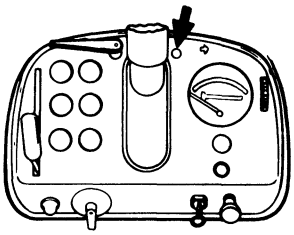 Engine "STOPPED", lamp "ON". Engine "RUNNING", lamp "OFF". Note: Reconnect switches after testing or repair.	Operation OK: **GO TO SECTION 2** Operation Not OK: **GO TO A12**
A12 Install a 60 psi gauge in place of transmission lube pressure switch. 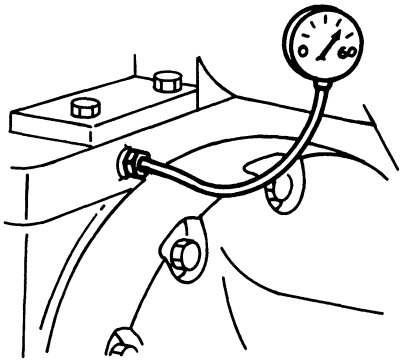	Operate engine at 1000 RPM. Clutch pedal "UP". Spec. (Min.) 10 psi with 150° oil	In spec. Replace switch. Then... **GO TO A9** Out of spec. Repair transmission pump. Then... **GO TO A9**

R32837

5

Step	*Sequence*	*Result*
B1 **PROBLEM: VOLTMETER INDICATES HIGH VOLTAGE.** Turn light switch to "H" for 30 seconds to remove battery surface charge. Dimmer switch at "HIGH" beam. 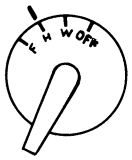	Light switch "OFF". Key switch "ON". Engine "STOPPED". Observe voltmeter NEEDLE position. 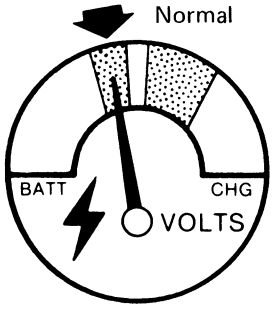	In LH green band: OK: **GO TO B2** Above LH green band: Replace voltmeter: **GO TO A1**
B2 Connect test meter to alternator output terminal as shown: 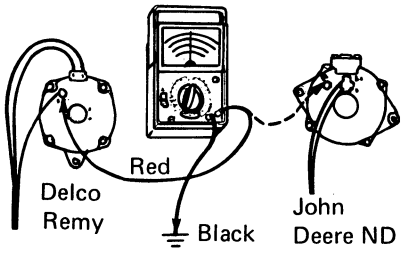	Key switch "ON". Engine at 1500 rpm. Observe test meter (voltage) reading. 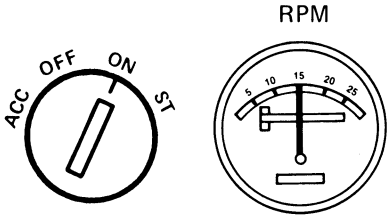	13-15 volts: OK: **GO TO SECTION 2** Below 13 or above 15 volts: **GO TO SECTION 4**
B3 **PROBLEM: VOLTMETER INDICATES LOW VOLTAGE.** Remove LH and rear steering support cowling. 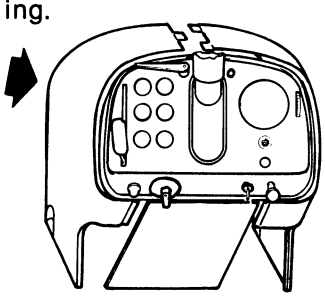	Key switch "ON". Check voltmeter ground terminal (–) for voltage. 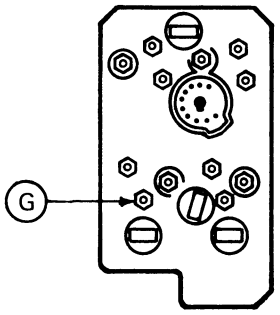	No voltage: OK **GO TO B5** Voltage: Not OK **GO TO B4**
B4 There is an "OPEN" in the printed ground circuit of the circuit board. 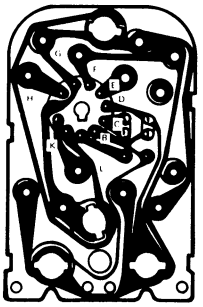 Printed Circuit		Replace circuit board. Then... **GO TO A1**

R32838

Step	Sequence	Result
B5 Key switch "ON". Engine "STOPPED". Check voltmeter shielded (+) terminal for battery voltage.	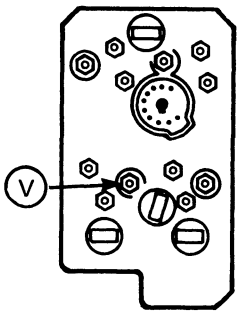	Battery voltage: Replace voltmeter. **GO TO A1** Low or no voltage: **GO TO B6**
B6 There is "HIGH RESISTANCE" or an "OPEN" circuit: 1. at key switch 2. between (A) and (B) 3. between (B) and "F" terminal (or) 4. in printed circuit of circuit board.	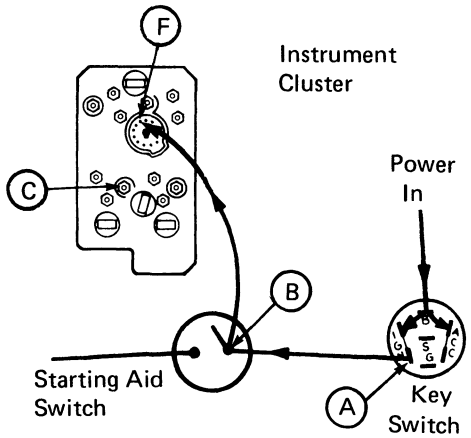	Repair circuit. Then... **GO TO A1**
C1 **PROBLEM: FUEL, ENGINE TEMPERATURE OR ENGINE OIL PRESSURE GAUGE(S) DOES NOT OPERATE PROPERLY:** Key switch "ON". Engine "STOPPED".	Disconnect gauge sender lead at sender(s) making an "OPEN" circuit. Gauge needle(s) should position as shown. 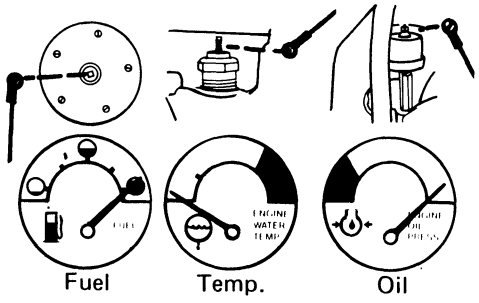	Needle(s) positioned: **GO TO C2** Needle(s) did not position: **GO TO C3**
C2 Attach sender lead(s) to frame making a "grounded" circuit. Key switch "ON". Engine "STOPPED".	See if gauge needle(s) positioned to opposite side of gauge as shown: 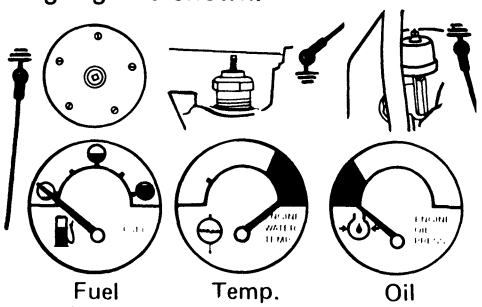	Needle(s) positioned correctly: **GO TO C12** Needle(s) did not position correctly: **GO TO C3**

R32839

5

Step	Sequence	Result
C3 Remove LH steering support cowling. 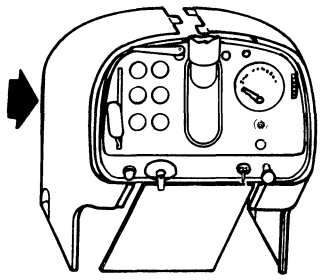	Disconnect coupler from instrument cluster. "GROUND" sender lead(s) to frame (near sender). Check terminal wires in cluster coupler for continuity to ground. 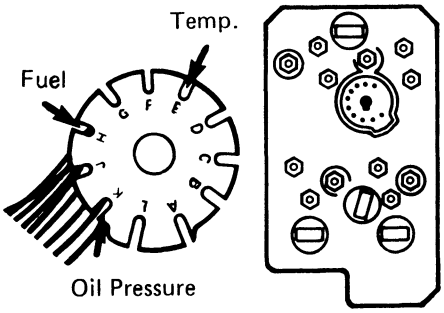	Continuity to ground: **GO TO C5** No continuity to ground: **GO TO C4**
C4 Sender wire(s) is "OPEN": 1. between sender and bulkhead connector (or) 2. between bulkhead connector and cluster coupler Note: Reconnect coupler after testing or repair.	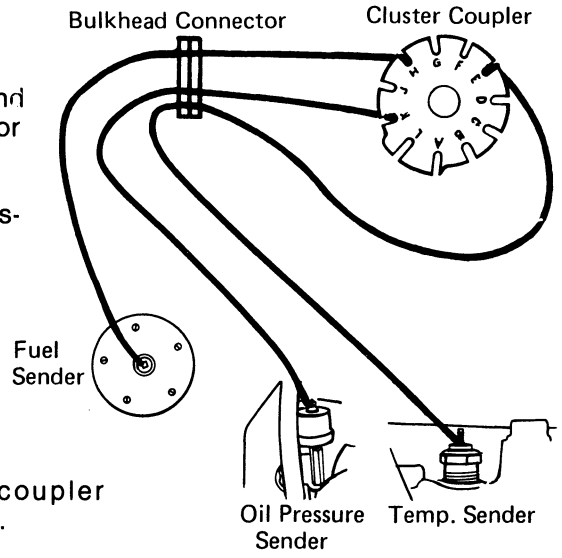	Repair circuit. Then... **GO TO A1**
C5 Disconnect sender lead from frame or sender making an "OPEN" circuit. Note: Reconnect coupler after testing or repair.	Check terminal wires in cluster coupler for continuity to ground. 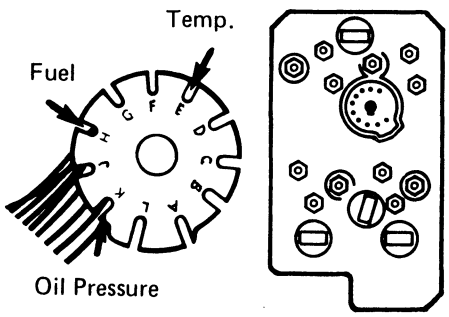	No continuity to ground: OK. **GO TO C7** Continuity to ground: Not OK. **GO TO C6**

5

R32840

Step	*Sequence*	*Result*
C6 Sender wire(s) is "GROUNDED": 1. between sender and bulkhead connector (or) 2. between bulkhead connector and cluster coupler.	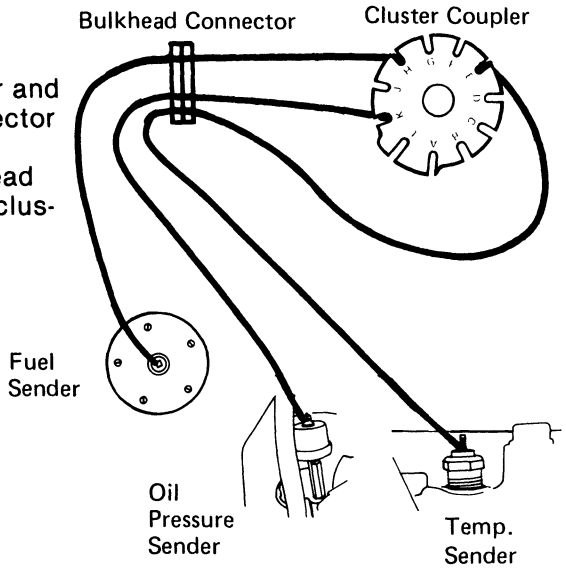	Repair circuit. Then... **GO TO A1**
C7 Remove rear steering support cowling. 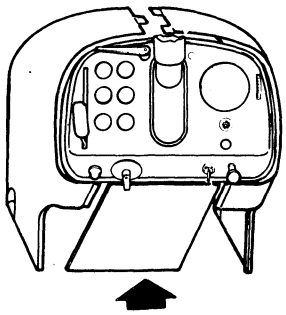	Key switch "ON". Check all four shielded (+) terminals of gauges for battery voltage. 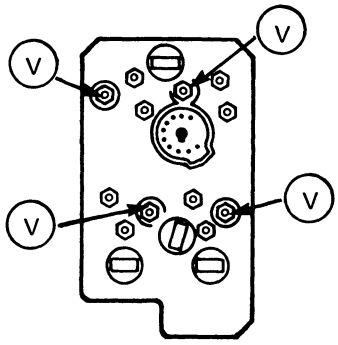	Battery voltage: OK. **GO TO C9** Low or no voltage or continuity to ground: Not OK. **GO TO C8**
C8 There is "HIGH RESISTANCE" or an "OPEN" circuit in the power (+) circuit of the instrument cluster caused by: 1. loose gauge nuts 2. Missing spring washers (or) 3. damaged printed circuit.	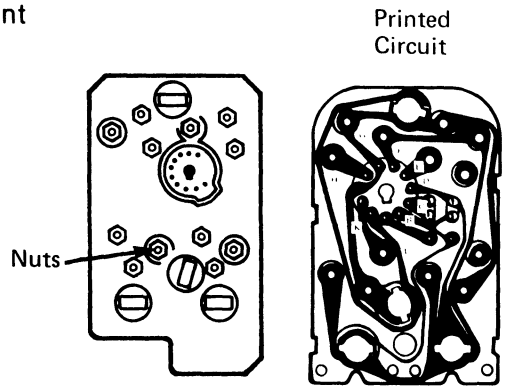	Repair circuit. Then... **GO TO A1**

R32841

Step	Sequence	Result
C9 Disconnect fuel, temperature and oil pressure sender leads from senders. Key switch "ON".	Check all four gauge ground (–) terminals for voltage. 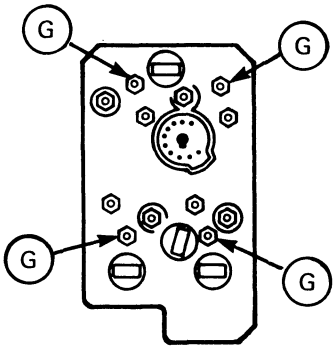	No voltage: OK. **GO TO C11** Voltage: Not OK. **GO TO C10**
C10 There is "HIGH RESISTANCE" or an "OPEN" circuit in the ground (–) circuit of the instrument cluster caused by: 1. loose gauge nuts 2. missing spring washers (or) 3. damaged printed circuit.	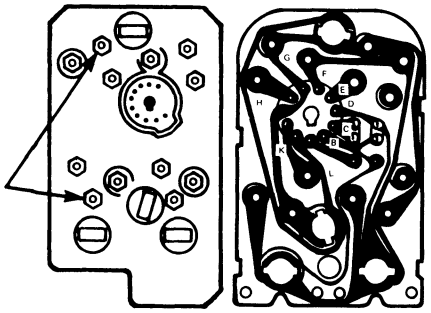	Repair circuit. Then... **GO TO A1**
C11 Remove gauge(s) from cluster. 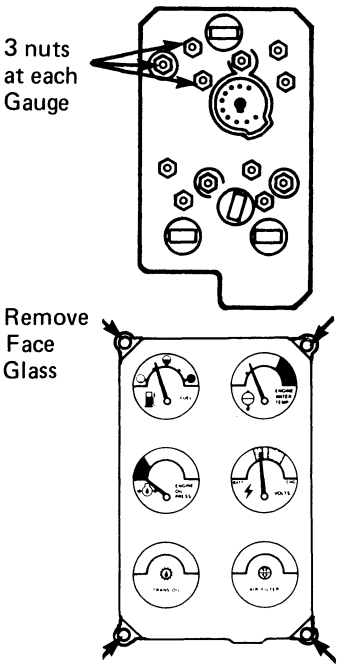	Check gauge(s) for loose TERMINAL nuts. 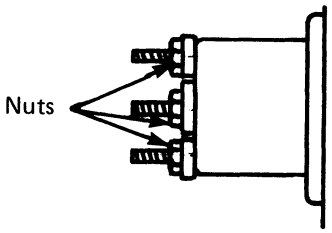	Nuts tight. Replace gauge. Then... **GO TO A1** Nuts loose. Tighten and reinstall gauge. Then... **GO TO A1**

R32842

5

C12

Disconnect sender lead(s). Check senders(s) for ohms resistance with an ohmmeter.

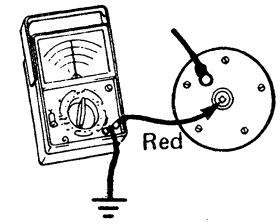

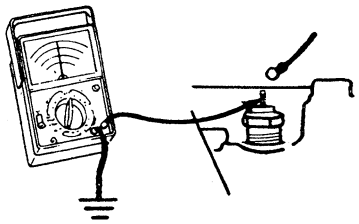

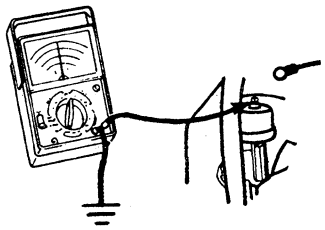

GAUGE	NEEDLE POSITION	SPEC: (ohms)
Fuel	1—Empty	0—3
	2—1/2 Full	42—48
	3—Full	87—93
Water Temp.	1—38°C -(100°F)	300—390
	2—71°C (160°F)	130—150
	3—93°C (200°F)	78—90
	4—98°C (210°F)	70—80
	5—110°C (230°F)	55—65
	6—116°C (240°F)	50—55
Engine Oil Press.	1—0 psi (0 bar) (engine off)	0—10
	2—10 psi (0.7 bar)	16—20
	3—30 psi (2.0 bar) (est. 1500 rpm)	48—64
	4—60 psi (4.0 bar) (est. 2000 rpm)	78—92

In Spec.

GO TO C13

Out of Spec.
Replace sender.
Then . . .

REPEAT C12

NOTE: Specified ohms for oil sender are for on tractor testing. Bench testing will result in 6—10 ohms less without machine vibration. Pressurize sender to 60 psi and check calibration after descending pressure to each check point.

AH7;RW6687 40U;240010 IEX3 291086

C13

Connect green lead of JTO1633 to sender lead and ground black lead as shown. Adjust knobs of JTO1633 to get gauge needles at specified check points. Then disconnect sender lead to check ohms across JTO1633 with an ohmmeter. Compare ohms to specs. in step C12.

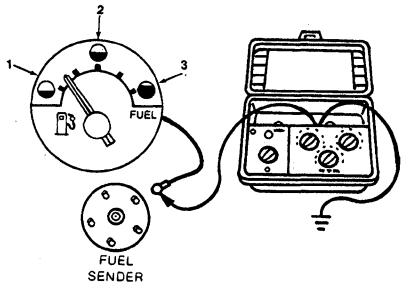

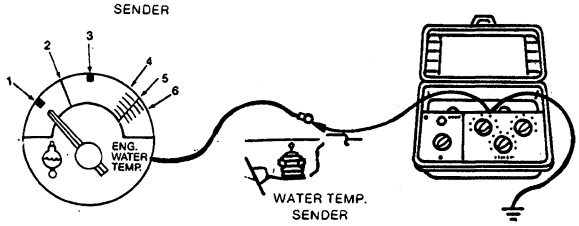

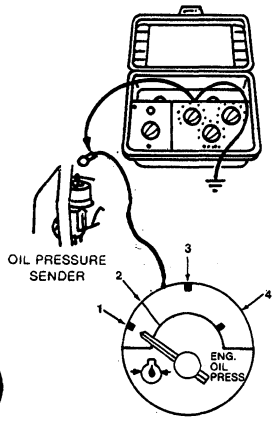

OK:

GO TO SECTION 2

Not OK:
Replace gauge.
Then . . .

GO TO A1

NOTE: Reconnect sender lead(s) after testing or repair.

AH7;RW1206 9 40U;240010 IF1X3 041186

Step	Sequence		Result
(D1) PROBLEM: INDICATOR LAMP(S) INOPERATIVE Remove rear steering support cowling. 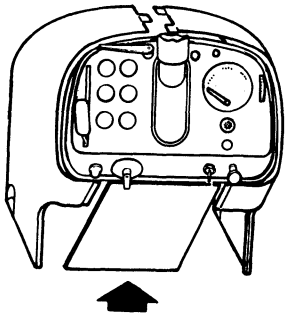	Replace lower indicator bulb(s) in red socket(s). 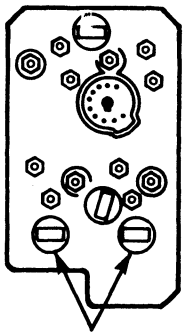 Indicator Bulbs	Depress clutch pedal. Hold key switch at "START". 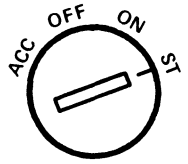 Both indicator lamps should glow. 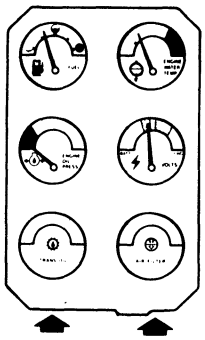	Both lamps glow: OK. **GO TO A6** Either lamp out: Not OK. **GO TO D2**
(D2) Remove LH steering support cowling. 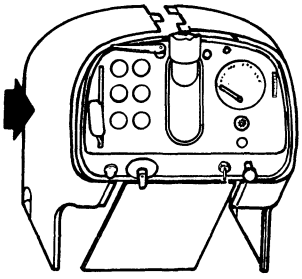	Transmission in "1st GEAR". Key switch at "START". 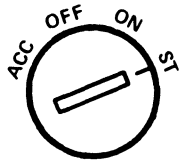 NOTE: This is a ground circuit check.	Check "C" terminal wire (white) of cluster coupler for voltage with coupler connected. 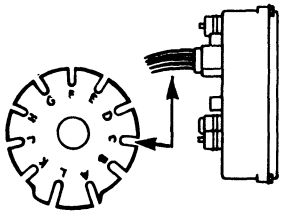	No voltage: Replace "OPEN" circuit board. **GO TO A5** Voltage: Not OK. **GO TO D3**
(D3) There is "HIGH RESISTANCE" or an "OPEN" circuit: 1. Between "C" terminal of cluster coupler and "G" terminal of key switch. 2. At key switch (or) 3. Key switch not "GROUNDED". 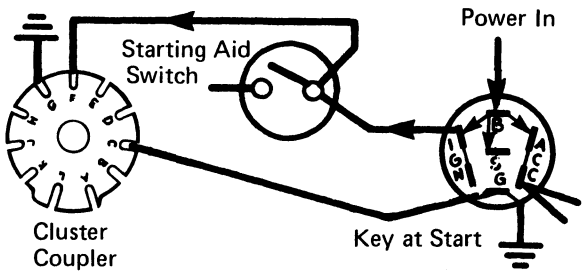 R32844			Repair circuit. Then... **GO TO A5**

5

Step	Sequence	Result
(D4) **PROBLEM: AIR CLEANER LAMP "ON".** Remove coupler from vacuum switch. 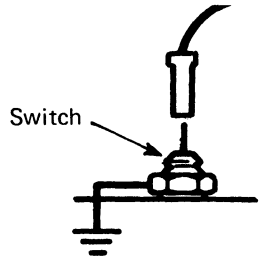	Key switch "ON". Engine "STOPPED". Observe indicator lamp. 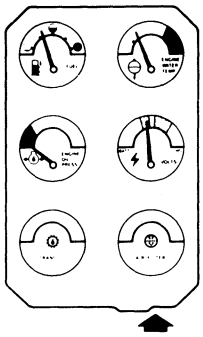	Lamp out: Replace switch. Then... **GO TO A6** Lamp on: Not OK. **GO TO D5**
(D5) Remove LH steering support cowling. 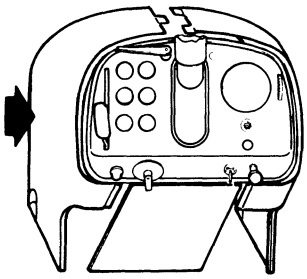	Disconnect instrument cluster coupler. Remove air cleaner "D" wire from coupler as shown: 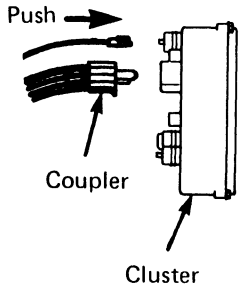	Reconnect coupler. 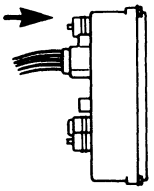 Key switch "ON". Engine "STOPPED". Observe indicator lamp. 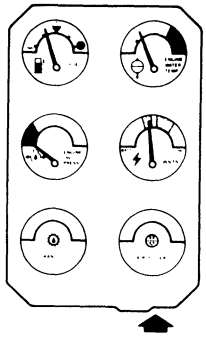 Lamp out: **GO TO D7** Lamp ON: **GO TO D6**
(D6) The following are causes of warning lamp(s) staying "ON": 1. Wires not correctly matched in cluster coupler. 2. Wire between "C" terminal of coupler and "G" terminal of key switch "GROUNDED" 3. Cluster printed circuit "GROUNDED" (or) 4. Cluster circuit board diode "SHORTED".	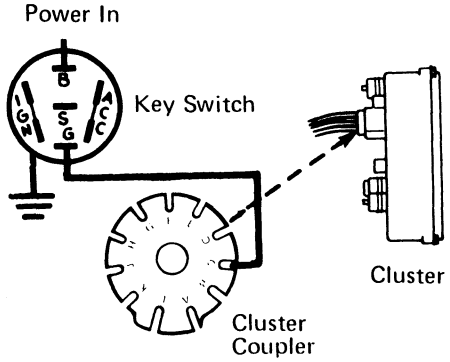	Repair circuit. Then... **GO TO A1**

R32845

5

Step	*Sequence*	*Result*
D7 Switch wire is "GROUNDED". 1. Between vacuum switch and bulkhead connector (or) 2. between bulkhead connector and cluster coupler.	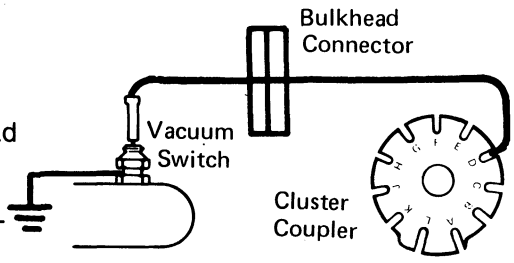	Repair circuit. Then... **GO TO A1**
D8 Connect a jumper wire to vacuum switch as shown: 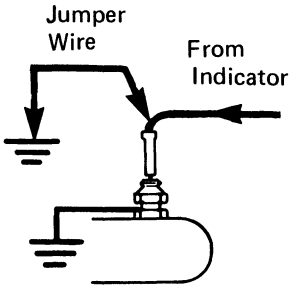	Key switch "ON". Engine "STOPPED". Observe air cleaner indicator lamp. 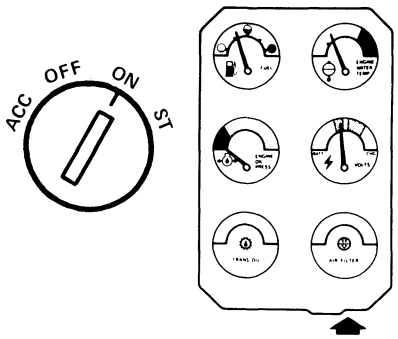 Note: Remove jumper wire after testing or repair.	Lamp ON: **GO TO D9** Lamp OFF: **GO TO D10**
D9 Check air cleaner switch ground wire for continuity to ground.	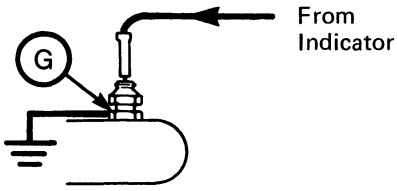	Good continuity: Replace switch. Then... **GO TO A7** No continuity: Repair ground. Then... **GO TO A7**
D10 Switch circuit has "HIGH RESISTANCE" or an "OPEN": 1. Between vacuum switch and bulkhead connector. 2. Between bulkhead connector and cluster coupler (or) 3. In cluster circuit board.	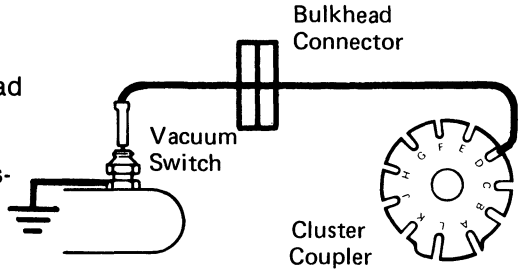	Repair circuit. Then... **GO TO A1**
D11 Check the following for restriction of air flow into intake manifold: 1. air cleaner elements. 2. air cleaner housing. 3. air stack or inlet pipe into air cleaner housing.		OK: **GO TO D12** Not OK: Repair. Then... **GO TO SECTION 2**

R32846

5

Step	Sequence		Result
D12 Remove vacuum switch. Install switch in a ¼" NPT TEE with a water vacuum gauge as shown: 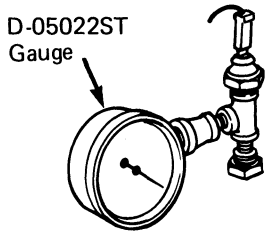 	Connect ohmmeter as shown: 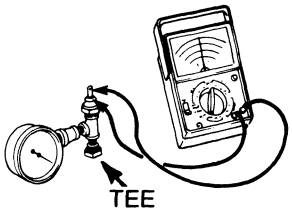 Suck on TEE opening. Observe gauge reading when continuity through vacuum switch contacts.	Spec. 24-26 (60-65 m bar) water Note: Reconnect coupler after testing or repair.	In Spec.: Reinstall switch. **GO TO SECTION 2** Out of Spec. Replace switch. Then... **GO TO A7**
E1 **PROBLEM: Transmission Oil Indicator Does Not Come "ON".** Connect a jumper wire as shown: 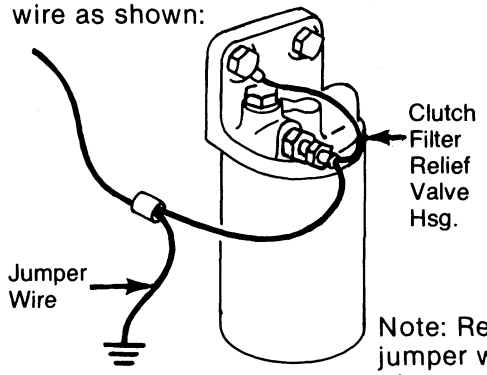 Note: Remove jumper wire after testing or repair.		Key switch "ON" Engine "STOPPED". Observe indicator for operation. 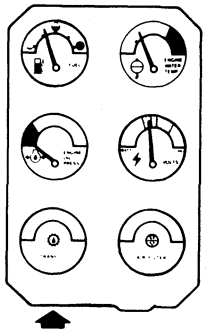	Lamp ON: Replace pressure switch. Then... **GO TO A8** Lamp OFF: **GO TO E2**
E2 Switch circuit has "HIGH RESISTANCE" or an "OPEN" circuit: 1. Between switch coupler and bulkhead connector. 2. Between bulkhead connector and cluster coupler (or) 3. on cluster circuit board. 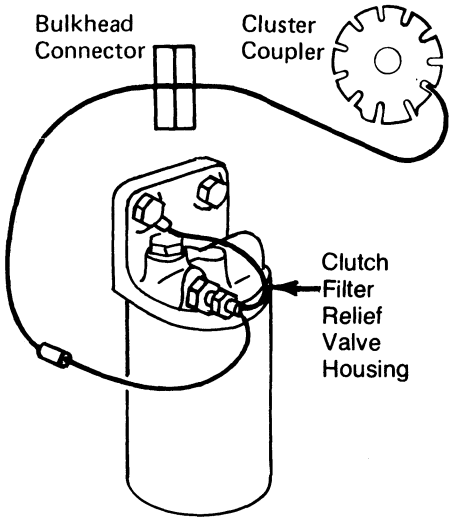 			Repair circuit. Then... **GO TO A8**

R32847

5

Step	*Sequence*	*Result*
(E3) **PROBLEM:** Transmission oil indicator does not go "OUT". Disconnect clutch oil pressure switch coupler. 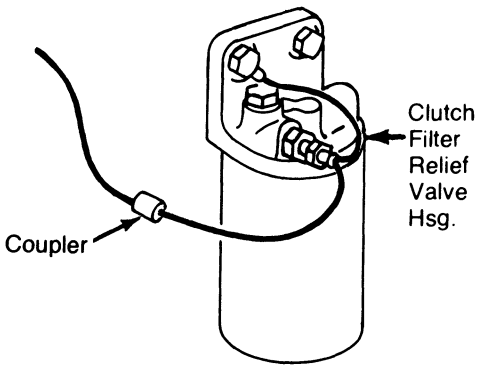 	Key switch "ON". Observe indicator for operation. 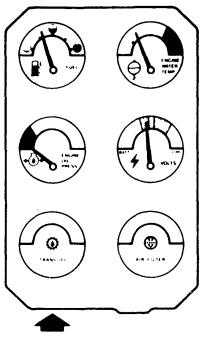	Lamp "OUT". **GO TO E5** Lamp "ON". **GO TO E4**
(E4) Switch circuit is "GROUNDED". 1. Between switch and bulkhead connector. 2. Between bulkhead and cluster coupler (or) 3. On cluster circuit board. 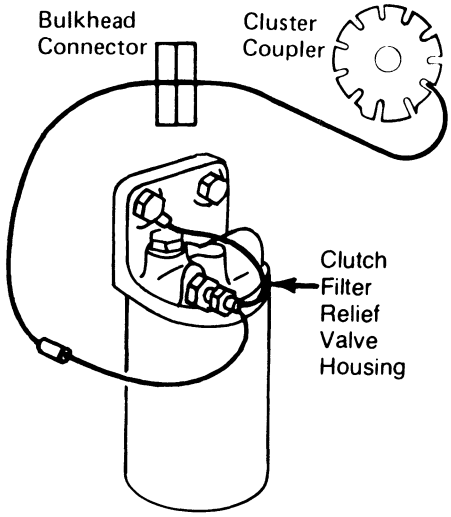 		Repair circuit. Then... **GO TO A1**

5

R32848

Step	Sequence		Result
E5 **CLUTCH PRESSURE SWITCH TEST:** Install 300 psi gauge as shown: 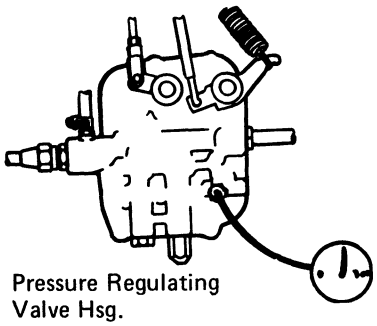 Pressure Regulating Valve Hsg.	Engine at 2000 rpm. 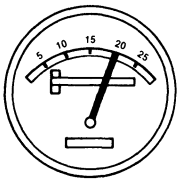 Observe clutch pressure/ charge pump pressure.	Spec. (psi) 170-180 (11.7-12.4 bar)	In spec.: Replace pressure switch. Then... **GO TO A8** Out of spec.? **GO TO HYD. DIAG. 70-6-15**
F1 **PROBLEM:** Clutch lube gauge does not operate properly: Key switch "ON". Engine "STOPPED".	Disconnect clutch lube gauge sender lead at sender, making an "OPEN" circuit. Gauge needle should position to full RH side. 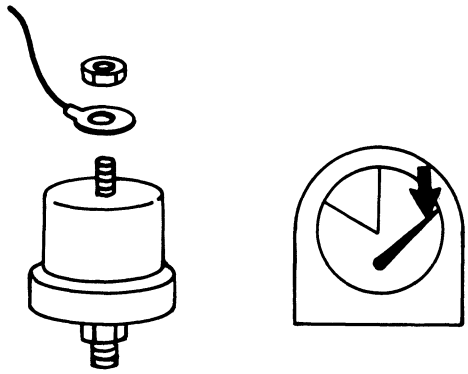		Needle positioned: **GO TO F2** Needle did not position: **GO TO F3**
F2 Attach sender lead to frame making a "grounded" circuit. Key switch "ON". Engine "STOPPED".	See if gauge needle positioned to opposite side of gauge as shown: 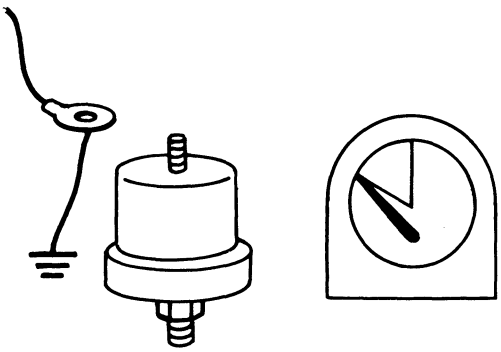		Needle positioned: **GO TO F7** Needle did not position: **GO TO F3**

R32849

5

Step	*Sequence*	*Result*
F3 Key switch "ON". Check clutch lube gauge (+) terminal for battery voltage.	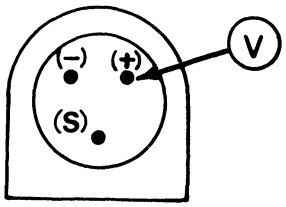	Battery voltage **GO TO F5** LOW or NO voltage. **GO TO F4**
F4 There is "high resistance" or an "open" circuit between lower R.H. circuit breaker (A) and clutch lube gauge (B).	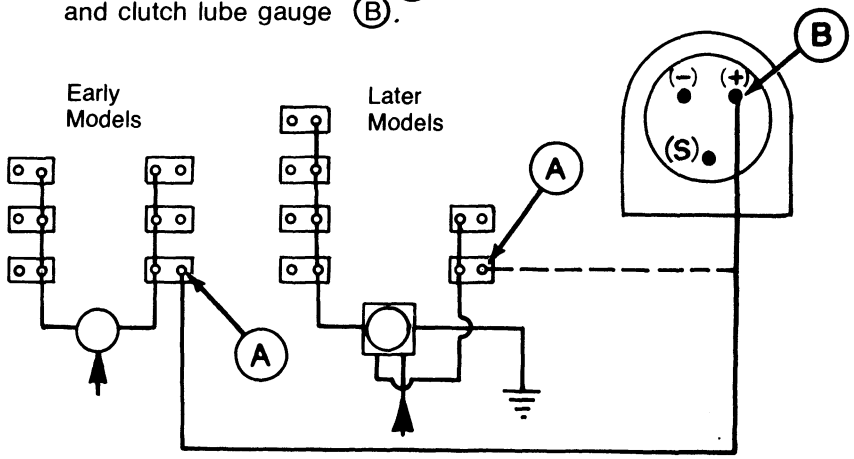	Repair circuit. Then... **GO TO A1**
F5 Key switch "ON". Check clutch lube gauge (−) terminal for continuity to ground.	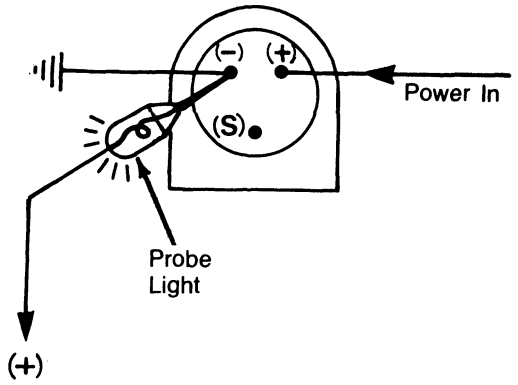	Continuity to ground: **GO TO F6** No continuity to ground. Repair circuit, Then... **GO TO A1**
F6 Clutch lube gauge sender lead has "high resistance, is "open" or is "grounded" between clutch lube gauge (A) and gauge sender (B).	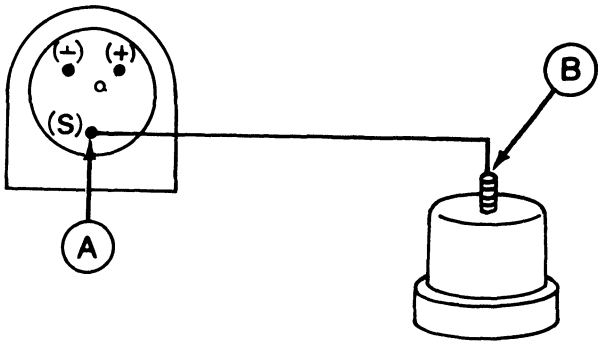	Repair circuit. Then... **GO TO A1**

R32850

5

Step	Sequence	Result
F7 Install a 60 psi lube gauge at test port. Install one end of a jumper hose in SCV. Tie other end in trans. filler tube. 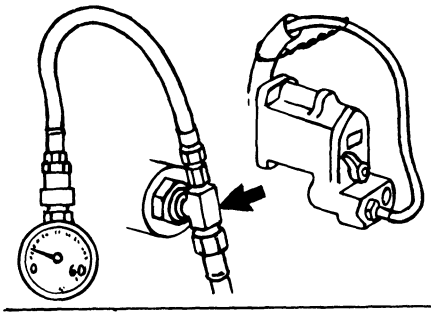	Disconnect clutch lube sender lead. Connect an ohmmeter to sender lead as shown: 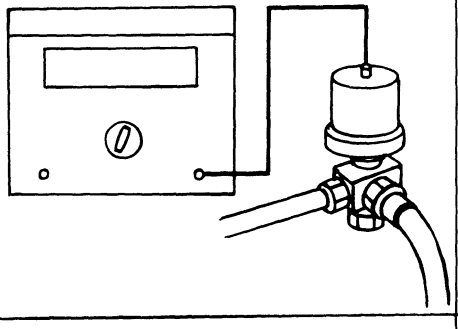	**GO TO F8**
F8 Increase engine speed or move SCV lever rearward and adjust metering lever to get 15 psi lube pressure. 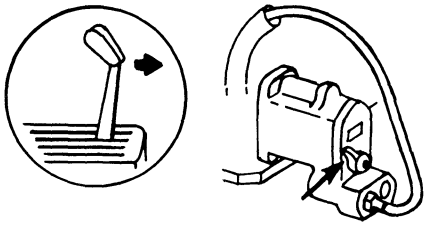	SPEC. LUBE PRESSURE OHMS 0 psi 0 15 psi 20 to 35	In Spec.: **GO TO F9** Out of spec.: Replace sender. Then... **GO TO F7**
F9 With clutch lube sender lead disconnected, connect JDST-33 gauge tester to sender lead. Dial 30 ohms. 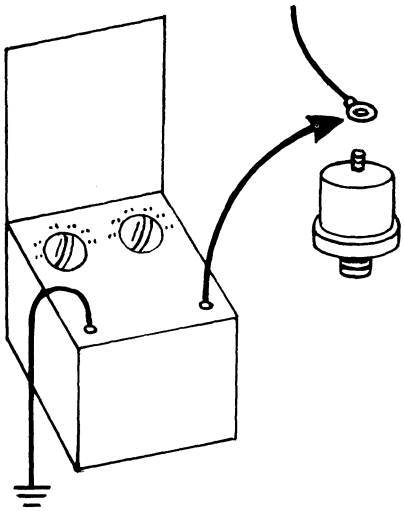	Clutch lube gauge needle location should be within ± 1/8 in. (3.1 mm) of black line. 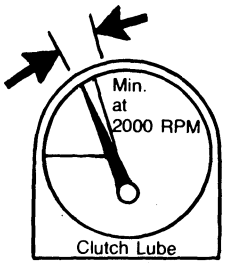	Gauge OK: **GO TO SECTION 2** Gauge NOT OK: Replace gauge. Then... **Repeat F9**

R32851

5

Step	*Sequence*	*Result*
(G1) **PROBLEM: TRANSMISSION LUBE LAMP "OUT".** Remove LH and RH steering control support cowling. 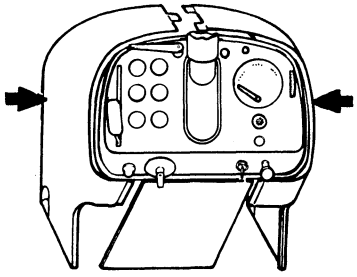 Reinstall cowling after repair.	Change transmission lube lamp. Transmission in gear. Hold key at "START". Lube lamp should be glowing. 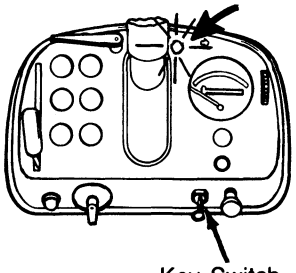	Lamp glows: **GO TO A5** Lamp does not glow: **GO TO G2**
(G2) Transmission in gear. Hold key switch at "START". 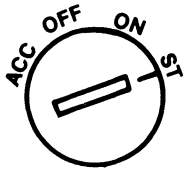	Check transmission lube lamp socket for continuity to ground. 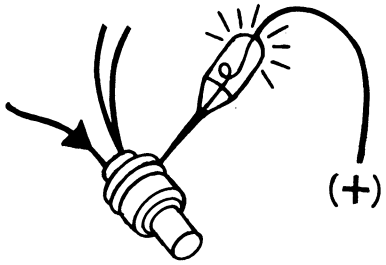	Continuity to ground: **GO TO G4** No continuity to ground: **GO TO G3**
(G3) There is an "OPEN" or "high resistance" at or between: 1. Lamp socket 2. Lamp diode 3. Lamp socket and key switch 4. Key switch "G" terminal 5. Key switch and ground		Repair circuit. Then... **GO TO A1**

5

Step	Sequence	Result
(G4) Remove bulb from socket. Key switch "ON". 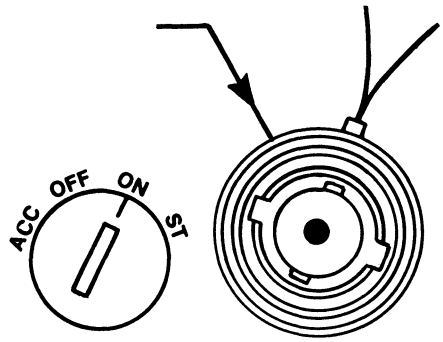	Check center terminal of socket for battery voltage. 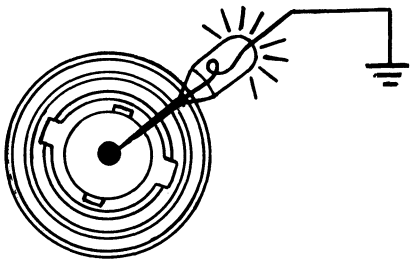	Battery voltage: **GO TO A5** Low or NO voltage: **GO TO G5**
(G5) There is "high resistance" or an "OPEN" circuit between lower LH circuit breaker (A) and lube lamp socket (B). 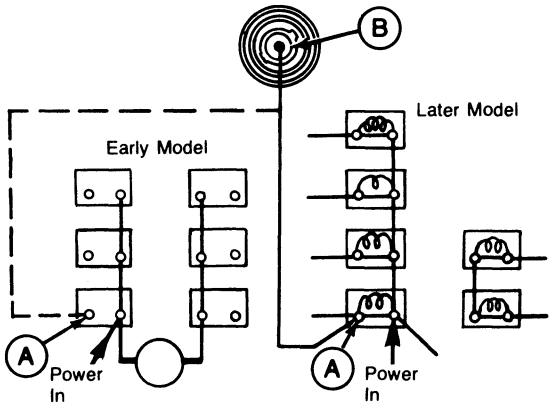		Repair circuit. Then... **GO TO G4**
(G6) Transmission lube circuit check. Engine "STOPPED". Ground junction coupler to clutch over-ride switch. 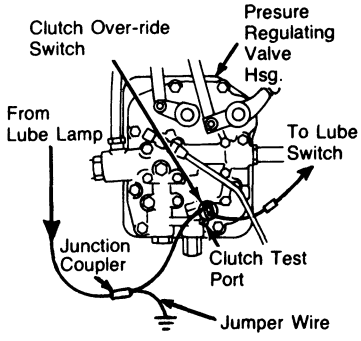 NOTE: Reconnect junction coupling after testing.	Key switch "ON". Lube lamp should be "ON". 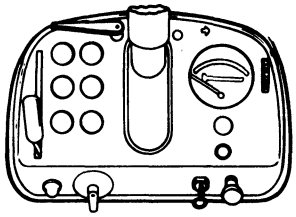	Lamp "ON": **GO TO G8** Lamp "OFF": **GO TO G7**

R32853

5

Step	*Sequence*	*Result*
G7 There is "high resistance" or an "OPEN" circuit at or between: 1. Lube lamp Ⓐ 2. Lube lamp Ⓐ and bulkhead connector Ⓑ or, 3. Bulkhead connector Ⓑ and junction coupler of clutch over-ride switch Ⓒ.	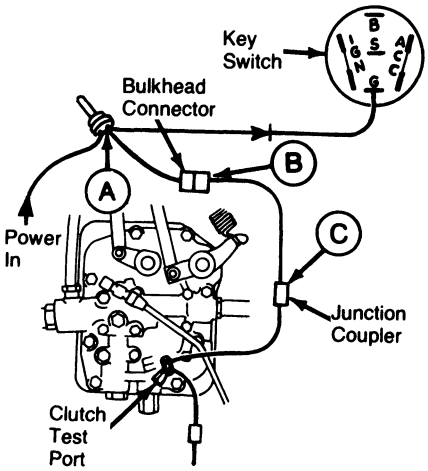	Repair circuit. Then... **GO TO A9**
G8 Connect jumper coupling to over-ride switch. Ground clutch over-ride switch coupler to transmission lube switch. 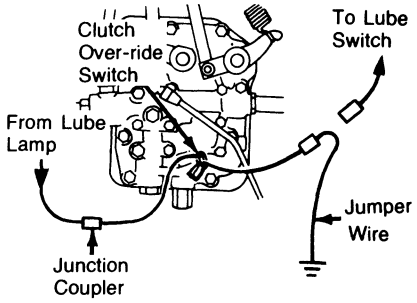	Engine "Running". Key switch "ON". Clutch pedal "UP". Lube lamp should be "ON". 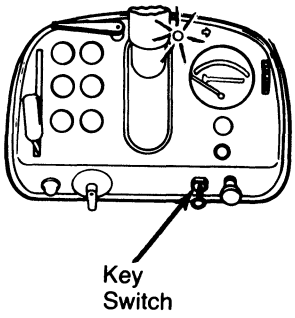	Lamp "ON": **GO TO G9** Lamp "OFF": Replace clutch. over-ride switch. Then... **GO TO A9**
G9 There is "high resistance" or an "OPEN" circuit between clutch over-ride switch Ⓐ and transmission lube switch Ⓑ.	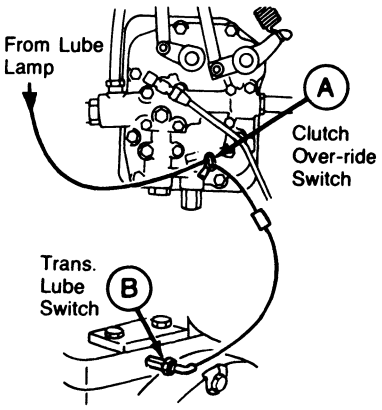	Repair circuit. Then... **GO TO A9**

5

R32854

Step	Sequence	Result

H1 Operational check of transmission oil indicator circuits (tractors without a transmission lube indicator lamp). Key switch "ON". Check indicator lamp as follows:

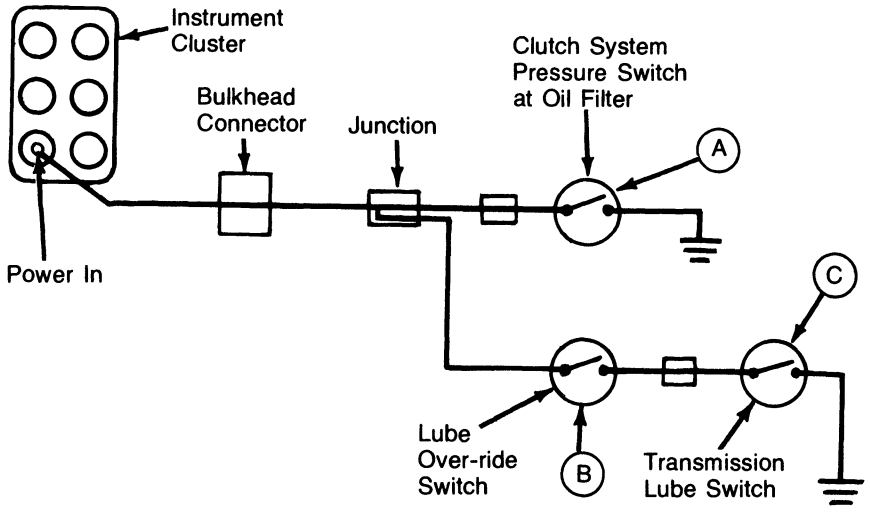

ENGINE	CLUTCH PEDAL	TRANS. OIL INDICATOR
STOPPED	UP OR DOWN	ON
RUNNING	UP	OFF
RUNNING	DOWN	OFF

ADDITIONAL INFORMATION

SWITCH Ⓐ	SWITCH Ⓑ	SWITCH Ⓒ
CLOSED	OPEN	CLOSED
OPEN	CLOSED	OPEN
OPEN	OPEN	CLOSED

Operation OK: **GO TO SECTION 2**

Operation NOT OK: **GO TO H2**

H2

Disconnect transmission lube and clutch pressure switch leads at junction. Key switch "ON". Check transmission oil indicator lamp as follows:

1. Engine "STOPPED". "Ground" junction lead.
   Lamp should be "ON".
   a. Lamp "OFF": Repair "OPEN" between junction lead and indicator lamp.
2. Engine "STOPPED". "OPEN" junction lead.
   Lamp should be "OFF".
   a. Lamp "ON": Repair ground between junction lead and indicator lamp.

OK: **GO TO H3**

NOT OK: Repair, Then... **GO TO H1**

5

Step	Sequence	Result
(H3)	Connect clutch pressure switch lead at junction (transmission lube switch lead disconnected). Key switch "ON". Check transmission oil indicator lamp as follows: 1. Engine "STOPPED". Lamp should be "ON". a. Possible causes if lamp "OFF": 1. Clutch switch not grounded. 2. "OPEN" between clutch switch and junction (or) 3. Faulty clutch switch. 2. Engine "RUNNING". Lamp should be "OFF". a. Possible causes if lamp "ON": 1. "GROUND" between clutch switch and junction. 2. "LOW" clutch pressure (or) 3. Faulty clutch switch.	OK: **GO TO H4** NOT OK: Repair, Then... **GO TO H1**
(H4)	Disconnect clutch pressure switch at junction. Connect transmission lube switch at junction. "GROUND" lead at transmission lube switch. Key switch "ON". Check transmission oil indicator lamp as follows: 1. Engine "Running". Clutch pedal "UP". Lamp should be "ON". a. Possible causes if lamp "OFF": 1. Faulty lube over-ride switch (or) 2. "OPEN" circuit between transmission lube switch and junction. 2. Engine "RUNNING". Clutch pedal "DOWN". Lamp should be "OFF". a. Possible causes if lamp "ON": 1. Faulty lube over-ride switch (or) 2. "GROUNDED" circuit between lube over-ride switch and junction.	OK: **GO TO H5** NOT OK: Repair, Then... **GO TO H1**

5

R32856

Step	Sequence	Result
(H5)	Connect transmission lube pressure switch at junction. Key switch "ON". 1. Engine at 1000 RPM. Clutch pedal "UP". Transmission oil indicator should be "OUT". a. Possible causes if lamp "ON": 1. "LOW" transmission pump pressure (or) 2. Faulty transmission lube pressure switch.	OK: GO TO H6 NOT OK: Repair, Then... GO TO H1
(H6)	Connect clutch and transmission lube pressure switches.	GO TO H1
	OPTIONAL: Up date transmission lube circuit with AR77180 transmission lube lamp kit. A separate lamp will be installed in instrument panel.	GO TO A1

R32857

5

Step	Sequence	Result
(A1) OPERATIONAL CHECK OF LIGHTING CIRCUIT.		

8430 (-005928)
8630 (-008118)

	Lamps Operating				
Light switch position	W	H	H	F	F
Dimmer switch position		Hi	Lo	Hi	Lo
Warning lamps and indicators	X	X	X		
Tail lamps		X	X		
Instrument and console lamps		X	X	X	X
Head lamps		X	X	X	X
High beam indicator lamp		X		X	
Front flood lamps		X		X	X
Rear upper flood lamps (without auxiliary light switch)				X	X

8430 (-005928)
8630 (-008118) (with auxiliary light switch)

Main light switch position	F	F	F
Auxiliary light switch position	W	H	F
Rear upper flood lamps	X	X	
Rear lower flood lamps		X	X

All lamps operative: **GO TO A2**

Any lamp inoperative: **GO TO A4**

8430 (005928-)
8630 (008110-)

	Lamps Operating				
Light switch position	W	H	H	F	F
Dimmer switch position		Hi	Lo	Hi	Lo
Warning lamps and indicators	X	X	X		
Tail lamps		X	X		
Instrument and console lamps		X	X	X	X
Head lamps		X	X	X	X
Front flood lamps		X		X	X
High beam indicator lamp		X		X	
Rear upper flood lamps				X	
Rear lower flood lamps				X	X

All lamps operative: **GO TO A2**

Any lamp inoperative: **GO TO A4**

SGB door "OPEN"	Lamp "ON"	
SGB door "CLOSED" and Dome lamp switch "ON"	Lamp "ON"	
(A2) Position turn signal controller lever for LH then RH turn.	Turn signal indicator and warning lamps "FLASHING" on one side. Lamps on opposite side will glow "STEADY".	All lamps operative: **GO TO SECTION 2** Lamps inoperative: **GO TO A3**

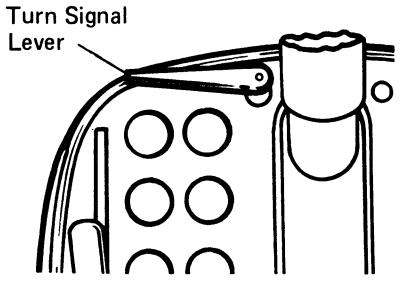

R32858

6

Step	Sequence	Result
A3 One of the following problems exists:* 1. "OPEN" ground lead between lamp and screw above circuit breaker panel. 2. "OPEN" circuit between LH 2nd circuit breaker from bottom and turn signal controller (dark blue wire) (or) 3. Turn signal controller "OPEN" between terminals No. 2 and No. 3 or No. 4. * 8430 (-005928) See schematic 8630 (-008118) No. 6-1 8430 (005928-) See schematic 8630 (008118-) No. 6-9		Repair circuit. Then . . . **GO TO A2**
A4 Check ground wire at starter drive housing and front of SGB frame for good contact.	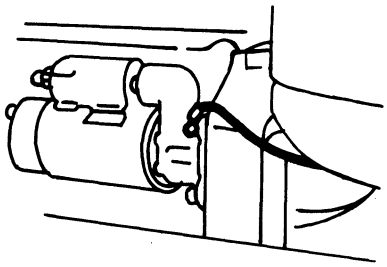	OK: **GO TO A5** Not OK: Repair. Then . . . **GO TO A1**
A5 One or both lamps of a pair do not operate. Remove necessary mounting or shielding around lamp. Position switch(s) for lamp operation. 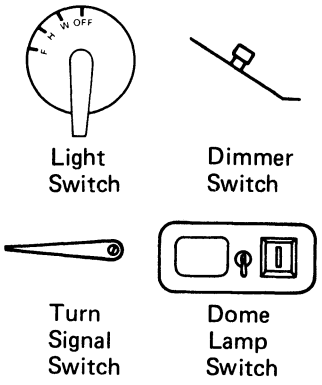 Light Switch Dimmer Switch Turn Signal Switch Dome Lamp Switch	Check lamp ground circuit for voltage at Ⓓ . 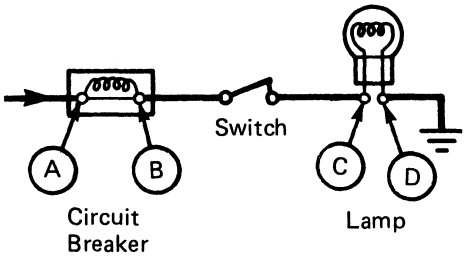 Circuit Breaker Lamp	No voltage: OK: **GO TO A6** Voltage: Repair ground circuit. Then . . . **GO TO A1**

R32859

6

Step	*Sequence*	*Result*
A6 Position switch(s) for lamp operation. 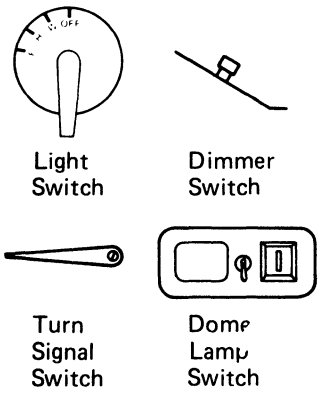	Check power lead for battery voltage at Ⓒ . 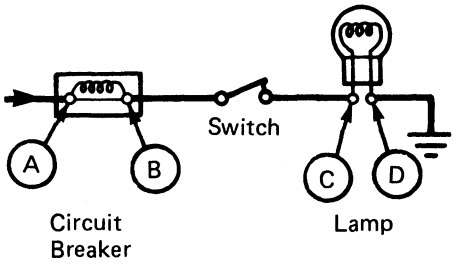	Battery voltage: Replace lamp. Then... **GO TO A1** No voltage: Low voltage: "C" light: **GO TO A7**
A7 The following schematics give a review of current flow to a component or lamp from a circuit breaker through a switch or relay. Fold out the step-by-step sequence (Section 0, for use with a probe light or for use with a voltage detector). Reference the schematic required from chart below for isolating malfunction to a component or wiring problem. 8430 (-005928) Without auxiliary 8630 (-008118) light switch. Malfunction occurs with:		

Light switch positioned at:	W	H	H	F	F
Dimmer switch positioned at:		Hi	Lo	Hi	Lo
Reference schematic No. 6—	1	2	3	4	5

8430 (-005928) With auxiliary
8630 (-008118) light switch.

Repair circuit. Then... **GO TO A1**

Malfunction occurs with:

Light switch positioned at:	F	F	F
Main auxiliary light switch positioned at:	W	H	F
Reference schematic No. 6—	6	7	8

8430 (005928-)
8630 (008118-)

Malfunction occurs with:

Light switch positioned at:	W	H	H	F	F
Dimmer switch positioned at:		Hi	Lo	Hi	Lo
Reference schematic No. 6—	9	10	11	12	13

6

R32860

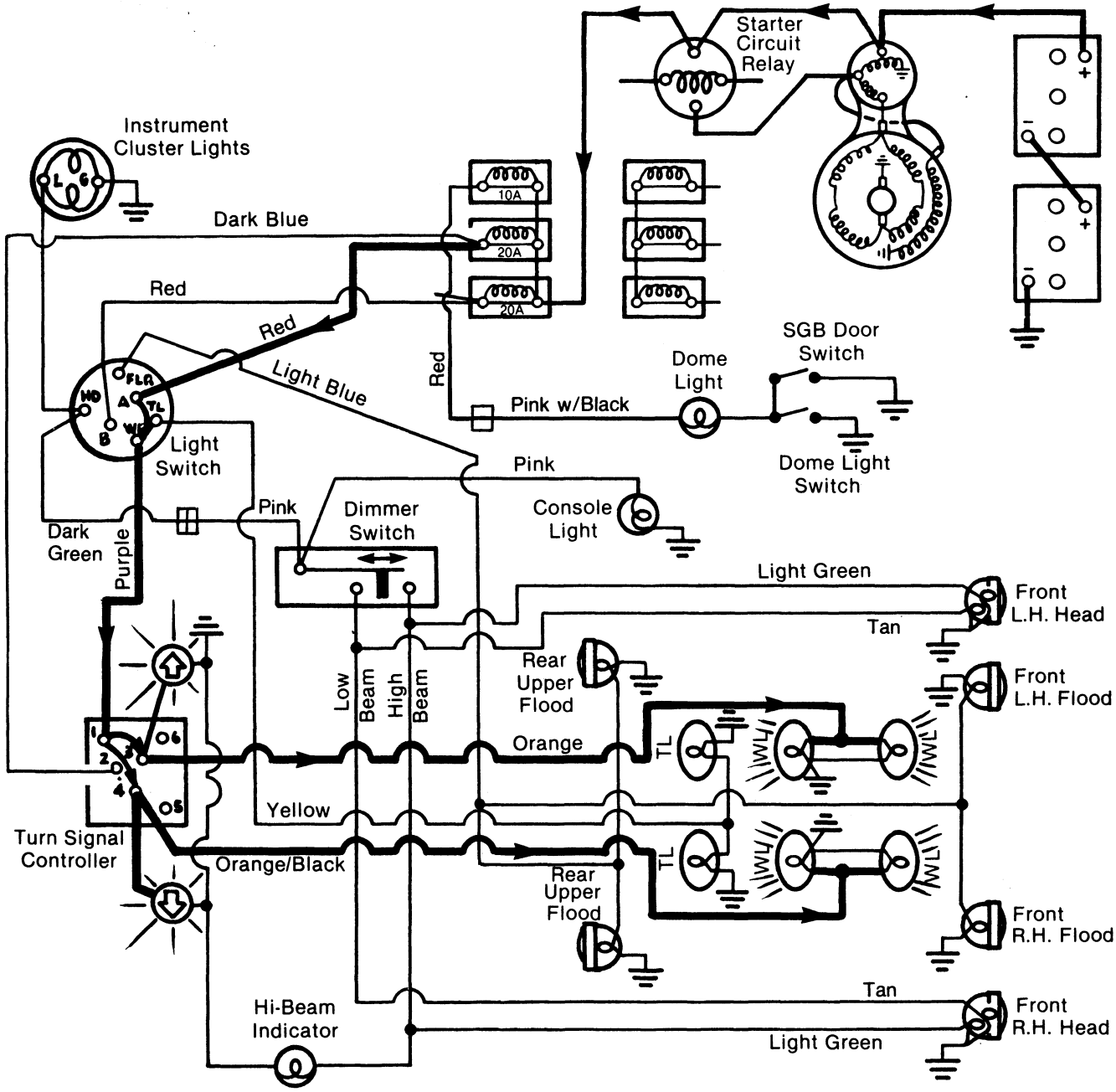

6

8430 (-005928)
8630 (-008118)

Schematic No. 6-1

Light switch at "W"
Lamps operating:

1. Warning
2. Turn signal indicator

R32861

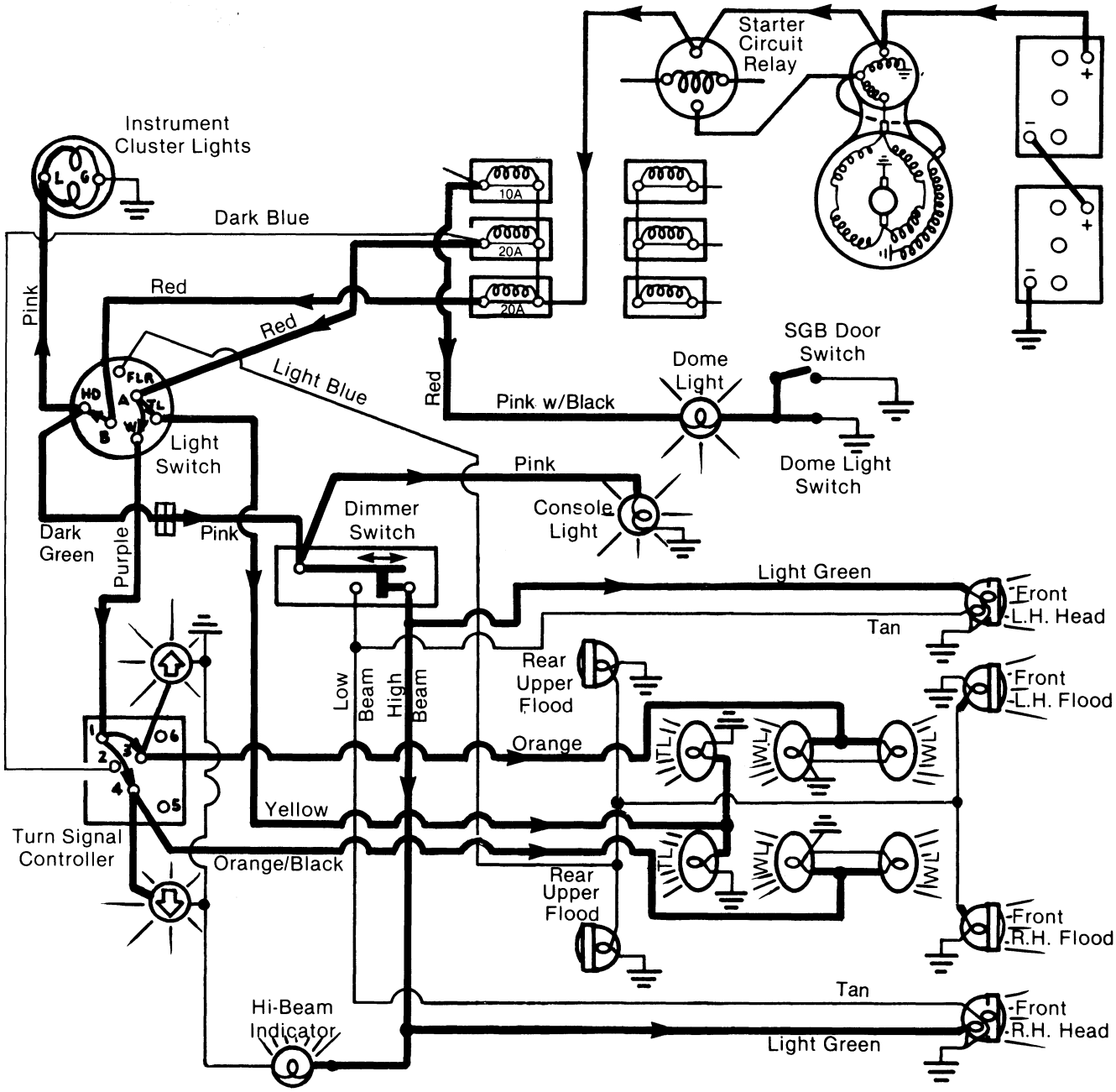

6

8430 (-005928)
8630 (-008118)

Schematic No. 6-2

Light switch at "H"
Dimmer switch "HIGH" beam
Lamps operating:

1. Warning
2. Head (high)
3. Tail

R32862

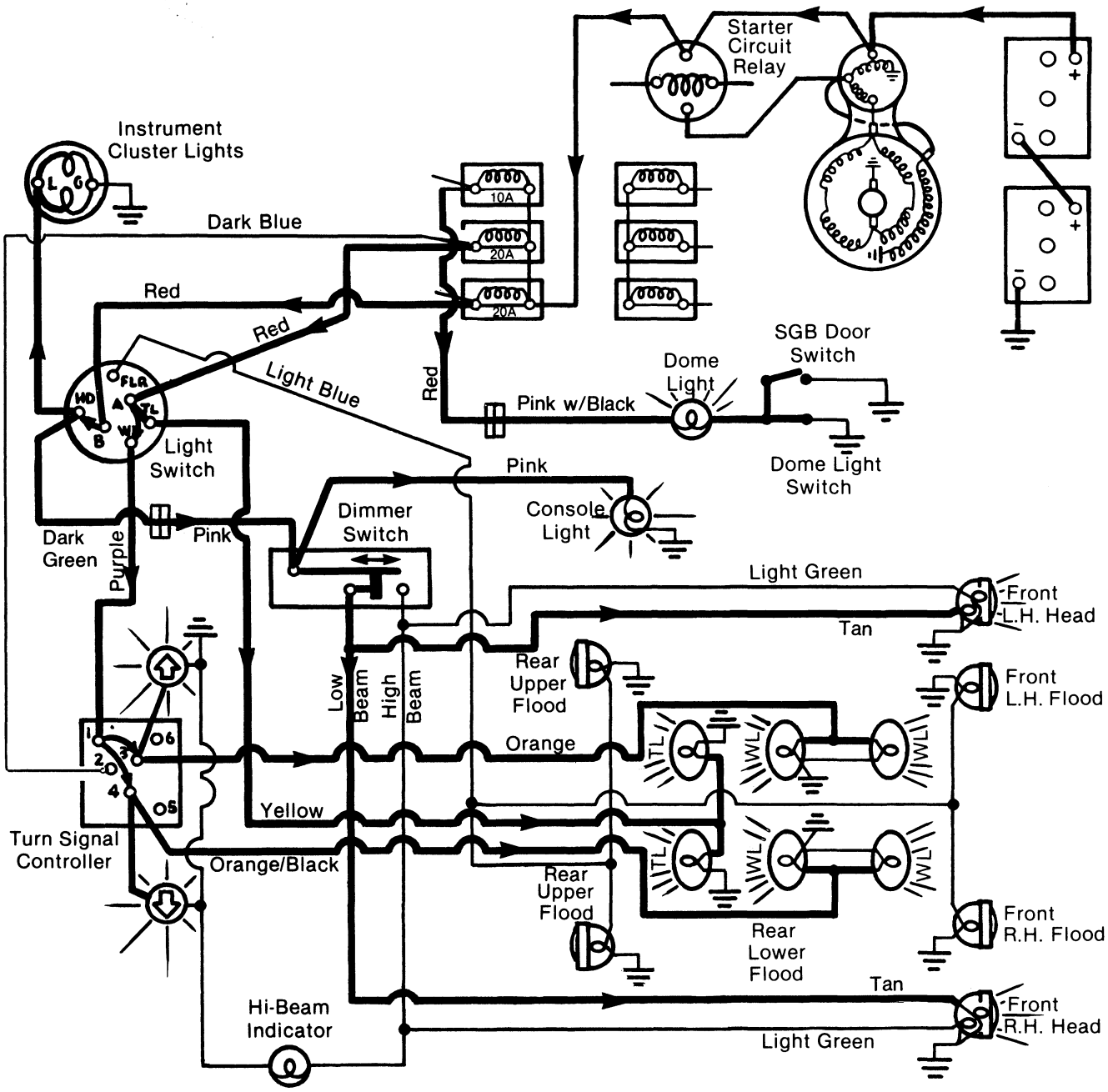

8430 (-005928)
8630 (-008118)

Schematic No. 6-3

Light switch at "H"
Dimmer switch at "LOW" beam
Lamps operating:

1. Warning
2. Head (low)
3. Tail

6

R32863

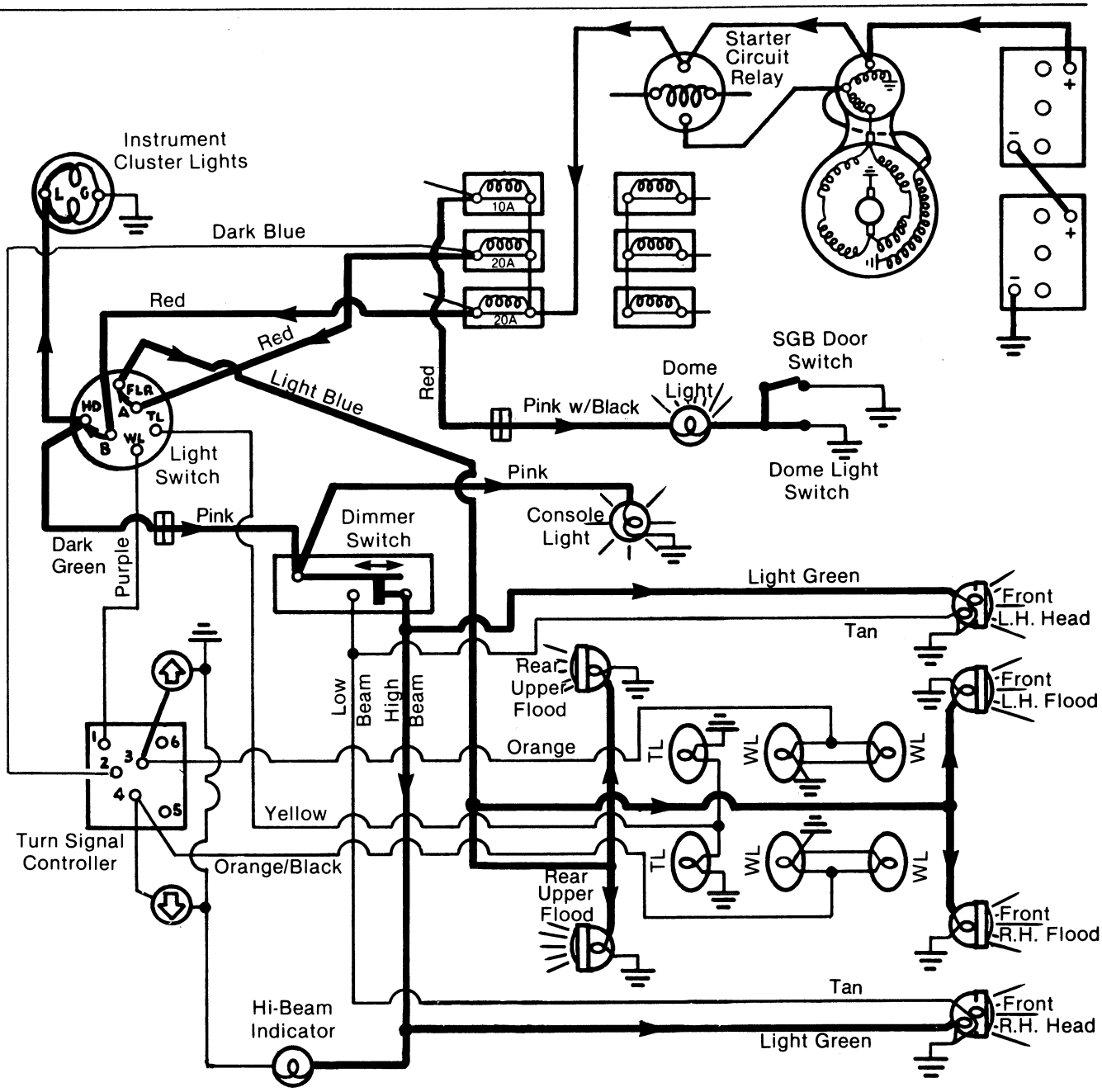

8430 (-005928)
8630 (-008118)

Schematic No. 6-4

Light switch at "F"
Dimmer switch at "HIGH" beam

Lamp operating:

1. Head (high)
2. Front flood
3. Rear upper flood
4. Rear lower flood

R32864

6

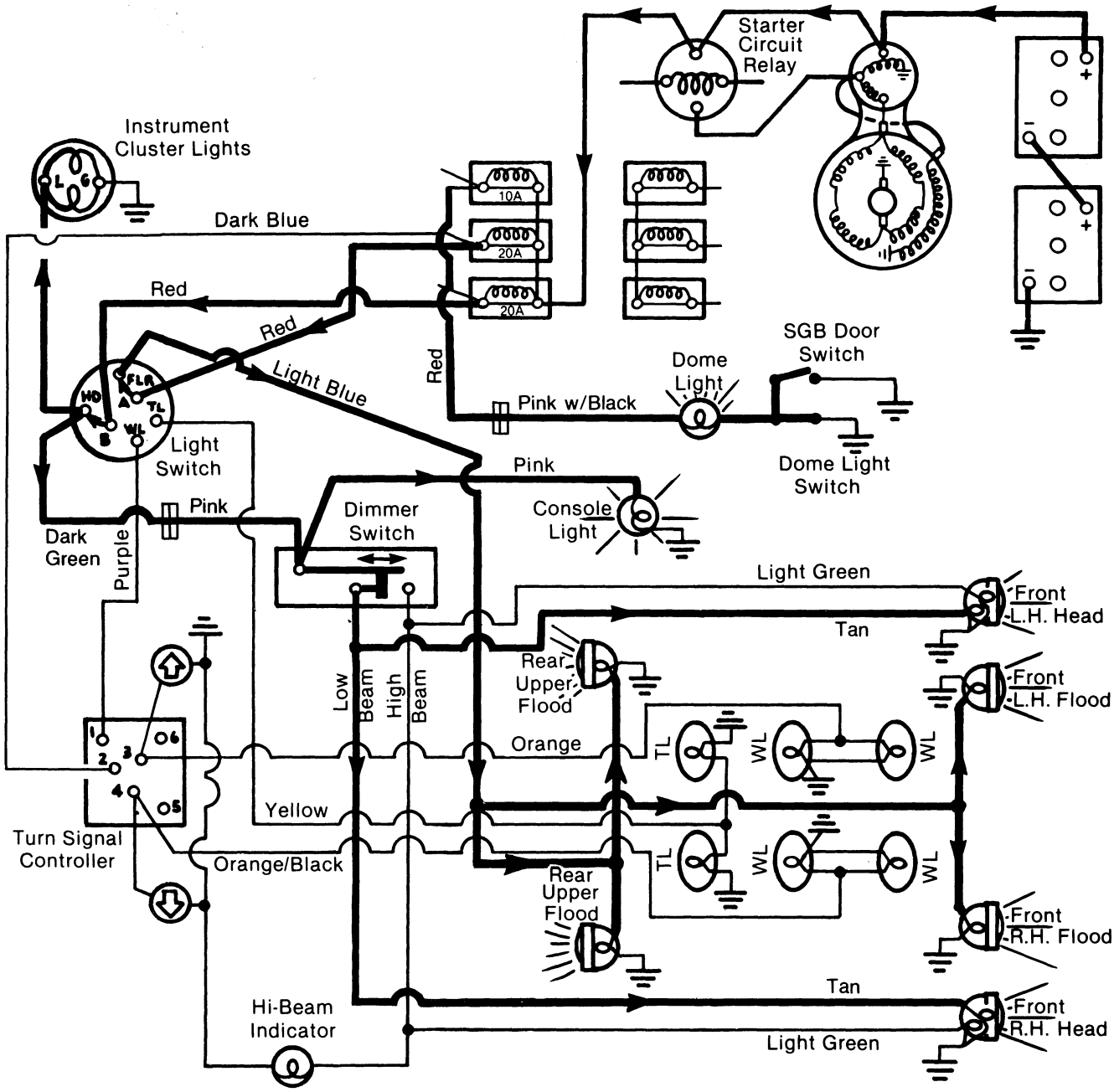

8430 (-005928)
8630 (-008118)

Schematic No. 6-5

Light switch at "F"
Dimmer switch "LOW" beam
Lamps operating:

1. Head (low)
2. Front flood
3. Rear lower flood

R32865

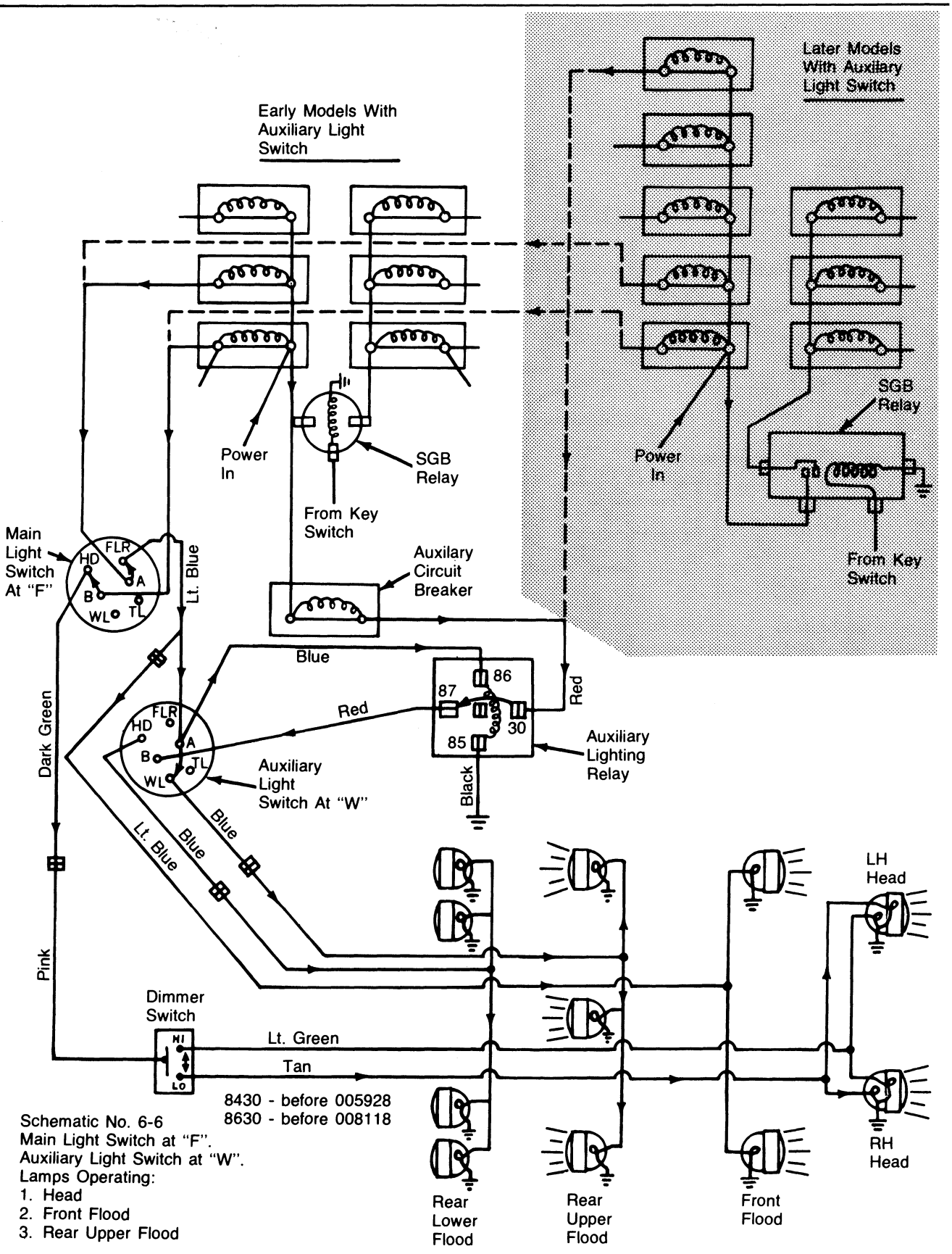

8430 - before 005928
8630 - before 008118

Schematic No. 6-6
Main Light Switch at "F".
Auxiliary Light Switch at "W".
Lamps Operating:
1. Head
2. Front Flood
3. Rear Upper Flood

NOTE: ⊣⊢ symbol represents bulkhead connector

R32866

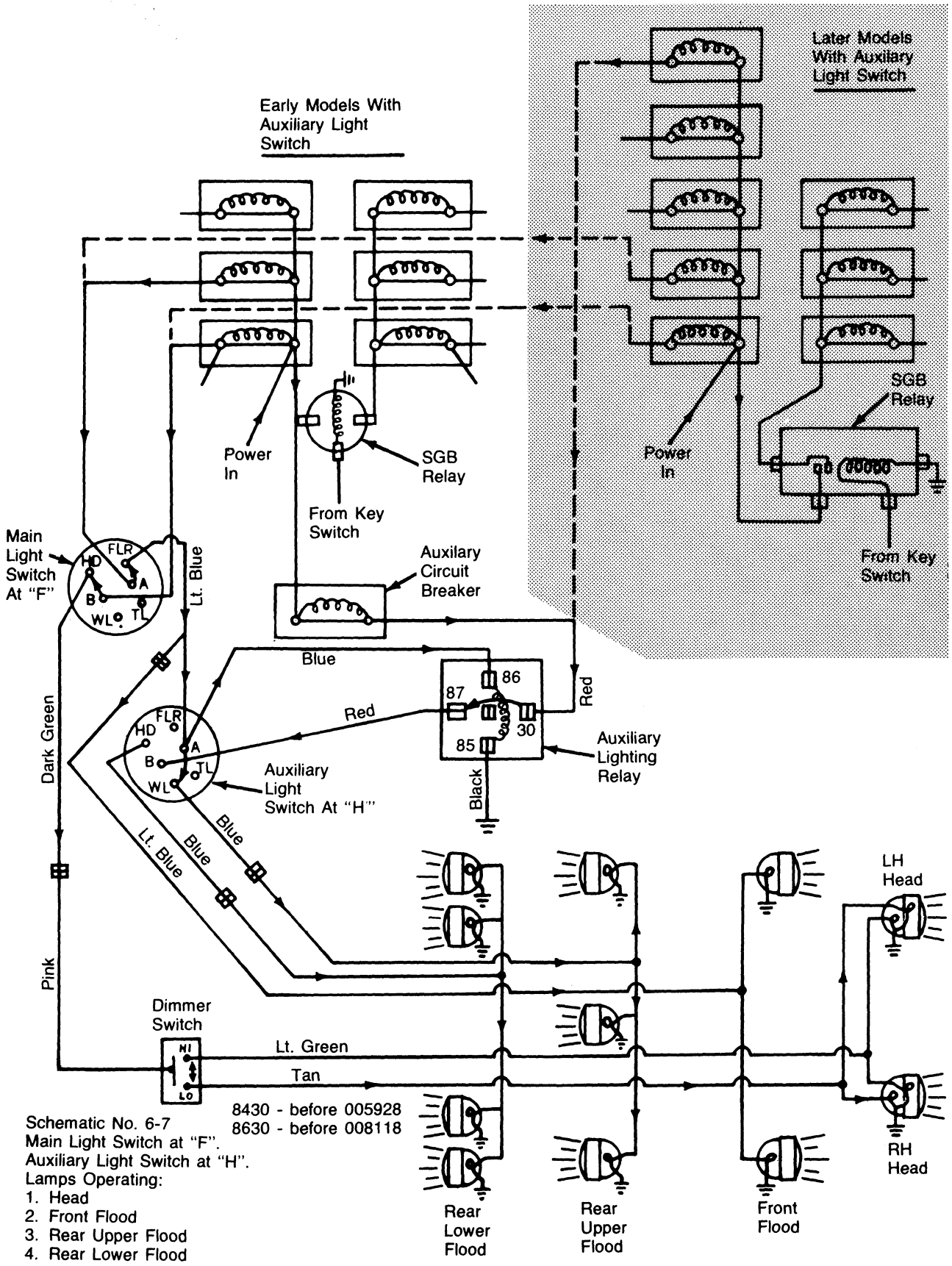

Schematic No. 6-7
Main Light Switch at "F".
Auxiliary Light Switch at "H".
Lamps Operating:
1. Head
2. Front Flood
3. Rear Upper Flood
4. Rear Lower Flood

8430 - before 005928
8630 - before 008118

NOTE: ⊣⊢ symbol represents bulkhead connector

R32867

6

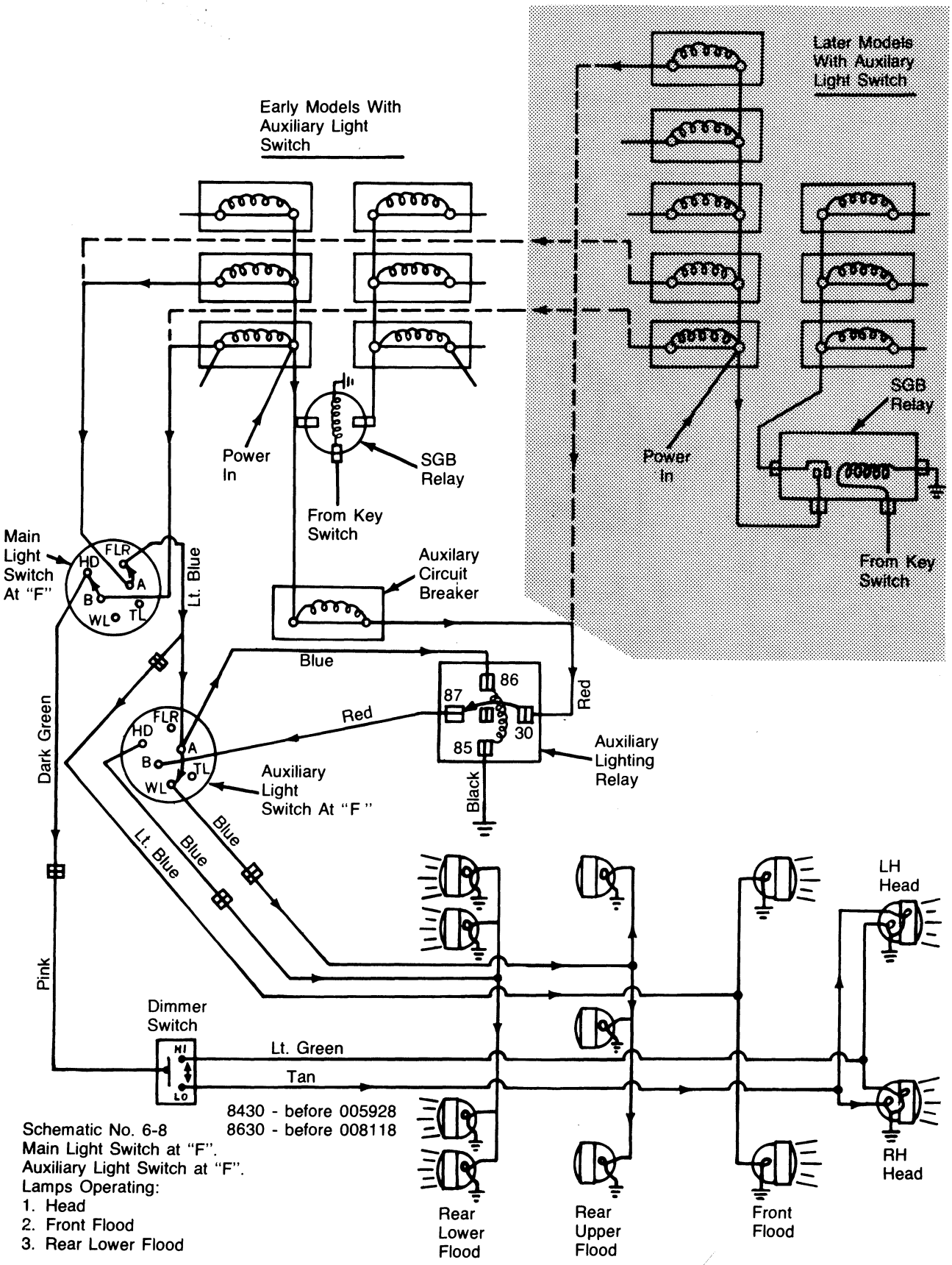

Schematic No. 6-8
Main Light Switch at "F".
Auxiliary Light Switch at "F".
Lamps Operating:
1. Head
2. Front Flood
3. Rear Lower Flood

8430 - before 005928
8630 - before 008118

NOTE: ⊣⊢ symbol represents bulkhead connector

R32868

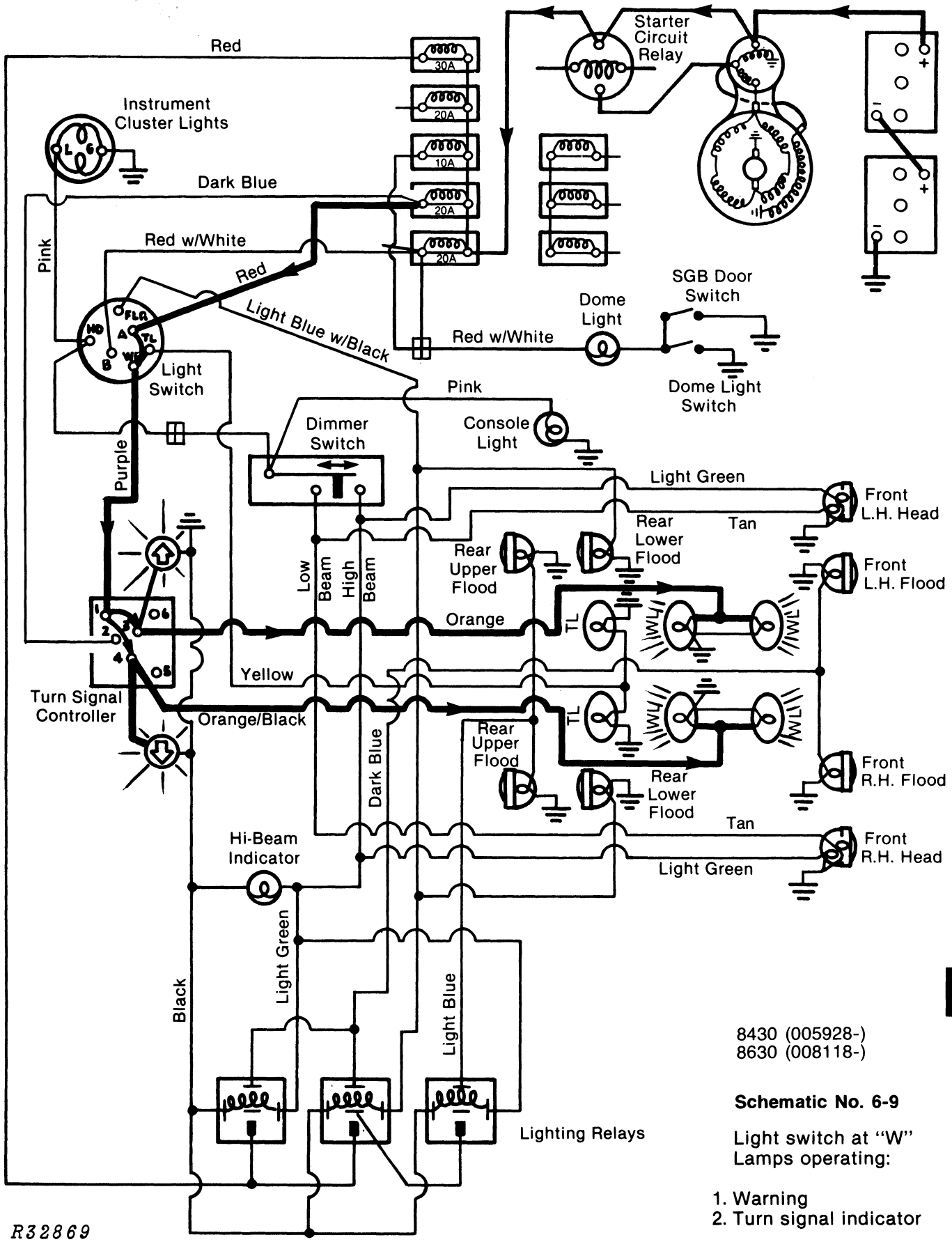

8430 (005928-)
8630 (008118-)

Schematic No. 6-9

Light switch at "W"
Lamps operating:

1. Warning
2. Turn signal indicator

6

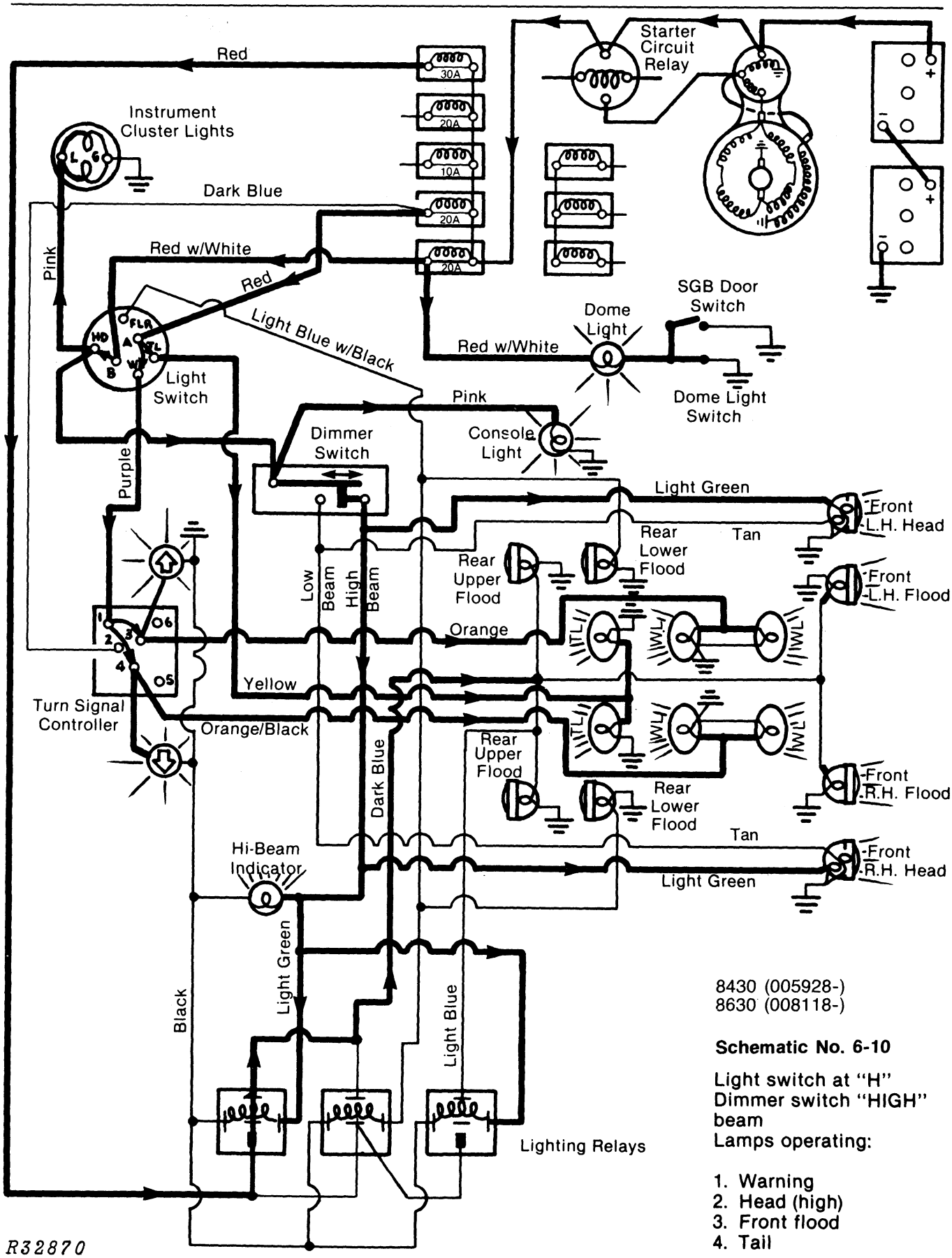

8430 (005928-)
8630 (008118-)

Schematic No. 6-10

Light switch at "H"
Dimmer switch "HIGH" beam
Lamps operating:

1. Warning
2. Head (high)
3. Front flood
4. Tail

R32870

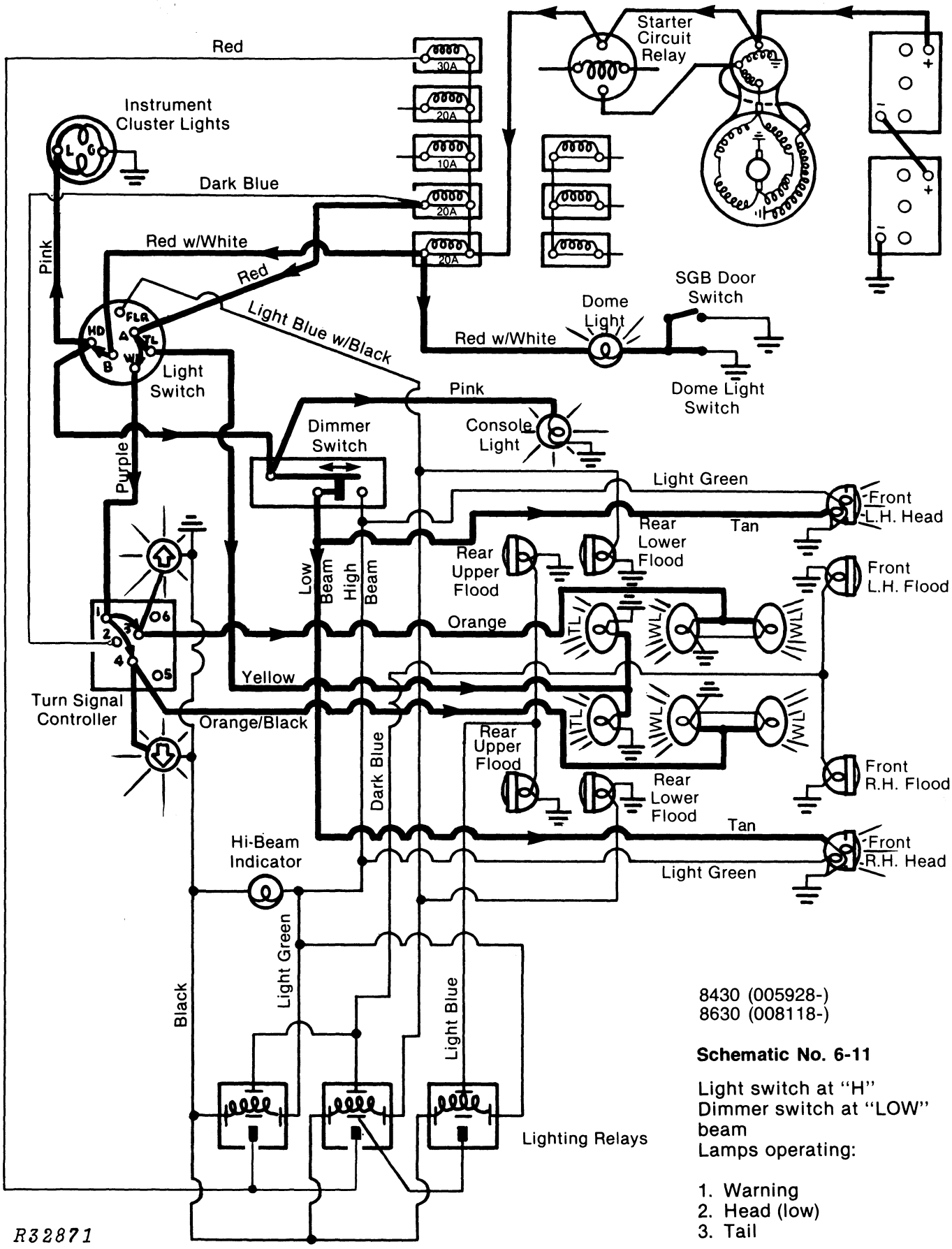

8430 (005928-)
8630 (008118-)

Schematic No. 6-11

Light switch at "H"
Dimmer switch at "LOW" beam
Lamps operating:

1. Warning
2. Head (low)
3. Tail

6

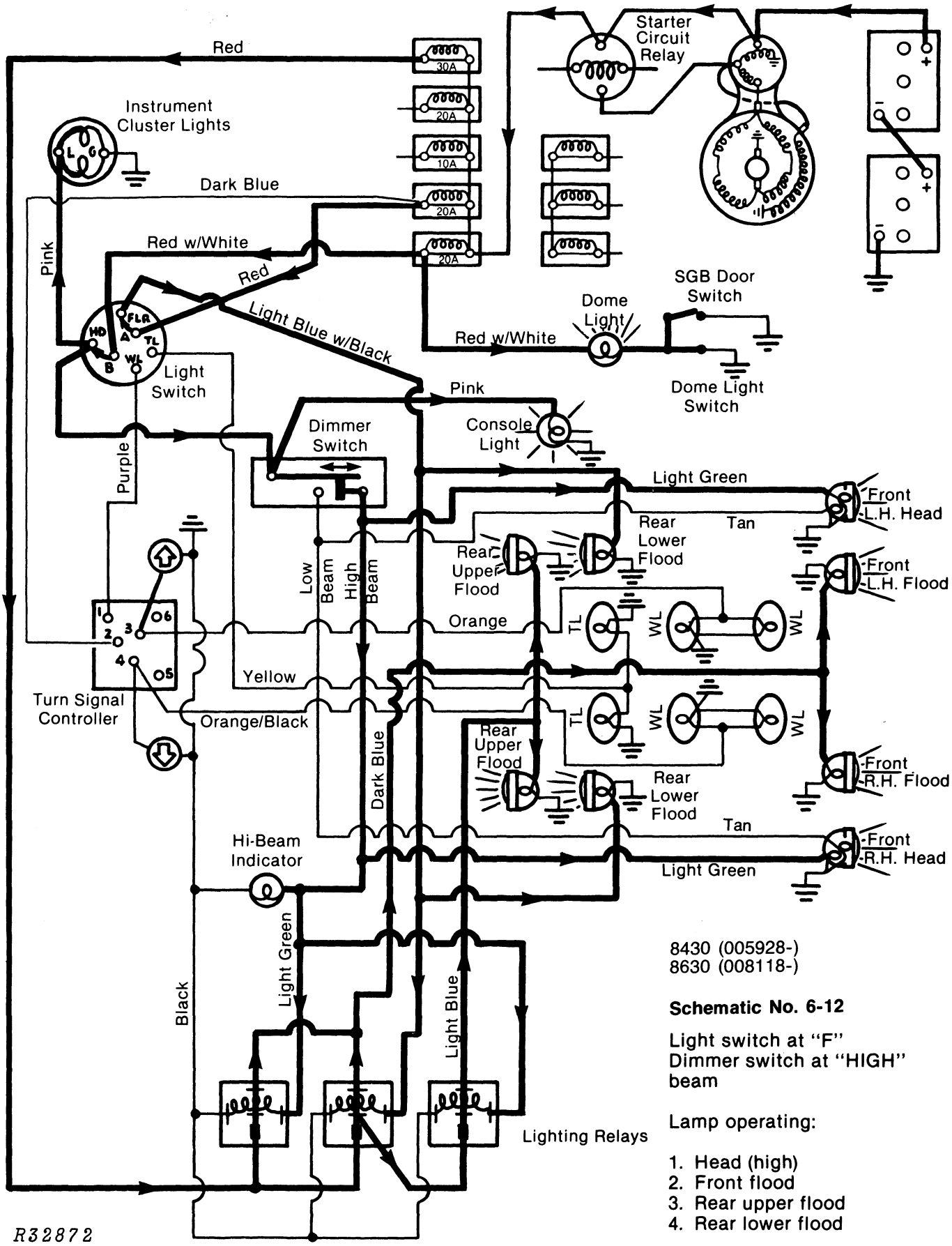

8430 (005928-)
8630 (008118-)

Schematic No. 6-12

Light switch at "F"
Dimmer switch at "HIGH" beam

Lamp operating:

1. Head (high)
2. Front flood
3. Rear upper flood
4. Rear lower flood

6

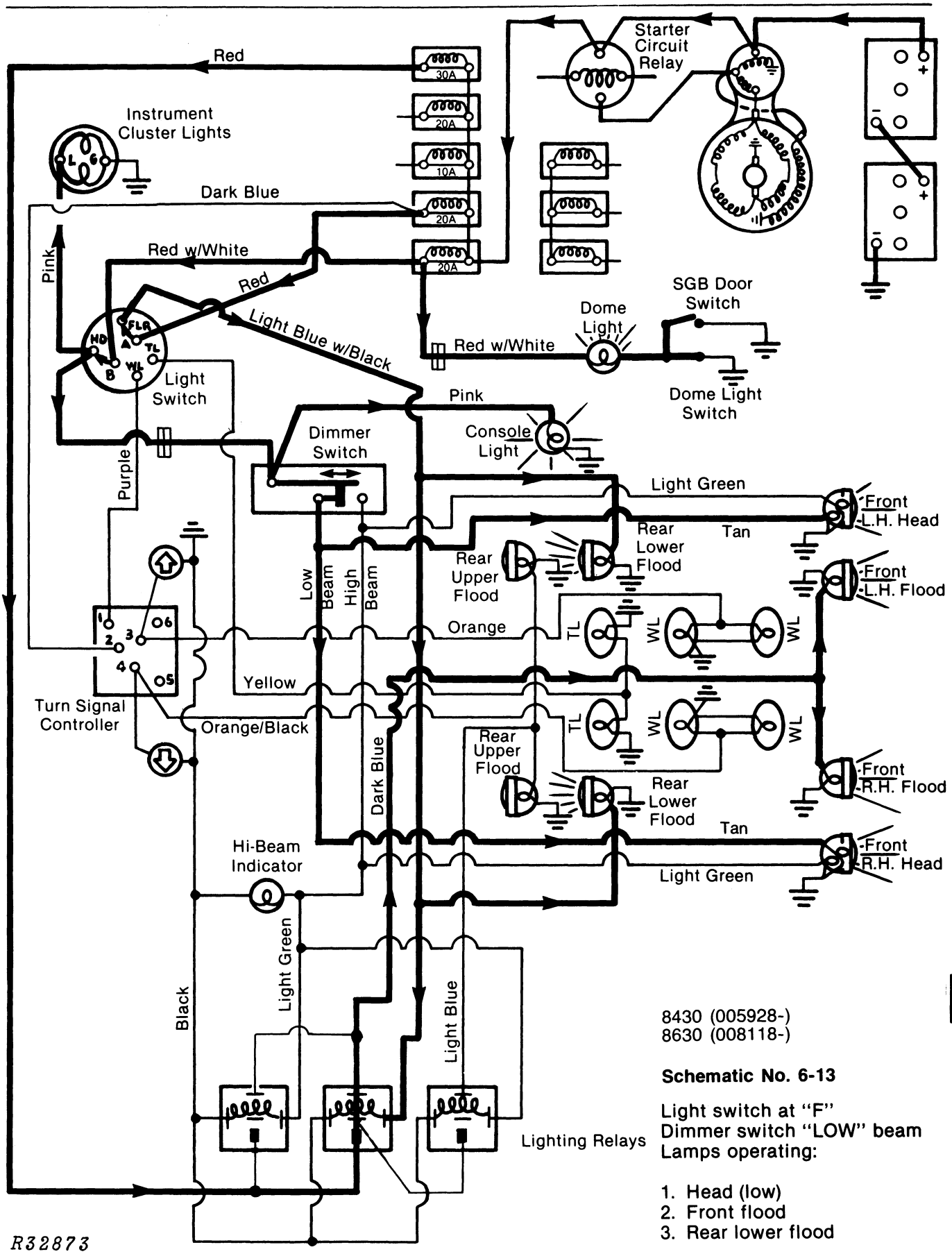

8430 (005928-)
8630 (008118-)

Schematic No. 6-13

Light switch at "F"
Dimmer switch "LOW" beam
Lamps operating:

1. Head (low)
2. Front flood
3. Rear lower flood

R32873

6

SGB ACCESSORY CIRCUITS

Step	*Sequence*	*Result*
A1 **OPERATIONAL CHECK:** **Three-speed switch GO TO B1** **(SGB with 2-speed blower switch)** Key switch "ON". Blower switch at "HIGH". Momentarily turn LH wiper switch to "SLOW". 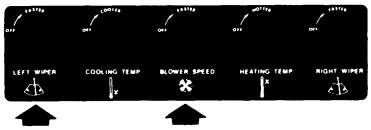	Observe LH blower and LH wiper motors for operation. 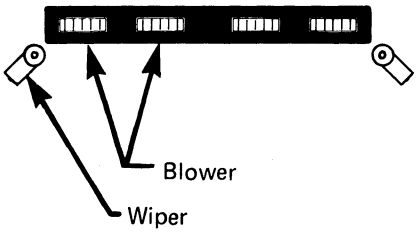	Both operate: **GO TO A2** One operates: **GO TO A3** Neither operates: **GO TO A4**
A2 Key switch "ON". Blower switch at "HIGH". Momentarily turn RH wiper switch to "SLOW". 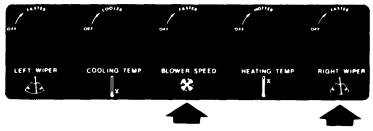	Observe RH blower and RH wiper motors for operation. 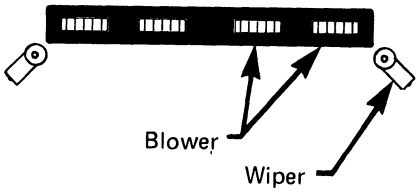	Both operate: **GO TO A5** One operates: **GO TO A3** Neither operates: **GO TO A4**
A3 There is "SUFFICIENT" voltage to the SGB control panel. Reference schematic No. 7-1 to isolate malfunction to a motor or wiring problem.		Repair circuit. Then... **GO TO A1**
A4 There is "INSUFFICIENT" voltage to the SGB control panel. Reference schematic No. 7-1 and 7-2 to isolate malfunction to a motor or wiring problem.		Repair circuit. Then... **GO TO A1**
A5 Key switch "ON". Blower switch at "HIGH". If ambient temperature is below 35°F (2°C), go to A7. Listen for an audible click of compressor clutch engagement as you turn cooling temp. control to "MAX. COOLING". 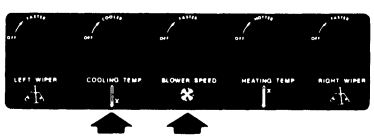	Observe LH blower motor for operation. 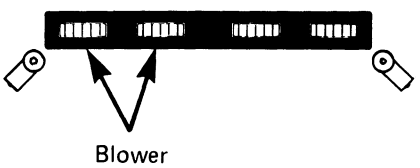	Audible click and motor operating: **GO TO A7** No click and LH motor stops operating: Clutch circuit "GROUNDED" **GO TO A6** No click and motor operating. Clutch circuit "OPEN" **GO TO A6**

R32874

Litho in U.S.A.

Step	Sequence	Result
A6 Reference schematic No. 7-1 to isolate malfunction between the blower switch and compressor clutch.		Repair circuit. Then... **GO TO A1**
A7 Key switch "ON". Blower switch at "SLOW". 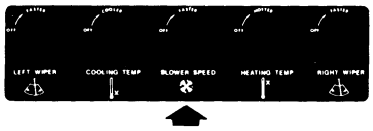	Observe both blower motors for operation. 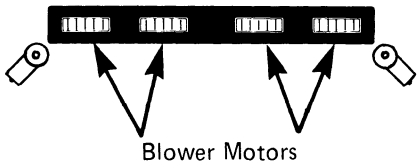	Motors operating: **GO TO A9** Motors not operating **GO TO A8**
A8 Reference schematic No. 7-2 to isolate malfunction to a blower switch or wiring problem.		Repair circuit. Then... **GO TO A1**
A9 Key switch "ON". Momentarily turn LH and RH wiper switches to "FAST" speed. 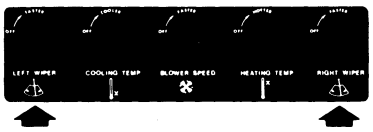	Observe operation of both wiper motors. 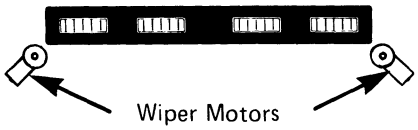	Motors operating OK: **GO TO SECTION 2** Motors do not operate properly: **GO TO A10**
A10 Reference schematics No.'s 7-5, 7-6, 7-7 for checking continuity through wiper motor circuits.		Repair circuit. Then... **GO TO A1**
B1 **OPERATIONAL CHECK: (SGB with 3-speed blower switch)** Key switch "ON". Turn LH and RH wiper switches momentarily to "SLOW" speed. 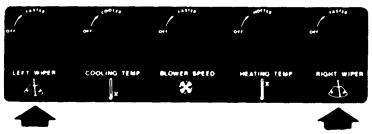	Observe LH and RH wiper motors for operation. Repeat check at "FAST" speed.	Both operate properly: **GO TO B4** One does not operate properly: **GO TO B3** Neither operates: **GO TO B2**
B2 There is "INSUFFICIENT" voltage to wiper motor switches from wiper circuit breaker or SGB relay. Reference schematic No. 7-3.		Repair circuit. Then... **GO TO B1**

R32875

Step	*Sequence*	*Result*
(B3) There is "SUFFICIENT" voltage to SGB roof from wiper circuit breaker. Reference schematic No.'s 7-5, 7-6 and 7-7 for checking continuity through wiper motor circuits.		Repair circuit. Then... **GO TO B1**
(B4) Key switch "ON". Blower switch at "SLOW". 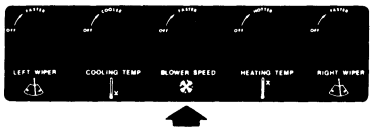	Observe blower motor operation and volume of air flow. 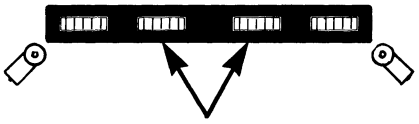 Repeat check at "MEDIUM" and "FAST" speeds.	Motor operation OK: **GO TO B8** Motor does not operate: **GO TO B5** Motor does not operate at all speeds: **GO TO B7**
(B5) Key switch "ON". Blower switch at "FAST". 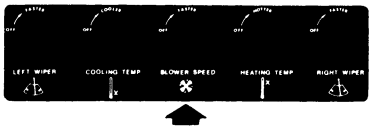	Listen for audible click as you turn temp. cooling switch to "MAX" cooling. 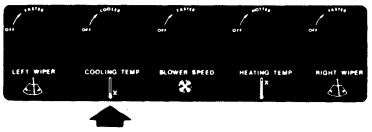	Audible click: **GO TO B7** No audible click: **GO TO B6**
(B6) There is "INSUFFICIENT" voltage to SGB roof from blower circuit breaker. Reference schematic No. 7-3 to isolate malfunction.		Repair circuit. Then... **GO TO B1**
(B7) There is "SUFFICIENT" voltage to SGB roof from blower circuit breaker. Reference schematic No. 7-4 to isolate malfunction.		Repair circuit. Then... **GO TO B1**
(B8) Key switch "ON". Blower switch at "SLOW". Listen for an audible click of compressor clutch engagement as you turn cooling temp. control to "MAX" cooling. NOTE: Clutch will not engage below 35°F (2°C). 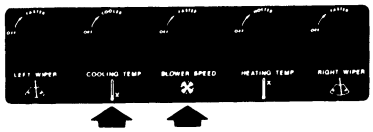	Observe blower motor for operation. 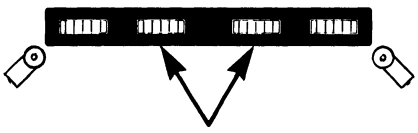	Audible click and motor operating: **GO TO SECTION 2** No click and motor stops operating: Clutch circuit "GROUNDED" **GO TO B9** No click and motor operating: Clutch circuit "OPEN" **GO TO B9**
(B9) Reference schematic No. 7-3 to isolate malfunction.		Repair circuit. Then... **GO TO B1**

7

R32876

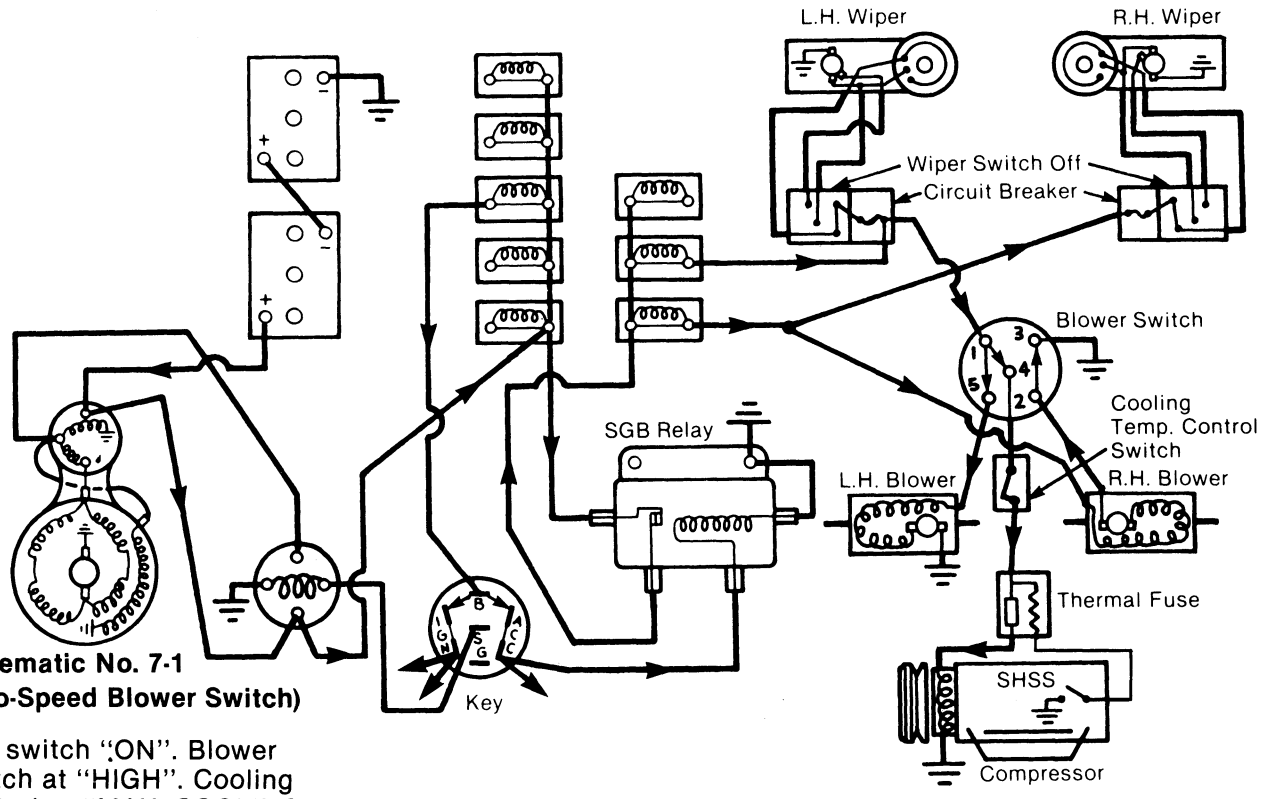

Schematic No. 7-1
(Two-Speed Blower Switch)

Key switch "ON". Blower switch at "HIGH". Cooling control at "MAX. COOLING".

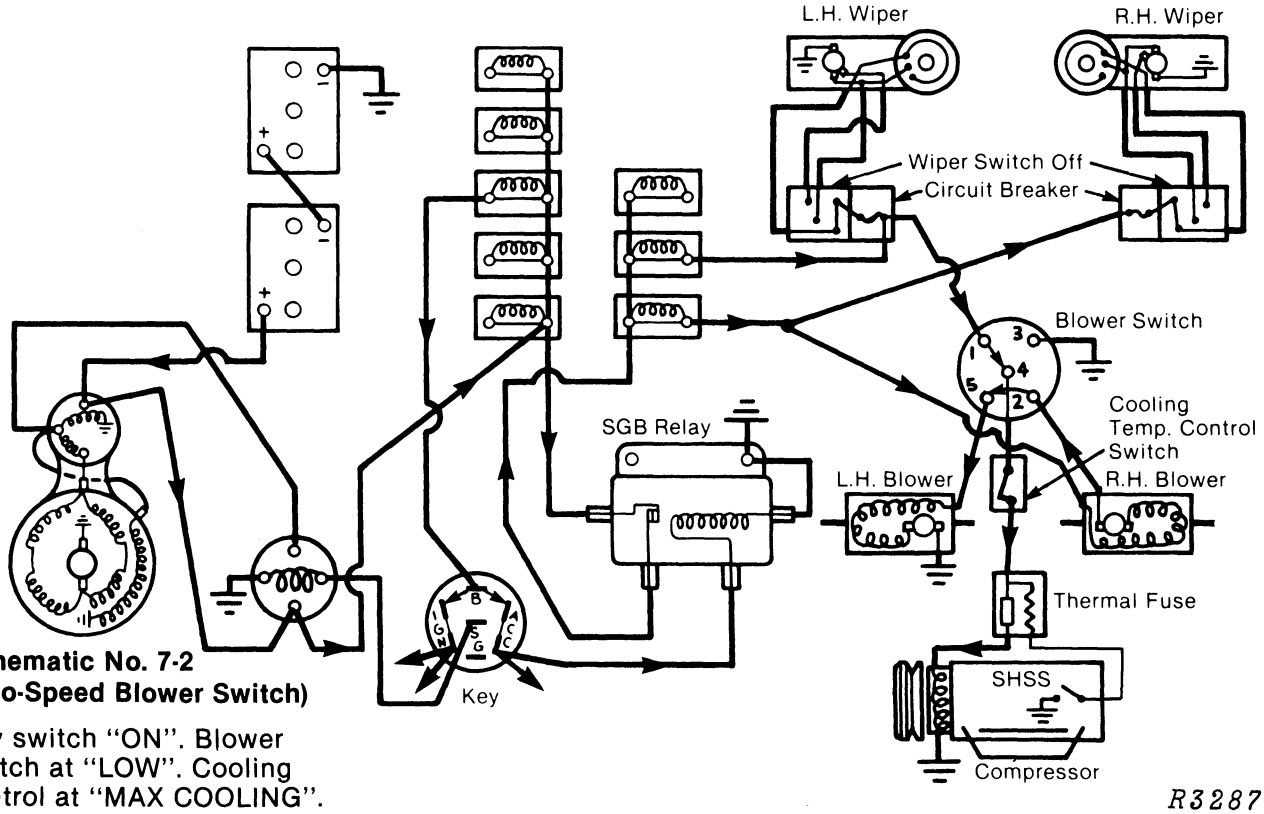

Schematic No. 7-2
(Two-Speed Blower Switch)

Key switch "ON". Blower switch at "LOW". Cooling control at "MAX COOLING".

R32877

7

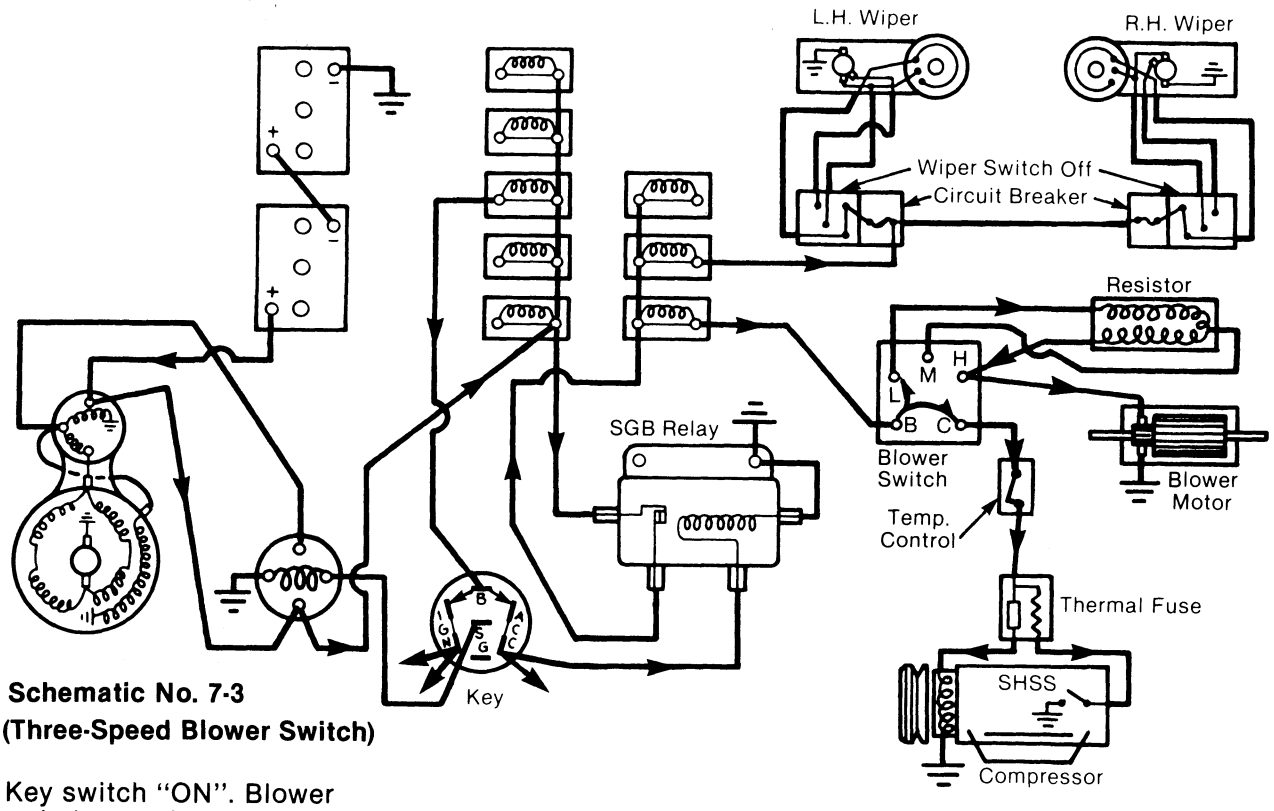

Schematic No. 7-3
(Three-Speed Blower Switch)

Key switch "ON". Blower switch at "LOW". Temp. Control at "MAX. COOLING".

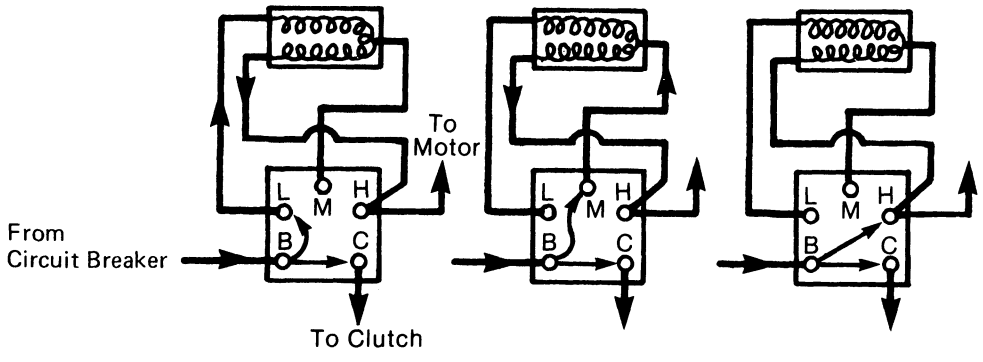

Schematic No. 7-4
(Three-Speed Blower Switch)

R32878

Litho in U.S.A.

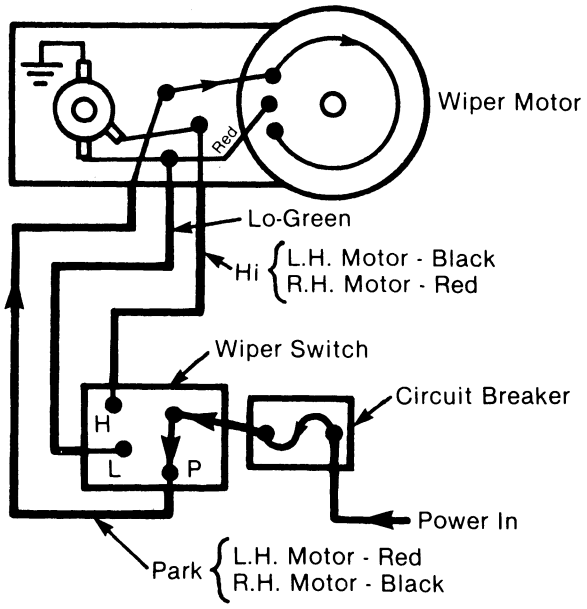

Schematic No. 7-5
Wiper switch at "PARK"

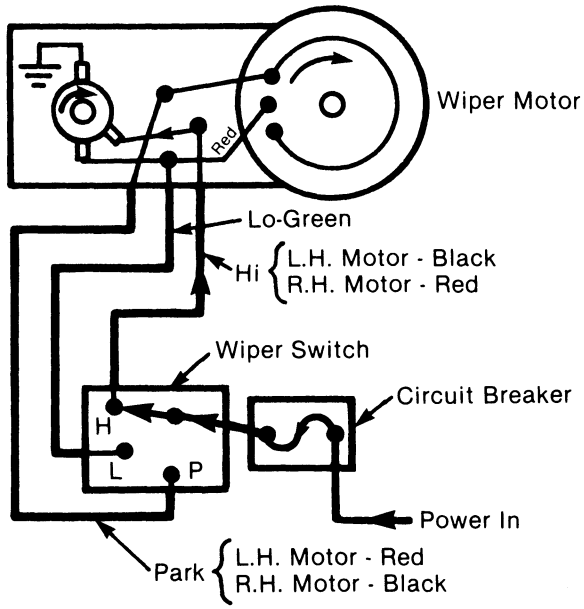

Schematic No. 7-6
Wiper switch at "SLOW"

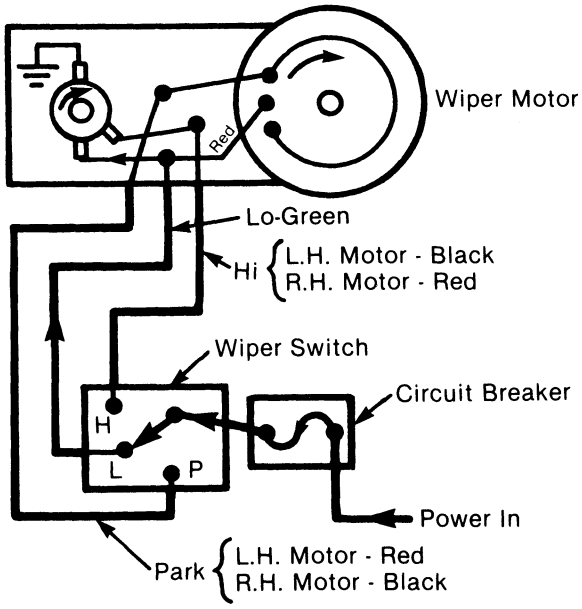

Schematic No. 7-7
Wiper switch at "FAST"

Litho in U.S.A.

8

HORN AND LIGHTER CIRCUIT

Step	*Sequence*	*Result*
A1 **OPERATIONAL CHECK:** Key switch "ON" (early models) Push horn button "IN." 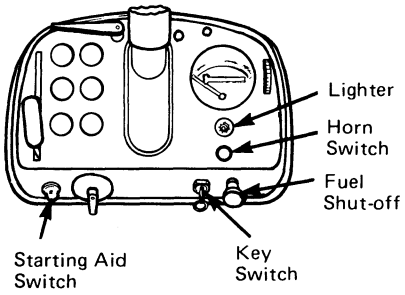	Observe operation of horns.	Horn operation OK: **GO TO A3** Horn operation Not OK: **GO TO A2**
A2 Reference schematic No. 8-1 for isolating malfunction between circuit breaker and horn grounds.		Repair circuit. Then... **GO TO A1**
A3 Push lighter element "IN". 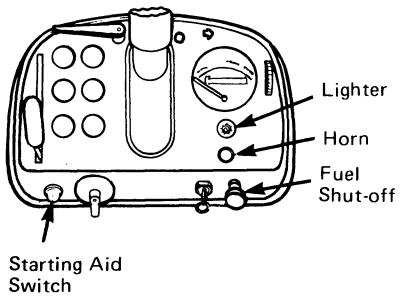	Observe element for heating after 30 seconds. 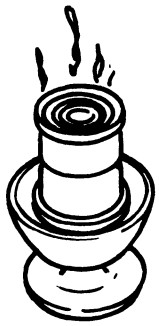	Element heats OK: **GO TO SECTION 2** Element does not heat: **GO TO A4**
A4 Check center terminal of lighter socket for battery voltage. 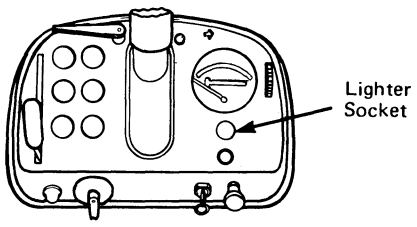		Battery voltage: Replace element. Then... **GO TO A3** Low or no voltage: **GO TO A5**
A5 Reference schematic No. 8-1 for isolating malfunction between horn switch and lighter socket.		Repair circuit. Then... **GO TO A1**

R32880

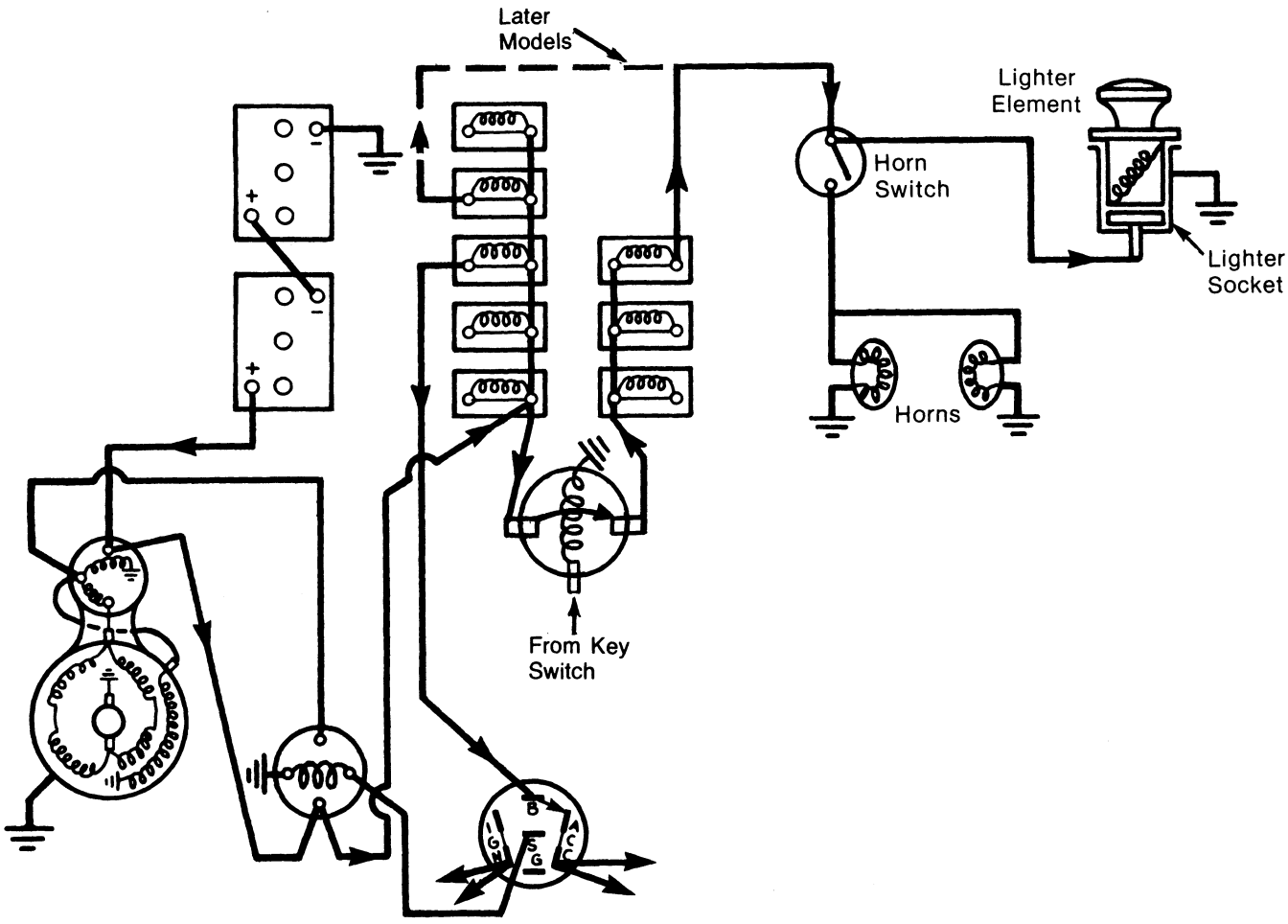

Schematic No. 8-1

Key switch "ON." (early models)

Key switch "OFF." (later models)

Horn and Lighter Circuits

Litho in U.S.A.

RADIO AND TAPE PLAYER CIRCUITS

Step	Sequence	Result
(A1) OPERATIONAL CHECK: Key switch "ON". Tape cartridge "REMOVED" (if equipped with a tape player). Radio switch "ON". Turn tuning knob to a local station (AM then FM if equipped). Observe radio operation from both speakers. Check volume, balance and tone controls. Insert a tape cartridge (if equipped with a tape player). Observe tape player operation from both speakers. Check volume, balance and tone controls.	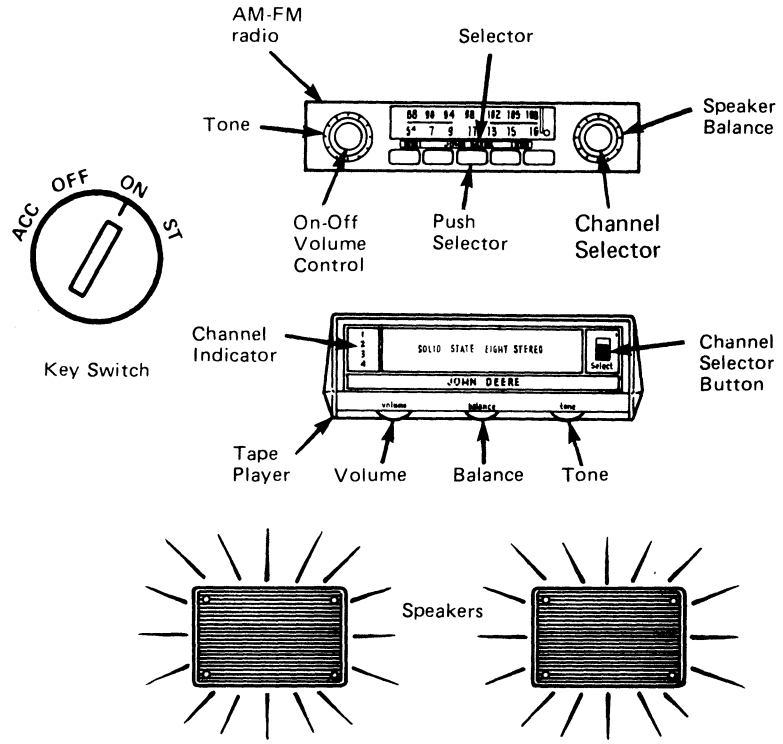	Radio and tape player operation. OK: **GO TO SECTION 2** AM OK, but FM inoperative: Repair radio. Then... **REPEAT A1** FM OK, but AM inoperative: Repair radio. Then... **REPEAT A1** Tape player OK, but radio inoperative: **GO TO B1** Radio and tape player inoperative: **GO TO B4** Radio OK, but tape player inoperative: **GO TO B4** One speaker inoperative: **GO TO B9** Poor reception: **GO TO C1** Excessive static: **GO TO D1**
(B1) PROBLEM: **Tape Player OK, But Radio Inoperative.** Key switch "ON". Radio switch "ON".	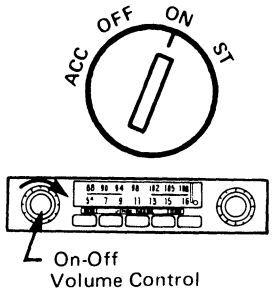 Observe both speakers for humming. 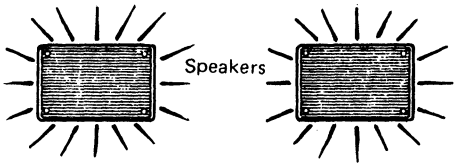	Both speakers humming: **GO TO B2** Speakers not humming: **GO TO B4**

R32882

Step	Sequence	Result
B2 Lower radio assembly. 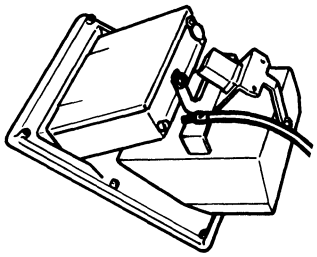	Disconnect antenna cable from radio jack. Check for continuity between center plug and plug shield. 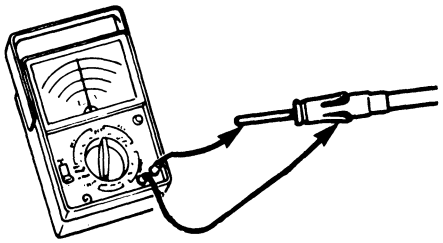	No continuity: OK **GO TO B3** Continuity: Replace antenna. Then... **GO TO A1**
B3 Raise SGB roof panel. Check antenna cable for continuity between the following: 1. Cable center plug and wire at end of cable (a). 2. Plug shield and ground (b). 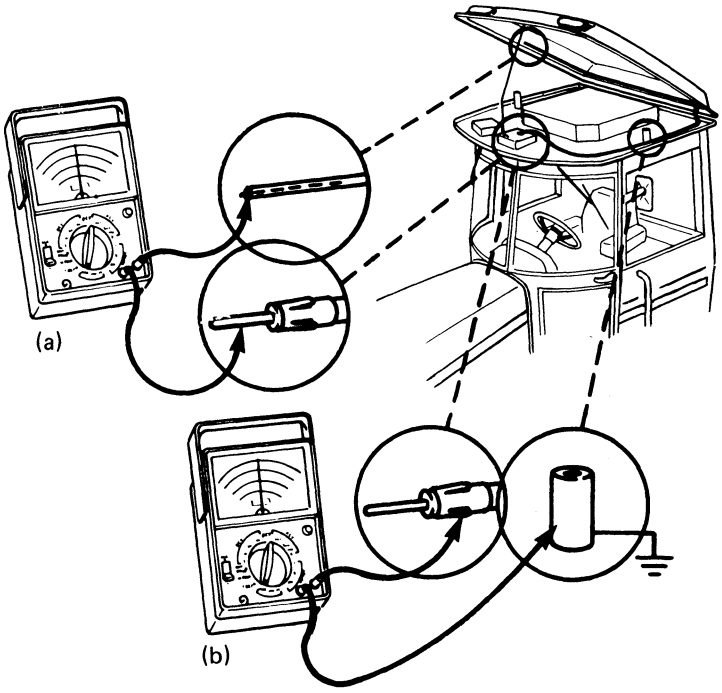		Continuity: OK. Remove radio for repair. After reinstallation... **GO TO A1** No continuity: Replace antenna. Then... **GO TO A1**
B4 Lower radio assembly. Check the following possible causes:		OK: **GO TO B5** Not OK: Repair circuit. Then... **GO TO A1**

	Radio Only	Radio & Tape Player Equipped
1. Power lead connection	X	X
2. 5 amp fuse	X	X
3. Ground lead connection	X	X
4. Speaker coupler connection	X	
5. Tape player coupler connection		X
6. Serviceable radio-tape player relay		X

R32883

9

Step	*Sequence*	*Result*
B5 Key switch "ON". Radio switch "ON". If checking tape player, insert a tape cartridge. 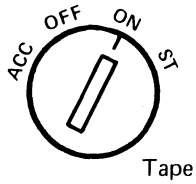 Tape Cartridge Slot 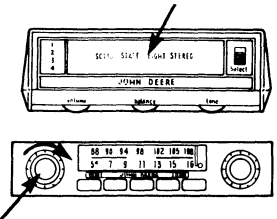 On-Off Volume Control	Check power lead to radio and tape player (if equipped) for battery voltage. Reference schematic: No. 9-1 AM radio only No. 9-2 AM-FM radio No. 9-3 AM/tape player No. 9-4 FM/tape player	Battery voltage:OK: **GO TO B7** Low or no voltage: **GO TO B6**
B6 There is "HIGH RESISTANCE" or an "OPEN" circuit: 1. (radio equipped only) between lighting harness coupler in SGB roof and radio 2. between lighting harness coupler and tape player coupler 3. between tape player coupler and relay 4. at radio-tape player relay 5. between relay and radio		Repair circuit. Then... **GO TO A1**
B7 Key switch "ON". Radio switch "ON". If checking tape player, insert a tape cartridge. 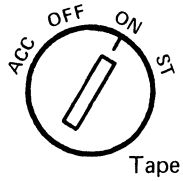 Tape Cartridge Slot 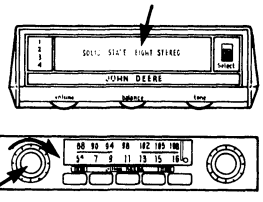 On-Off Volume Control	Check ground lead from radio and tape player (if equipped) for voltage. See schematic: No. 9-1 AM radio only No. 9-2 AM-FM radio No. 9-3 AM/tape player No. 9-4 FM/tape player	No voltage: Good continuity to ground. **GO TO B9** Voltage: **GO TO B8**
B8 There is "HIGH RESISTANCE" or an "OPEN" circuit: 1. (Radio equipped only) between radio and ground 2. between tape player and radio 3. between tape player and relay 4. at radio-tape player relay		Repair circuit. Then... **GO TO A1**

R32884

Step	Sequence	Result
B9 Lower radio assembly. Disconnect 3-wire speaker coupler. 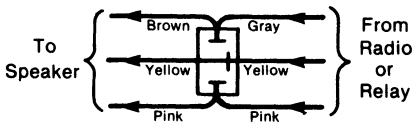	Check brown to yellow and brown to pink terminals for continuity. 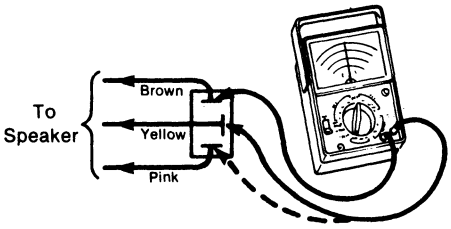	3.0 to 4.0 OHMS: OK: **GO TO B11** Above 4.0 or below 3.0 OHMS: Not OK: **GO TO B10**
B10 Above 4.0 OHMS: there is "HIGH RESISTANCE" or an "OPEN" circuit in speakers or harness: Below 3.0 OHMS: there is a "SHORTED" or "GROUNDED" circuit in speakers or harness:		Repair circuit. Then... **GO TO A1**
B11 **NO TAPE PLAYER: GO TO B12** Check all tape player harness wires for continuity. Reference schematic No. 9-3 (AM radio) or No. 9-4 (AM/FM radio).		OK: **GO TO B12** Not OK: Repair harness. Then... **GO TO A1**
B12 Remove radio or tape player for repair.		After reinstallation... **GO TO A1**
C1 **PROBLEM: POOR RECEPTION** Key switch "ON". Radio switch "ON". Tape cartridge removed (if equipped). Select a weak AM station near 1400 khz. 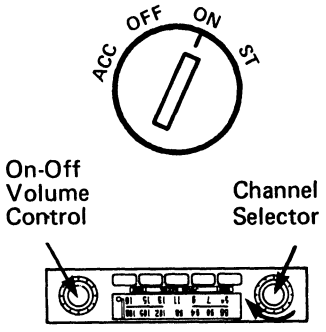 R32885	Remove turning knob. Adjust trimmer antenna capacitor screw in hole below tuning shaft. 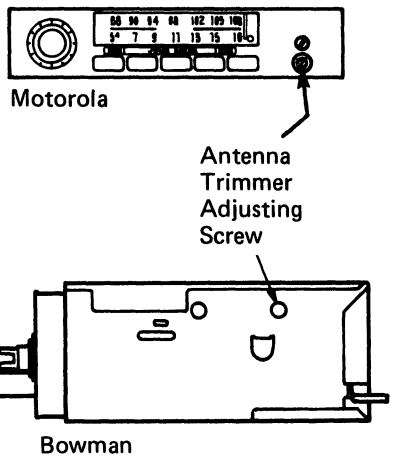 Remove radio to adjust. (RH side view)	Adjustment OK: **GO TO A1** Adjustment Not OK: **GO TO B1**

Step	Result
(D1) **PROBLEM:** **EXCESSIVE STATIC** Follow this sequence to isolate radio static: 1. All electrical switches "OFF" except key switch and radio switch. 2. Turn all switches "ON" one at a time, until radio static is excessive. 3. When static is excessive, study all circuits attached to the last switch turned "ON". 4. Start disconnecting the leads from last switch one at a time to isolate the circuit causing the static. Note: To duplicate radio static, starting the engine or driving the tractor may be necessary. Note: If radio static exists with the key switch "OFF" and battery voltage jumped directly to the radio, replace one or both speakers. Note: Reconnect all leads after testing or repair. Installation of noise suppression kit may be necessary.	Repair faulty circuit as required. **GO TO A1**

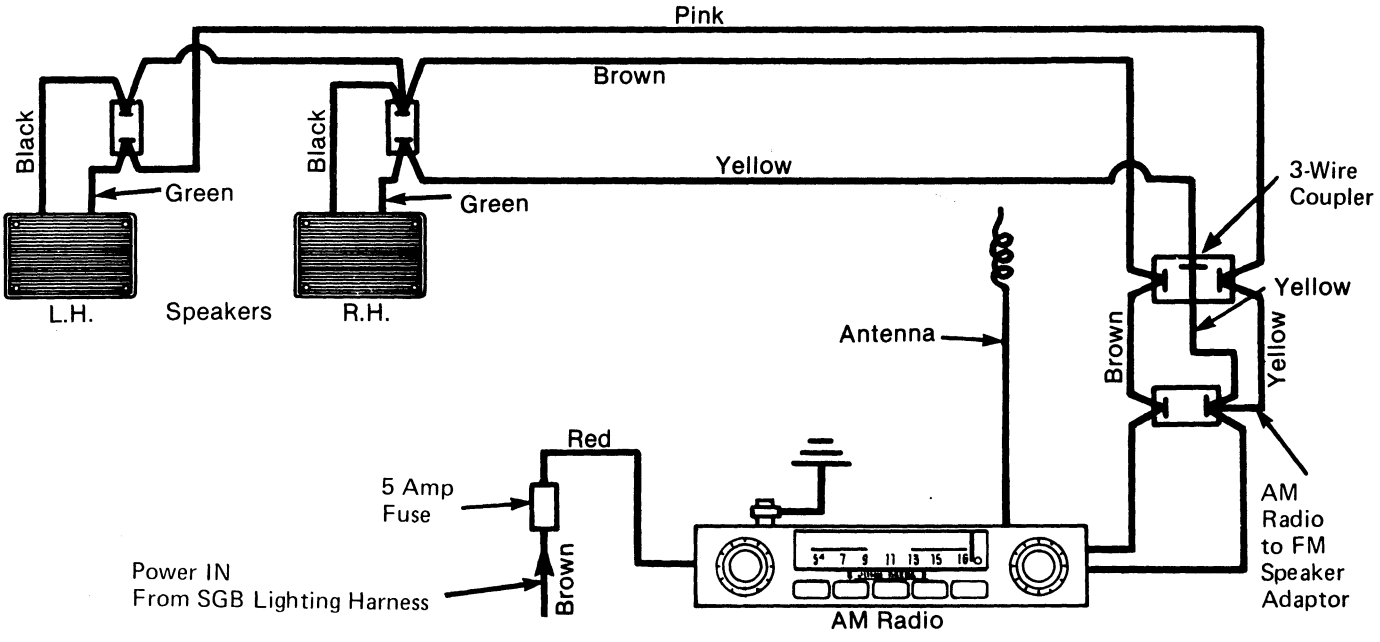

Schematic No. 9-1
AM Radio Without Tape Player

Litho in U.S.A.

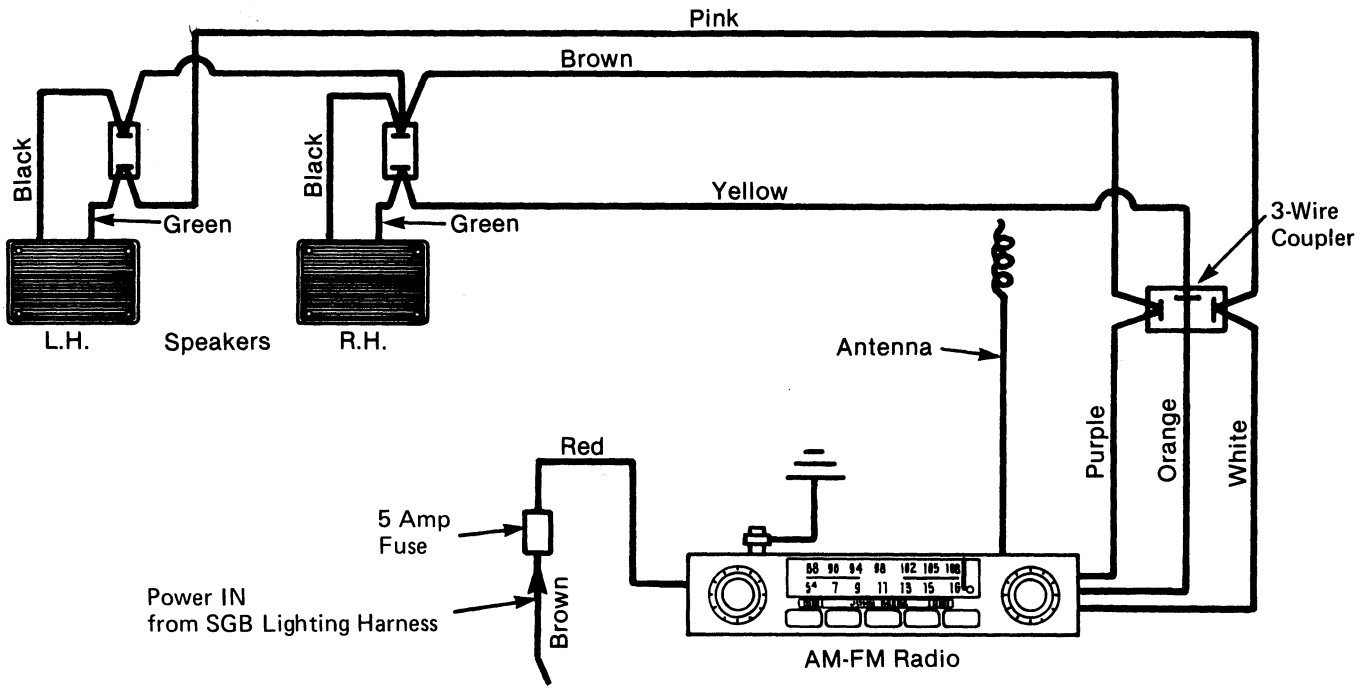

Schematic No. 9-2
AM-FM Radio Without Tape Player

NOTE: Motorola tape player has a 5 amp fuse. Bowman has no fuse

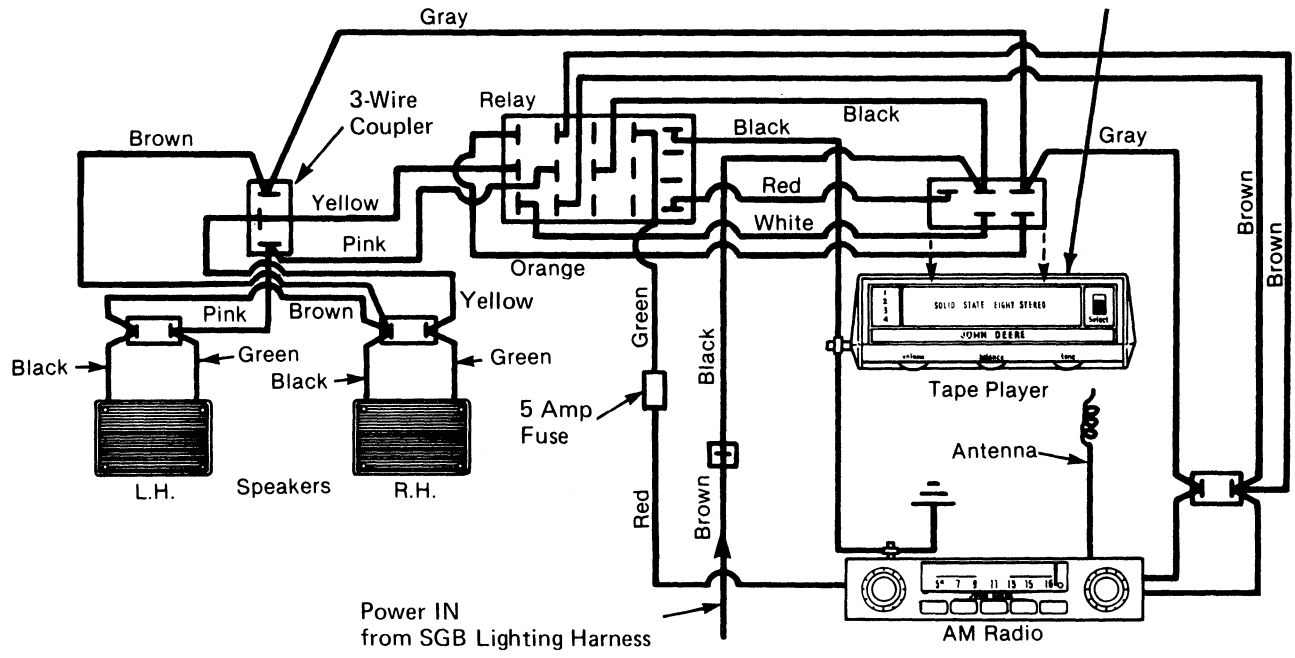

Schematic No. 9-3
AM Radio and Tape Player

R32887

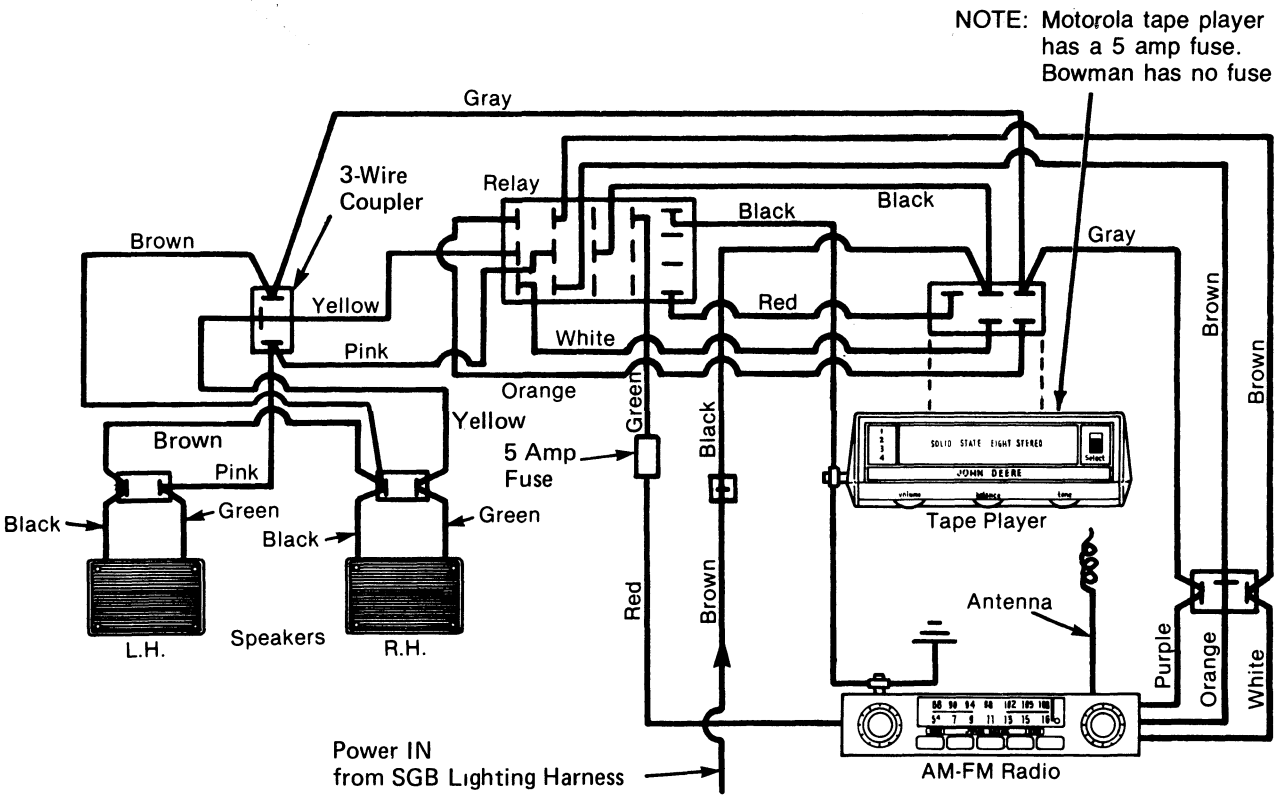

Schematic No. 9-4
AM-FM Radio and Tape Player

R32888

Group 15
DELCOTRON CHARGING CIRCUIT

GENERAL INFORMATION

NOTE: See Group 20 for John Deere charging circuit.

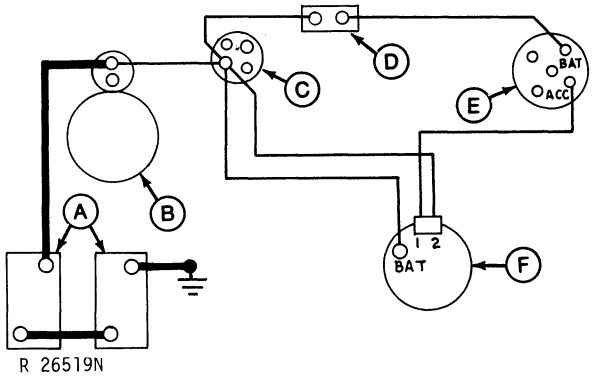

A—Batteries
B—Starter
C—Starter Circuit Relay
D—10-Amp Circuit Breaker
E—Key Switch
F—Alternator

Fig. 1-Charging Circuit

Fig. 1 shows components of charging circuit. Wiring is contained in engine and instrument harnesses.

A 72-amp alternator is used on 8430 and 8630 Tractors.

Regulator is mounted inside alternator. It is solid state, sealed, and non-adjustable.

Alternator does not require any periodic maintenance or lubrication.

HOW THE SYSTEM WORKS

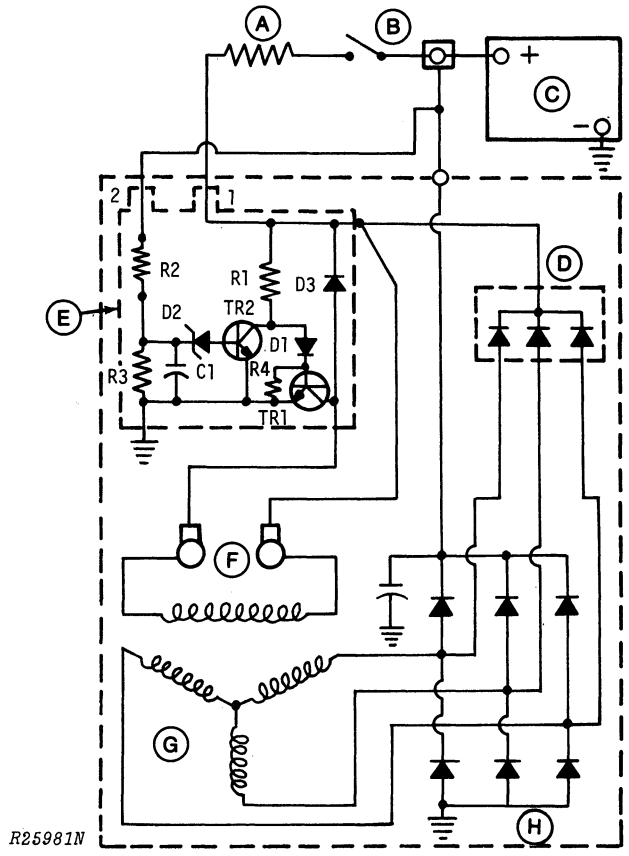

A—Resistance Wire
B—Switch
C—Battery
D—Diode Trio
E—Regulator
F—Rotor (Field)
G—Stator
H—Rectifier Bridge

Fig. 2-Schematic Diagram of Delcotron Alternator

Fig. 2 illustrates circuitry of alternator. Schematic of regulator is simplied somewhat. Regulator actually contains many more components than shown, but performs the same function.

NOTE: Resistance is extremely high in resistor R3, preventing battery run-down. It does allow a constant drain on battery, but drain is insignificantly small—only a few milliamps. Resistors R3 and R4 are needed to provide the voltage differential required to turn transistors on.

OPERATION—Continued

In an alternator (unlike a DC generator) the magnetic field rotates, and windings are stationary.

Magnetic field is externally excited, meaning it requires an outside current source. Rotor consists of two interlocking soft iron sections and a wire coil wrapped around an iron core. When current is passed through wire coil, rotor becomes an electromagnet.

Rotating magnetic field induces alternating current in stator windings. This is converted to direct current by six diodes in rectifier bridge.

A capacitor inside rear housing protects rectifier bridge and diode trio from voltage surges. It also suppresses radio interference.

This alternator uses an "A" field circuit with regulator located after field. Full output is obtained by grounding field.

Solid state regulator is mounted inside alternator. It controls output by controlling current through field. In operation, regulator has the following three phases.

Phase I—Alternator Stopped

(Phase I also applies when alternator is running, but not fast enough for output to exceed battery voltage.)

1. Current flows from battery through key switch and resistance wire to terminal 1.

2. From there, current flows through resistor R1 to transistor TR1 and turns it on.

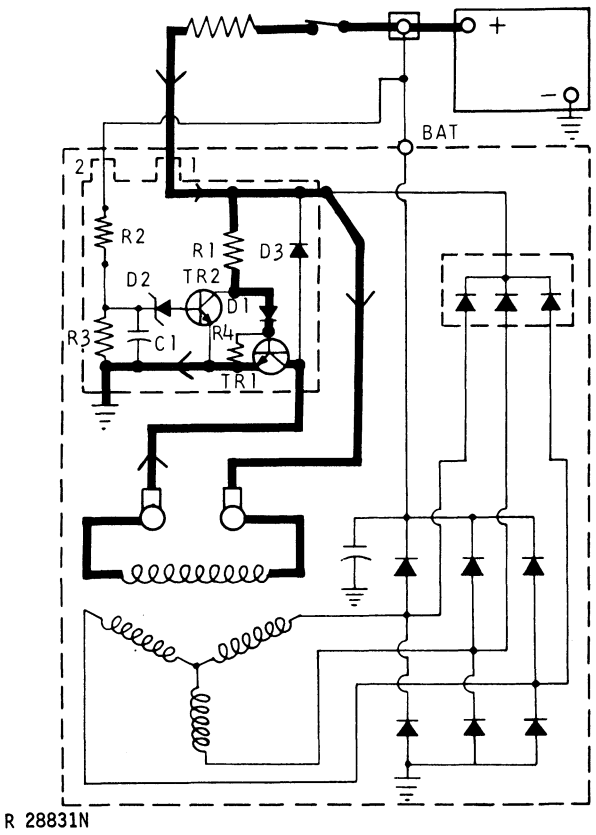

Fig. 3-Regulator in Phase I (Alternator Stopped)

3. Transistor TR1 then provides a path to ground so current can flow through field, enabling alternator to generate electricity.

4. Zener diode D2 prevents flow of current from terminal 2 to transistor TR2. A zener diode is a special type of diode which will not permit current to pass until voltage reaches a certain preset level. If voltage exceeds that level, current can pass through the zener diode.

Phase II—Generating Electricity

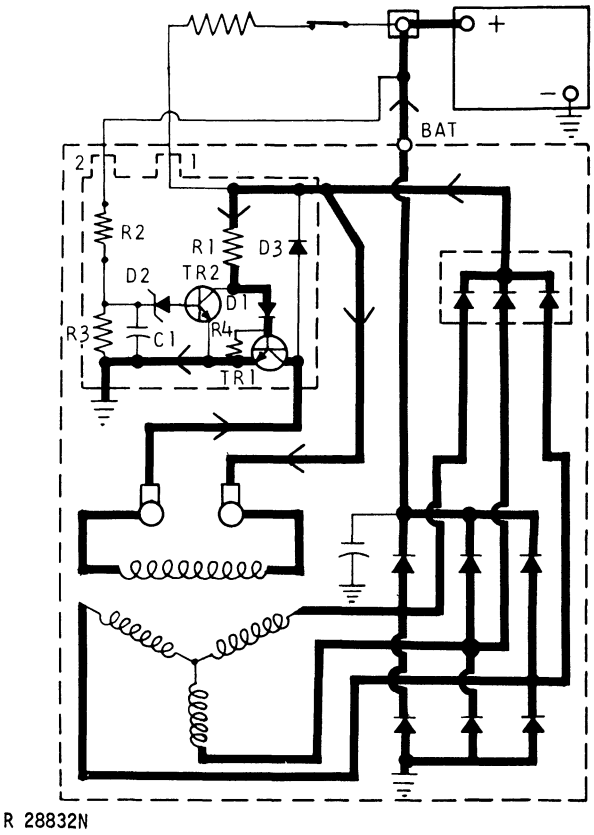

Fig. 4-Regulator in Phase II (Generating Electricity)

1. Diode trio, key switch, rectifier bridge, and terminal 1 all have equal voltage. Therefore no current flows through resistance wire.

2. Current, now coming from diode trio, still flows through resistor R1 to turn on transistor TR1.

3. Transistor TR1 still provides a path to ground so current can flow through field, enabling alternator to generate electricity.

4. Since field is rotating, it does indeed generate electricity. Alternating current is induced in stator windings. Rectifier bridge converts it to direct current, providing current to run electrical accessories and charge batteries.

5. Output voltage still has not reached critical voltage of zener diode D2, so no current can flow from terminal 2 to transistor TR2.

Phase III—Shut-Off

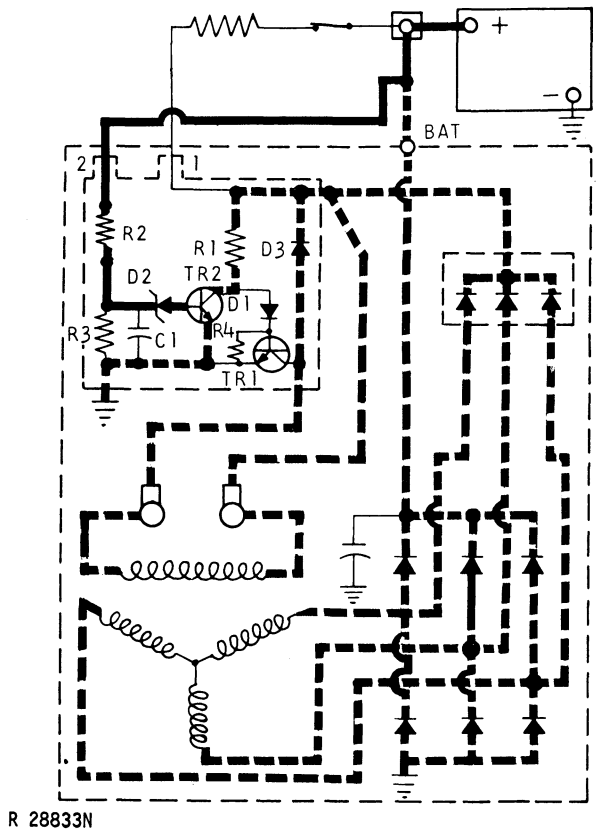

Fig. 5-Regulator in Phase III (Shut-Off)

1. Output voltage reaches critical voltage of zener diode D2.

2. Current can now pass through zener diode D2 to turn on transistor TR2.

3. Transistor TR2 now provides a direct path to ground for any current coming through resistor R1.

4. This cuts off the current to transistor TR1, turning it off. There is now no path to ground for current through field.

5. Current through field is shut off instantly, and alternator stops generating electricity.

6. Phases II and III are repeated many times per second to maintain voltage at proper level.

PRECAUTIONS

When working on charging circuit, observe the following rules for your safety and prevention of damage to tractor:

Safety

1. Keep all sparks and flames away from batteries. Gas from battery electrolyte is highly flammable. Also avoid spilling electrolyte on yourself or on anything which could be damaged by the sulphuric acid.

2. Avoid sparks when connecting booster batteries or battery chargers. When possible, make last connection at a point away from batteries. Battery charger should be turned off before connecting or disconnecting.

3. When connecting batteries, always connect ground cable last. Disconnect it first.

4. When possible, disconnect battery ground cable before working on electrical system.

5. Before running engine of a tractor with power front-wheel drive, shut off main hydraulic pump, disconnect three-terminal connector near solenoids, or raise both front wheels. This is to prevent tractor movement if drive is accidentally engaged.

Prevention of Damage

1. Before connecting battery cables, be sure that battery and alternator connections are correct. Reverse polarity can cause permanent damage.

2. When connecting a booster battery, connect positive terminal of booster battery to positive terminal of left-hand battery. Then connect negative terminal of booster battery to tractor frame. Reverse polarity can cause permanent damage.

3. Never run engine with alternator or battery cables disconnected. Doing so might damage alternator or regulator.

4. Never short across or ground alternator terminals unless specifically recommended. Be careful to prevent grounding alternator wires when disconnected.

5. Never attempt to polarize an alternator.

6. Before using an electric welder on tractor, disconnect battery ground cable. Connect welder ground clamp as near as possible to the area being welded, and be sure it makes good electrical contact.

DIAGNOSIS AND TESTS

Refer to Group 10 for diagnosis and test procedures.

REMOVAL

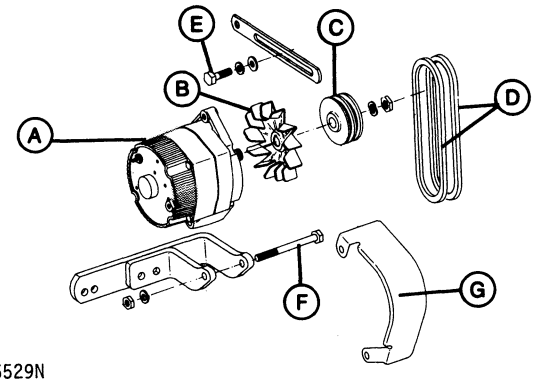

R 26529N

A—Alternator
B—Fan
C—Pulley
D—Drive Belts
E—Adjusting Cap Screw
F—Mounting Bolt
G—Shield

Fig. 6-Alternator Removal

To remove alternator, remove adjusting cap screw (E) and mounting bolt (F). Leave shield (G) with mounting hardware.

DISASSEMBLY

NOTE: Pulley nut need not be removed if you are certain that front bearing is in good condition. Just separate housing as described below, and leave rotor installed in front housing.

JD306-A Alternator Pulley Nut Tool is recommended for removing and installing pulley nut. Install a 15/16-inch socket on JD-306A-1 to hold nut. Install JD-306A-2 on hex shaft of JD-306A-1 to hold rotor shaft. Hold rotor and remove nut.

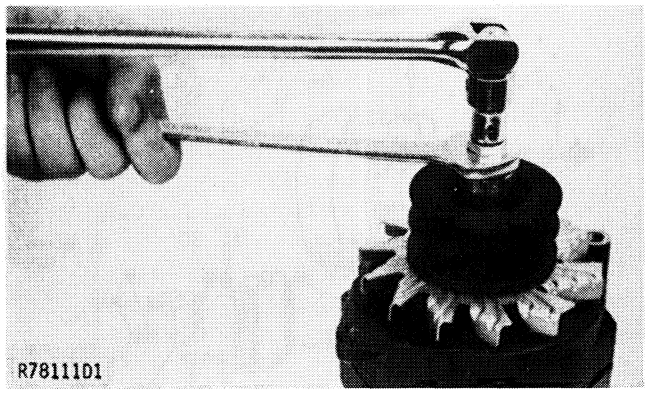

Fig. 7-Removing Alternator Pulley Nut

NOTE: If pulley nut remover is not available, wrap a discarded, oversize V-belt around pulley. Carefully hold pulley in vise, and remove pulley nut. If pulley slips on shaft, separate housing as instructed below. Carefully hold rotor in vise, and remove pulley nut.

1. Remove pulley, fan, and collar.

2. Before separating housing, chalk a mark across one side for reference when reassembling. Front and rear housings can fit together any of four ways.

3. Remove four thru bolts (1, Fig. 8), and separate front and rear housings. If necessary, pry carefully with two screwdrivers on opposite sides to force housings apart.

4. Set alternator on rear housing, and slide front housing off. Lift rotor out of rear housing.

5. Place a piece of masking tape over rear bearing to keep trash out.

6. Remove other components only as necessary.

REPAIR

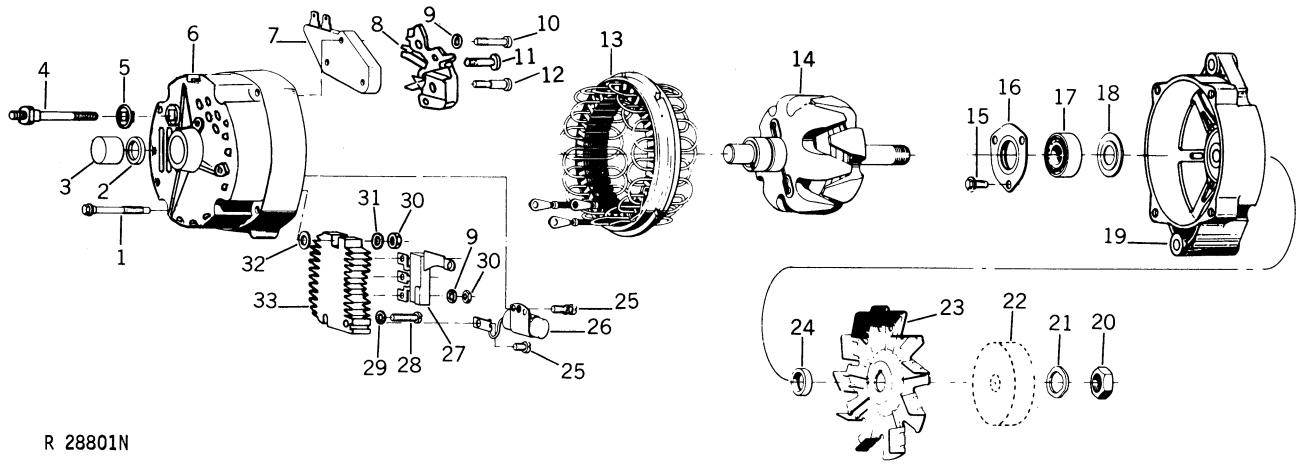

1—Thru Bolt (4 used)
2—Oil Seal
3—Rear Bearing
4—Output Terminal
5—Insulating Washer
6—Rear Housing
7—Regulator
8—Brush Assembly
9—Lock Washer (4 used)
10—Regulator Ground Screw
11—Insulated Pivot Screw
12—Insulated Screw (2 used)
13—Stator
14—Rotor
15—Screw (3 used)
16—Bearing Retainer
17—Front Bearing
18—Slinger Washer
19—Front Housing
20—Pulley Nut
21—Lock Washer
22—Pulley
23—Fan
24—Outer Collar
25—Screw (2 used)
26—Capacitor
27—Diode Trio
28—Rectifier Ground Screw
29—Lock Washer
30—Nut (4 used)
31—Washer
32—Insulating Washer
33—Rectifier Bridge

Fig. 8-Alternator

Front Bearing

Remove bearing retainer (16, Fig. 8) by removing three screws (15). Remove bearing (17) and slinger washer (18).

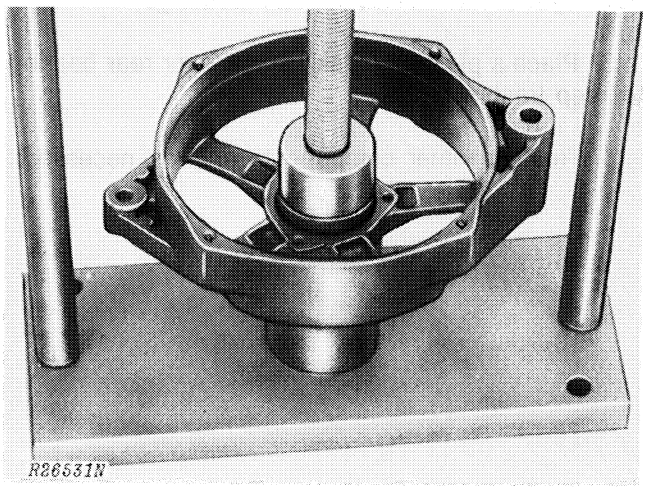

Fig. 9-Pressing Front Bearing

NOTE: If necessary to press bearing out of or into housing, carefully support housing near bearing diameter, as shown in Fig. 9.A 1-3/4 inch socket makes a suitable support.

Bearing may be reused if not damaged. Clean bearing and fill it 1/4 full with Delco-Remy Lubricant No. 1948791 before assembly. Do not overfill.

Reinstall slinger washer and bearing.

Install new bearing retainer if felt seal is hardened or worn. Fill cavity between retainer plate and bearing with 1948791 Lubricant.

Rear Bearing

Replace rear bearing if defective or if its grease supply is exhausted. Do not attempt to relubricate.

Support housing near bearing diameter (A 1-1/4 inch socket makes a suitable support) and press bearing to inside. Press new bearing in until flush.

Install new seal with lip toward rotor. Coat seal lip with oil for easier assembly.

Rotor

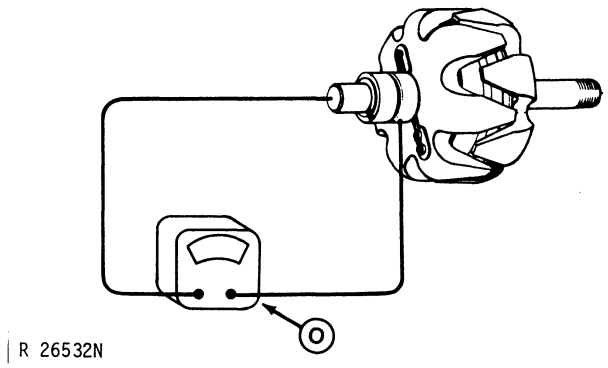

O—Ohmmeter

Fig. 10-Checking Rotor for Grounds

To check rotor for grounds, use an ohmmeter or test lamp to test for continuity between each slip ring and rotor shaft. Replace rotor if test shows continuity.

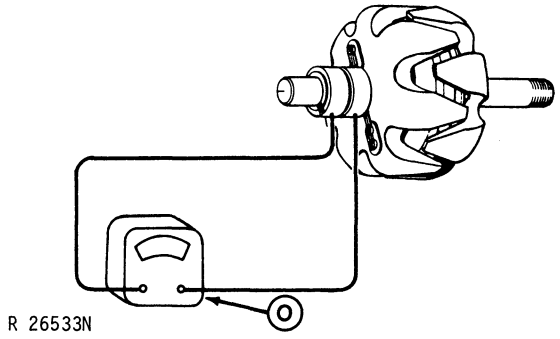

O—Ohmmeter

Fig. 11-Checking Rotor for Open Circuit

To check rotor for open circuit, use an ohmmeter or test lamp to test for continuity from one slip ring to the other. Replace rotor if test does not show continuity.

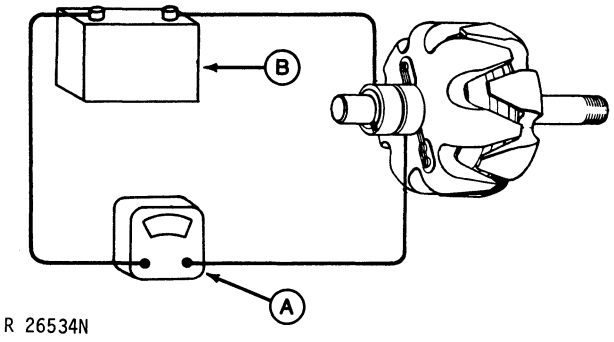

A—Ammeter **B—Battery**

Fig. 12-Checking Rotor for Short Circuit

To check rotor for short circuit, connect one slip ring to one terminal of 12-volt test battery. Connect ammeter to other slip ring and other terminal of test battery.

Current draw should be 4.0 to 4.5 amps at 12 volts. Excessive current draw indicates a short circuit. Replace rotor if current draw exceeds 5 amps.

Rough or out-of-round slip rings result in short brush life. If slip rings are defective, mount rotor on lathe. If rings are scored, turn them just enough to eliminate roughness. If rings are out-of-round, turn them to within 0.002 inch (0.05 mm) total indicator reading.

Polish slip rings sparingly with number 00 sandpaper or 400-grit silicon carbide paper.

IMPORTANT: Clean rotor and stator with compressed air only. Cleaning solvent would damage insulation.

Stator

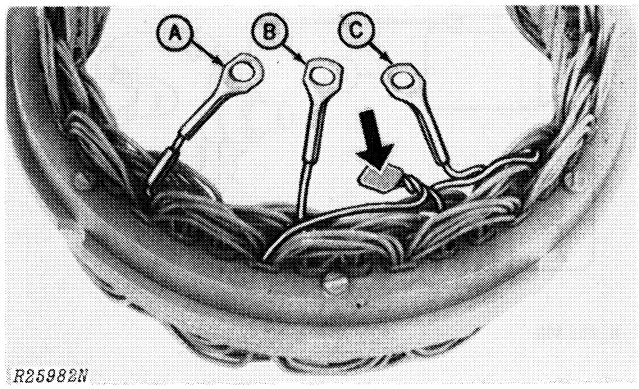

Fig. 13-"Y" Connected Stator

Stator windings for 61-amp alternator are "Y"connected. Other ends of wires A, B, and C form a common junction.

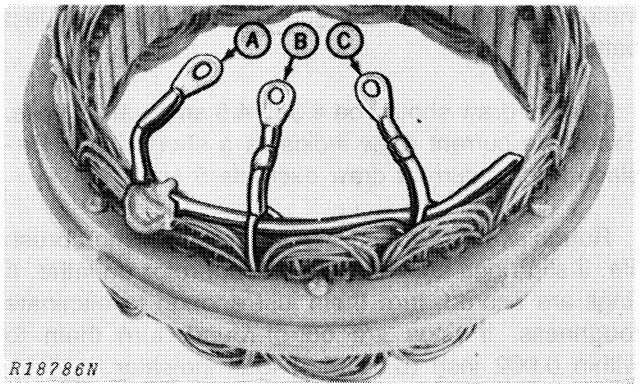

Fig. 14-"Delta" Connected Stator

Stator windings for 72-amp alternator are "delta" connected. Each terminal is connected to two windings, like the three points of a triangle.

Inspect stator for defective insulation. Check for discoloration or a burned smell which would indicate a short circuit. Replace stator if you find any defect.

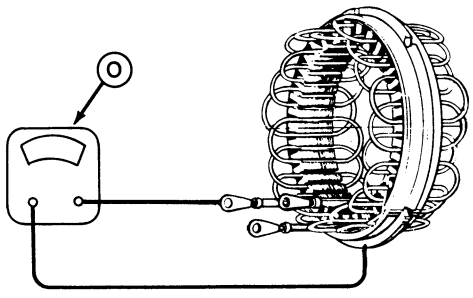

R 26536N

O—Ohmmeter

Fig. 15-Checking Stator for Grounds

To check stator for grounds, use an ohmmeter or test lamp to test for continuity between each stator lead and stator frame. Replace stator if test shows continuity.

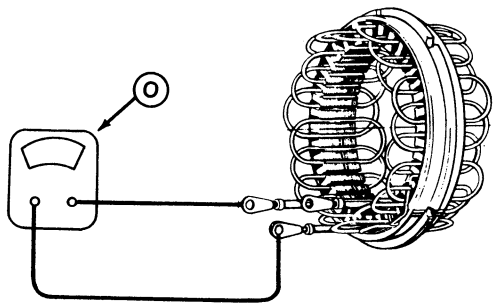

R 26537N

O—Ohmmeter

Fig. 16-Checking Stator for Open Circuit

NOTE: A 72-amp stator cannot be tested for an open circuit without disconnecting terminals from stator windings.

A short-circuited stator can be very difficult to identify. If an ohmmeter sensitive to resistances of 0 to 1 ohm is available, repeat the tests for open circuit.

Resistance between each pair of terminals should be approximately 0.1 ohms for 72-amp stator or 0.2 ohms for 61-amp stator. Ohmmeter needle should deflect to zero if leads are touched together. If resistance is low, windings are short-circuited and must be replaced.

A stator will occasionally exhibit an open circuit or short circuit only when hot, making the defect even more difficult to diagnose.

If you suspect, but cannot confirm, that stator is defective, double check all other components. If problem cannot be found elsewhere, replace stator.

IMPORTANT: Clean stator and rotor with compressed air only. Cleaning solvent would damage insulation.

Brush Assembly

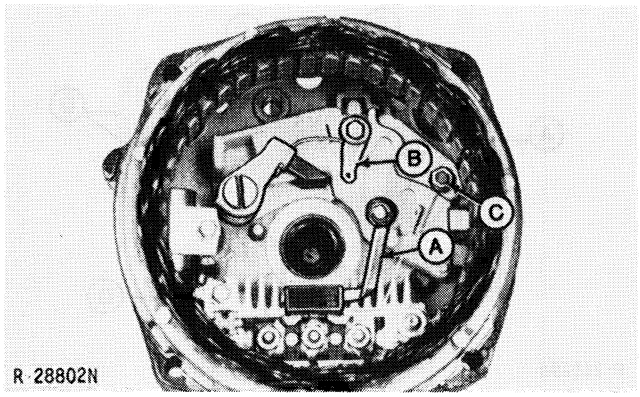

A—Brush Contact from Diode Trio
B—Brush Contact from Regulator
C—Regulator Ground Screw

Fig. 17-Checking Brushes for Grounds

A grounded brush assembly results in either no output or uncontrolled output, depending on where the ground is located.

Check insulating washers on screws holding both brush leads (A and B, Fig. 17). Replace if necessary. If circuit is grounded elsewhere, replace regulator.

A grounded brush assembly may also damage the diode trio. Before assembling alternator, check diode trio as instructed at right.

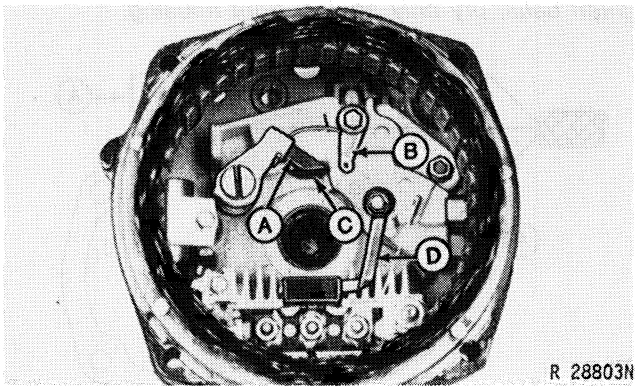

Fig. 18-Checking Brushes for Open Circuit

Use an ohmmeter or test lamp to test for continuity between points A and B, Fig. 18. Also check between points C and D. Replace brush assembly if either check does not show continuity.

Diode Trio

To check the diode trio, first remove the stator, then remove the attaching screw and the diode trio, noting the insulator positions.

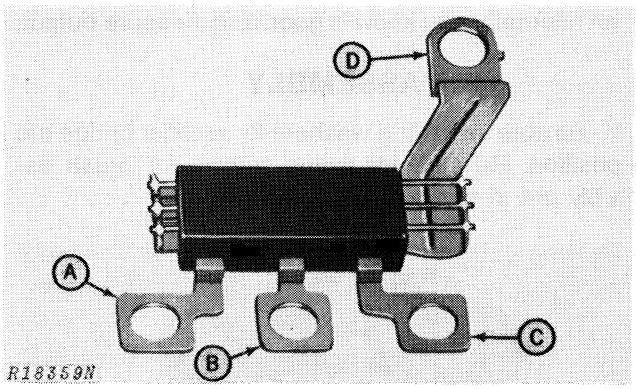

Fig. 19-Checking Diode Trio

Use an ohmmeter or test lamp to test for continuity between points A and D, Fig. 19. Then reverse leads and test for continuity between same points in opposite direction. A good diode trio will have continuity in one direction only.

Repeat tests between points B and D and between points C and D. Replace diode trio unless tests show continuity in only one direction in each case.

Rectifier Bridge

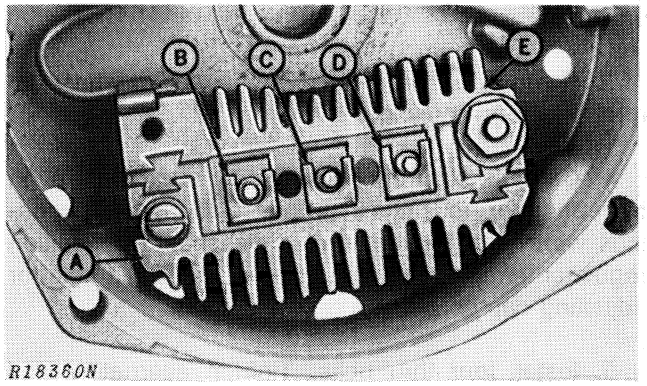

Fig. 20-Rectifier Bridge

Rectifier bridge has a grounded heat sink (A, Fig. 20) and an insulated heat sink (E).

Use an ohmmeter or test lamp to test for continuity between points A and B. Then reverse leads to test for continuity between same two points in opposite direction. A good rectifier bridge will have continuity in one direction only.

Repeat tests between points A and C, A and D, B and E, C and E, and D and E. Replace rectifier bridge unless tests show continuity in only one direction in each case.

Regulator

Regulator cannot be tested satisfactorily. Replace regulator if indicated by tests in Group 10.

The only suitable way to test regulator is to install it on an alternator you know is good and measure output.

ASSEMBLY

1. Be sure insulating washers for rectifier bridge are in position. Be sure insulating screws for brush assembly are in position.

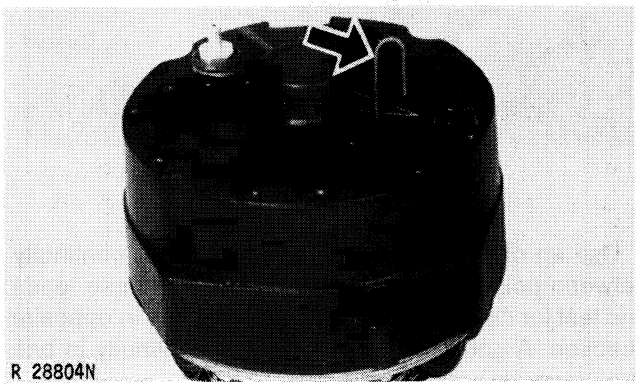

Fig. 21-Blocking Brushes in Position with Wire

2. Push brushes back to clear slip rings. Block brushes in position by inserting a wire through hole in rear housing. Insert wire only far enough to hold brushes.

3. Remove tape from rear bearing, and carefully slip rotor into rear housing.

4. Carefully slip front housing over rotor shaft. Align front and rear housings in proper relationship. If housings were not marked during disassembly, position regulator terminals on same side as threaded hole for adjusting cap screw.

5. Install four thru bolts. Tighten alternately and securely.

6. Remove wire from hole in rear housing.

7. Install collar, fan, pulley, washer, and pulley nut. Tighten pulley nut to 60 ft-lbs (80 Nm) (8 kgm), using JD-306 Alternator Pulley Nut Remover as shown in Fig. 7.

INSTALLATION

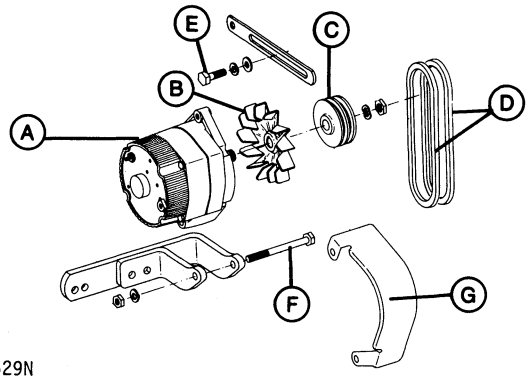

A—Alternator
B—Fan
C—Pulley
D—Drive Belts
E—Adjusting Cap Screw
F—Mounting Bolt
G—Shield

Fig. 22-Alternator Installation

1. Hold alternator (A, Fig. 22) and pulley shield (G) in position, and install mounting bolt (F) through lower holes.
2. Loosely install adjusting cap screw (E) through lock washer, washer, adjusting strap, and pulley shield into front housing.
3. Make sure belts are in good condition, and use a reliable belt tension gauge to adjust tension. Tighten new belts to 100 pounds (445 N) tension. If belts have been run, tighten to 90 pounds (400 N) tension. Adjust tension only when belts are cool.

NOTE: If necessary to pry against alternator to tighten belts, pry only against front housing.

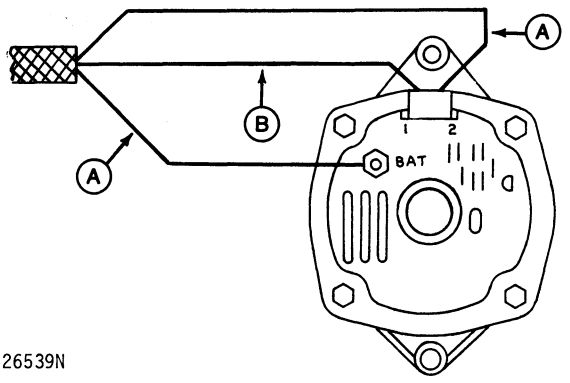

A—Red **B—Resistance Wire**

Fig. 23-Alternator Connections

4. Attach wires as shown in Fig. 23. (Terminal behind Terminal 2 is not used.) Attach battery ground cable.

IMPORTANT: Never attempt to polarize an alternator.

Group 20
JOHN DEERE CHARGING CIRCUIT

GENERAL INFORMATION

NOTE: See Group 15 for Delcotron Charging Circuit.

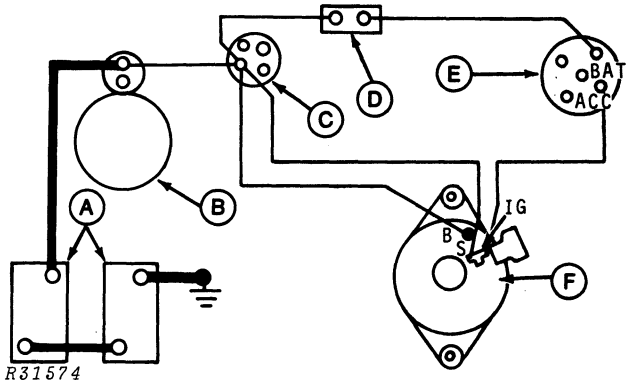

A—Batteries
B—Starter
C—Starter Circuit Relay
D—10-Amp Circuit Breaker
E—Key Switch
F—Alternator

Fig. 1-Charging Circuit

Fig. 1 shows components of charging circuit. Wiring is contained in engine and instrument harnesses.

Alternator output rating is 90 amps.

Regulator is mounted on alternator. It is solid state, sealed, and non-adjustable.

Alternator does not require any periodic maintenance or lubrication.

HOW THE SYSTEM WORKS

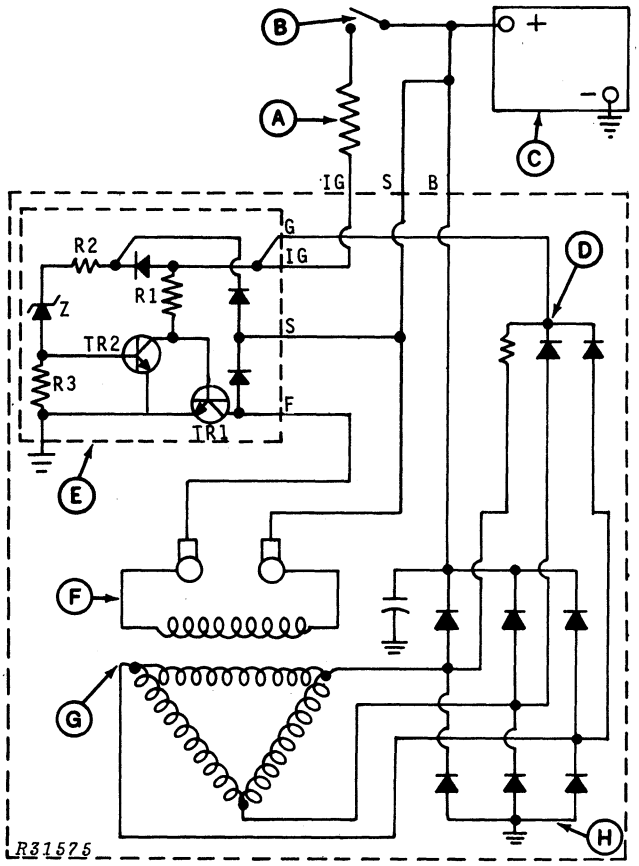

A—Resistance Wire
B—Switch
C—Battery
D—Diode/Resistor Trio
E—Regulator
F—Rotor (Field)
G—Stator
H—Rectifier Bridge

Fig. 2-Schematic Diagram of John Deere Alternator

Fig. 2 illustrates circuitry of alternator. Schematic of regulator is simplied somewhat. Regulator actually contains more components than shown, but performs the same function.

OPERATION—Continued

In an alternator (unlike a DC generator) the magnetic field rotates, and windings are stationary.

Magnetic field is externally excited, meaning it requires an outside current source. Rotor consists of two interlocking soft iron sections and a wire coil wrapped around an iron core. When current is passed through wire coil, rotor becomes an electromagnet.

Rotating magnetic field induces alternating current in stator windings. This is converted to direct current by six diodes in rectifier bridge.

A capacitor on rear housing protects rectifier bridge and diode trio from voltage surges. It also suppresses radio interference.

This alternator uses an "A" field circuit with regulator located after field. Full output is obtained by grounding field.

Solid state regulator is mounted on alternator. It controls output by controlling current through field. In operation, regulator has the following three phases.

Phase I—Alternator Stopped

(Phase I also applies when alternator is running, but not fast enough for output to exceed battery voltage.)

1. Current flows from battery through key switch and resistance wire to terminal 1.

2. From there, current flows through resistor R1 to transistor TR1 and turns it on.

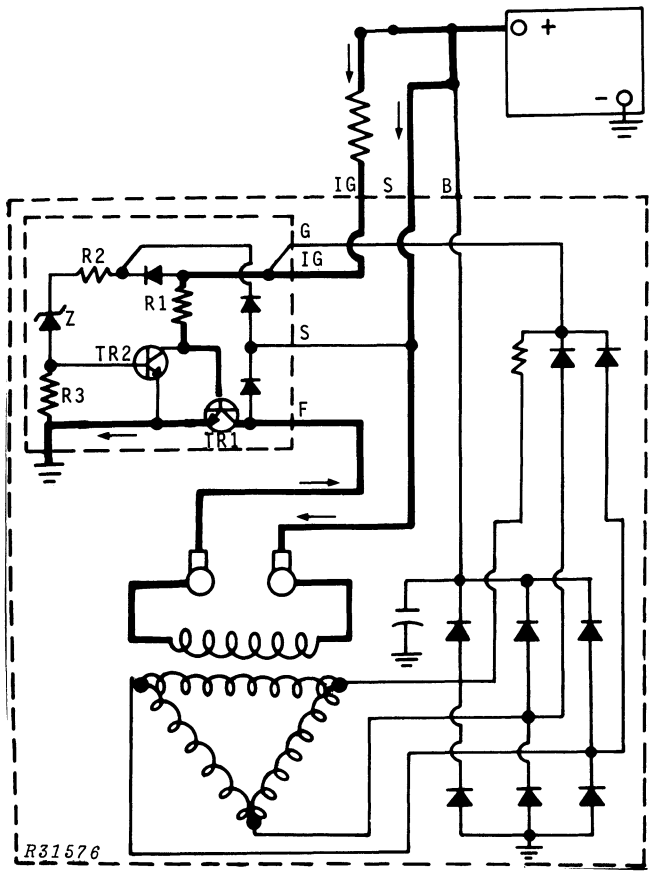

Fig. 3-Regulator in Phase I (Alternator Stopped)

3. Transistor TR1 then provides a path to ground so current can flow through field, enabling alternator to generate electricity.

4. Zener diode Z prevents flow of current from terminal 2 to transistor TR2. A zener diode is a special type of diode which will not permit current to pass until voltage reaches a certain preset level. If voltage exceeds that level, current can pass through the zener diode.

Phase II—Generating Electricity

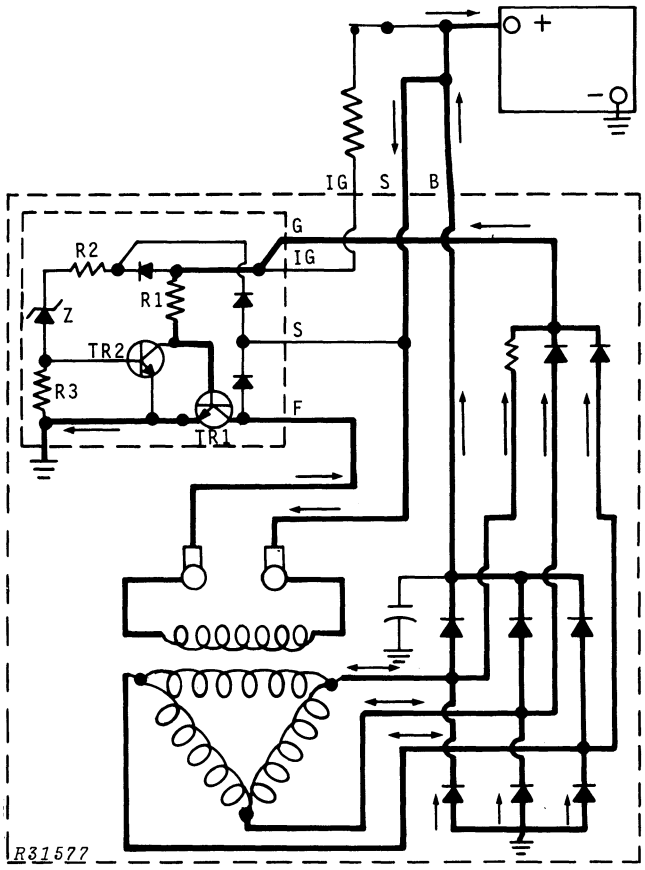

Fig. 4-Regulator in Phase II (Generating Electricity)

1. Diode/rectifier trio, key switch, rectifier bridge, and terminal 1 all have equal voltage. Therefore no current flows through resistance wire.

2. Current, now coming from diode/resistor trio, still flows through resistor R1 to turn on transistor TR1.

3. Transistor TR1 still provides a path to ground so current can flow through field, enabling alternator to generate electricity.

4. Since field is rotating, it does indeed generate electricity. Alternating current is induced in stator windings. Rectifier bridge converts it to direct current, providing current to run electrical accessories and charge batteries.

5. Output voltage still has not reached critical voltage of zener diode Z, so no current can flow from terminal 2 to transistor TR2.

Phase III—Shut-Off

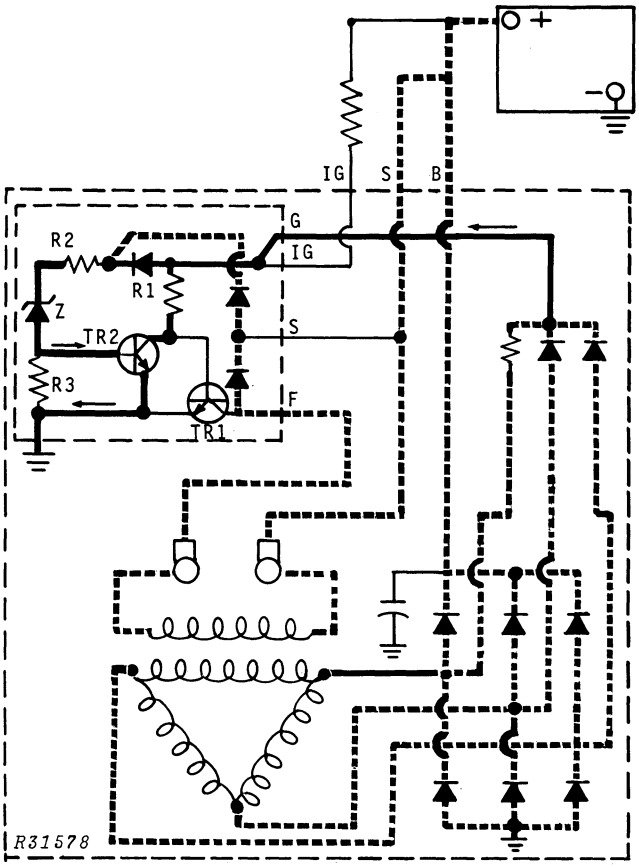

Fig. 5-Regulator in Phase III (Shut-Off)

1. Output voltage reaches critical voltage of zener diode Z.

2. Current can now pass through zener diode Z to turn on transistor TR2.

3. Transistor TR2 now provides a direct path to ground for any current coming through resistor R1.

4. This cuts off the current to transistor TR1, turning it off. There is now no path to ground for current through field.

5. Current through field is shut off instantly, and alternator stops generating electricity.

6. Phases II and III are repeated many times per second to maintain voltage at proper level.

PRECAUTIONS

When working on charging circuit, observe the following rules for your safety and prevention of damage to tractor:

Safety

1. Keep all sparks and flames away from batteries. Gas from battery electrolyte is highly flammable. Also avoid spilling electrolyte on yourself or on anything which could be damaged by the sulphuric acid.

2. Avoid sparks when connecting booster batteries or battery chargers. When possible, make last connection at a point away from batteries. Battery charger should be turned off before connecting or disconnecting.

3. When connecting batteries, always connect ground cable last. Disconnect it first.

4. When possible, disconnect battery ground cable before working on electrical system.

5. Before running engine of a tractor with power front-wheel drive, shut off main hydraulic pump, disconnect three-terminal connector near solenoids, or raise both front wheels. This is to prevent tractor movement if drive is accidentally engaged.

Prevention of Damage

1. Before connecting battery cables, be sure that battery and alternator connections are correct. Reverse polarity can cause permanent damage.

2. When connecting a booster battery, connect positive terminal of booster battery to positive terminal of left-hand battery. Then connect negative terminal of booster battery to tractor frame. Reverse polarity can cause permanent damage.

3. Never run engine with alternator or battery cables disconnected. Doing so might damage alternator or regulator.

4. Never short across or ground alternator terminals unless specifically recommended. Be careful to prevent grounding alternator wires when disconnected.

5. Never attempt to polarize an alternator.

6. Before using an electric welder on tractor, disconnect battery ground cable. Connect welder ground clamp as near as possible to the area being welded, and be sure it makes good electrical contact.

DIAGNOSIS AND TESTS

Refer to Group 10 for diagnosis and test procedures.

REMOVAL

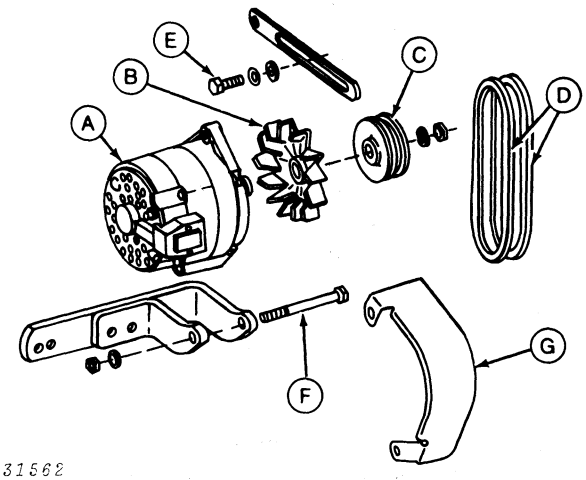

A—Alternator
B—Fan
C—Pulley
D—Drive Belts
E—Adjusting Cap Screw
F—Mounting Bolt
G—Shield

Fig. 6-Alternator Removal

To remove alternator, remove adjusting cap screw (E) and mounting bolt (F). Leave shield (G) with mounting hardware.

DISASSEMBLY

NOTE: Pulley nut need not be removed if you are certain that front bearing is in good condition. Just separate housing as described below, and leave rotor installed in front housing.

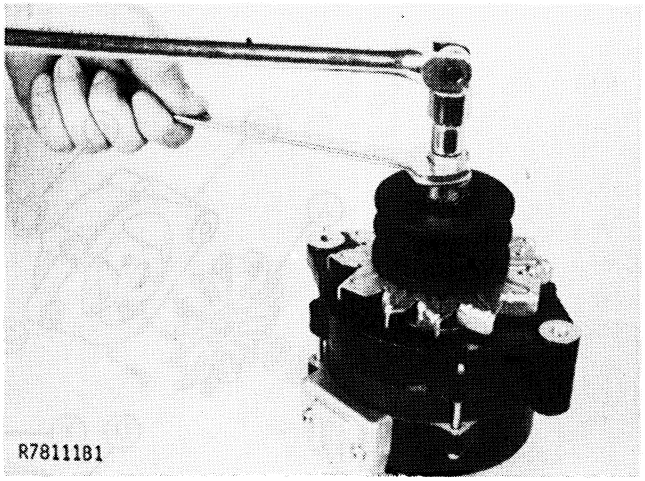

Fig. 7-Removing Alternator Pulley Nut

JD-306-A Alternator Pulley Nut Tool is recommended for removing and installing pulley nut. Install a 22 mm socket on JD-306A-1 to hold nut. Install JD-306A-2 on hex shaft of JD-306A-1 to hold rotor shaft. Hold rotor and remove nut.

NOTE: If pulley nut remover is not available, wrap a discarded, oversize V-belt around pulley. Carefully hold pulley in vise, and remove pulley nut. If pulley slips on shaft, separate housing as instructed below. Carefully hold rotor in vise, and remove pulley nut.

1. Remove pulley and fan.

2. Remove four thru bolts (N, Fig. 8), and separate front and rear housings. If necessary, pry carefully with two screwdrivers on opposite sides to force housings apart.

3. Set alternator on rear housing, and slide front housing off. Lift rotor out of rear housing.

4. Remove other components only as necessary.

REPAIR

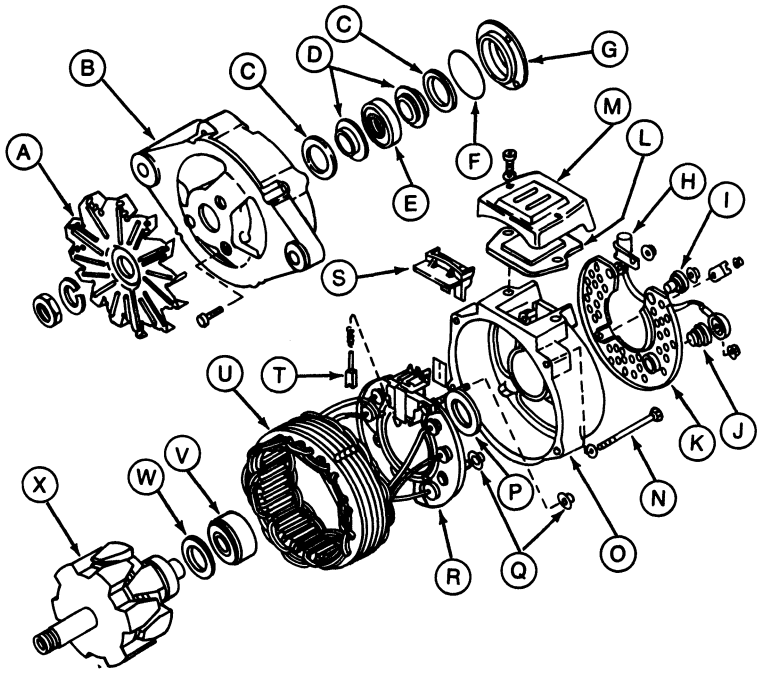

A—Fan
B—Front Housing
C—Felt Washer (2 used)
D—Collar (2 used)
E—Front Bearing
F—O-Ring
G—Bearing Retainer
H—Condenser
I —Insulating Bushing
J —Insulating Bushing
K—Rear Cover
L—Voltage Regulator
M—Regulator Cover
N—Thru Bolt (4 used)
O—Rear Housing
P—Felt Washer
Q—Insulating Bushings
R—Rectifier Bridge
S —Insulator
T —Brush (2 used)
U —Stator
V —Rear Bearing
W—Felt Washer
X —Rotor

Fig. 8-Alternator

Bearings

IMPORTANT: Do not clean bearings in solvent.

Bearings (E and V, Fig. 8) may be reused if not damaged. Wipe bearings, bearing cavities, collars, and felt washers with a clean cloth. Coat bearing with a thin film of Chevron SRI-2 grease or its equivalent, and place 1/4 to 1/2 teaspoon (1 to 2 cm^3) of same lubricant in bearing cavity.

Rotor

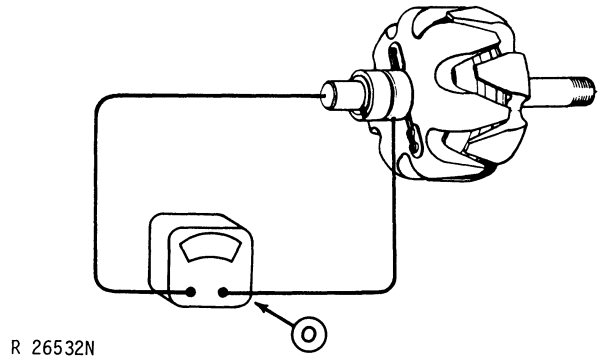

O—Ohmmeter

Fig. 9-Checking Rotor for Grounds

To check rotor for grounds, use an ohmmeter or test lamp to test for continuity between each slip ring and rotor shaft. Replace rotor if test shows continuity.

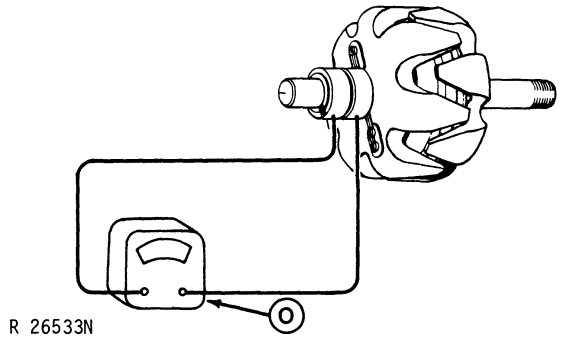

O—Ohmmeter

Fig. 10-Checking Rotor for Open Circuit

To check rotor for open circuit or short circuit, use an ohmmeter to measure resistance from one slip ring to the other. Resistance should be 3 to 5 ohms. Replace rotor if resistance is too high or low.

Rough or out-of-round slip rings result in short brush life. If slip rings are defective, mount rotor on lathe. If rings are scored, turn them just enough to eliminate roughness. If rings are out-of-round, turn them to within 0.002 inch (0.05 mm) total indicator reading.

Polish slip rings sparingly with number 00 sandpaper or 400-grit silicon carbide paper.

IMPORTANT: Clean rotor and stator with compressed air only. Cleaning solvent would damage insulation.

Brushes

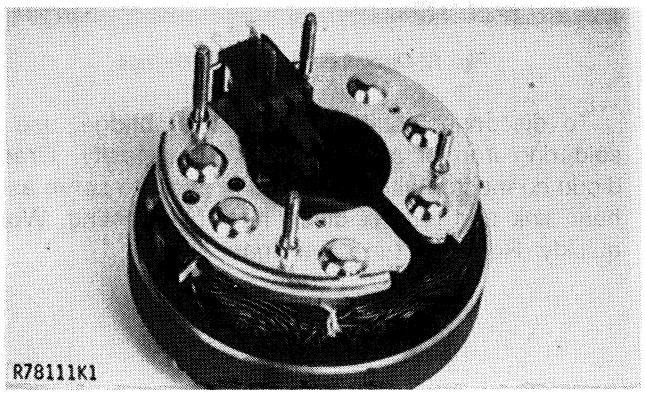

Fig. 11-Inspecting Brushes

1. Inspect brushes for damage. Be sure they slide freely without binding or sticking. Be sure springs have enough strength to hold brushes firmly against slip rings.

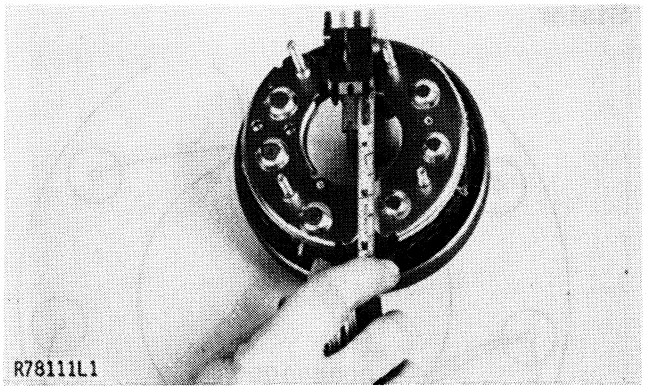

Fig. 12-Brush Length

2. Measure brushes for wear. If exposed length is less than 1/4 inch (6 mm), install new brushes.

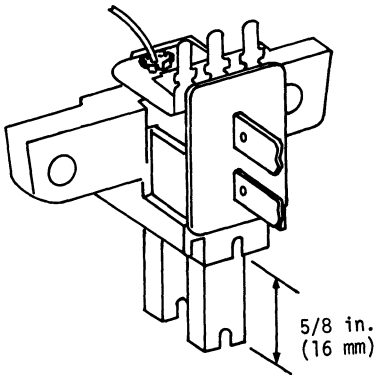

Fig. 13-Installing New Brushes

When installing new brushes, block them in position so that exposed length is 5/8 inch (16 mm). Solder brush leads firmly in this position, and cut off excess length of leads.

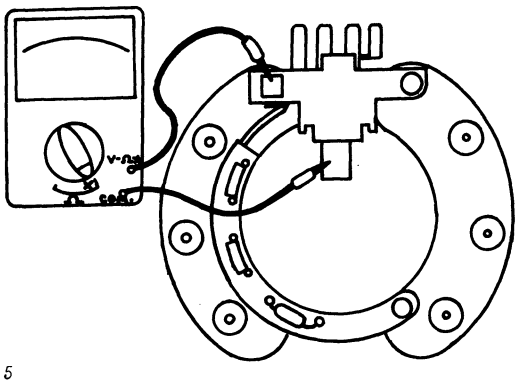

Fig. 14-Checking Brushes for Shorts or Grounds

3. Use an ohmmeter or test light to check for continuity between the two brushes and between each brush and ground. There should be no continuity.

If brush holder is defective, entire rectifier bridge must be replaced.

Stator

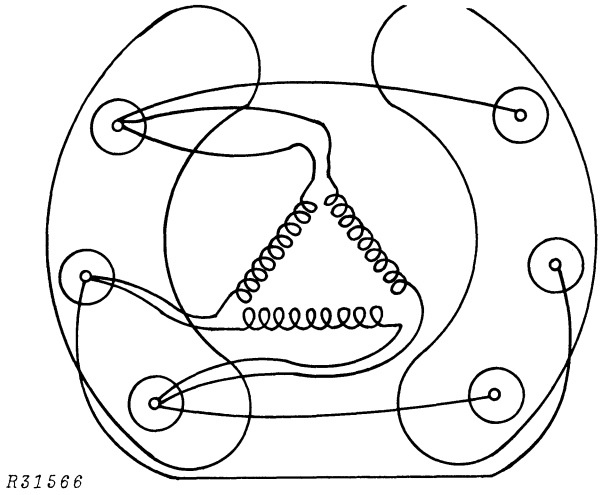
R31566

Fig. 15-Stator

Stator windings are "delta" connected. Each winding is connected to the other two like the sides of a triangle. Stator also contains three other wires in addition to the windings. These wires simply connect the diodes on grounded side of rectifier bridge to those on output side.

Inspect stator for defective insulation. Check for discoloration or a burned smell which would indicate a short circuit. Replace stator if you find any defect.

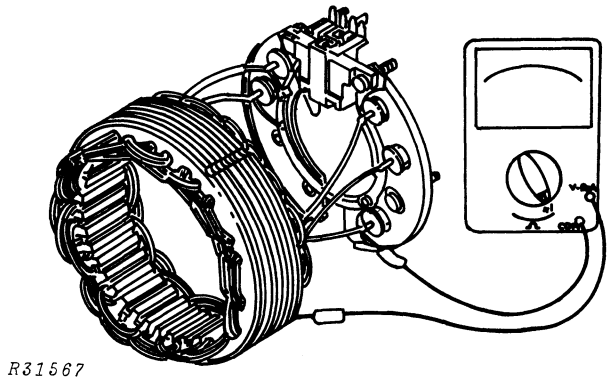
R31567

Fig. 16-Checking Stator for Grounds

NOTE: Stator cannot be tested for an open circuit without disconnecting terminals from stator windings.

To check stator for grounds, use an ohmmeter or test lamp to test for continuity between each stator lead and stator frame. Replace stator if test shows continuity.

A stator will occasionally exhibit an open circuit or short circuit only when hot, making the defect even more difficult to diagnose.

If you suspect, but cannot confirm, that stator is defective, double check all other components. If problem cannot be found elsewhere, replace stator.

IMPORTANT: Clean stator and rotor with compressed air only. Cleaning solvent would damage insulation.

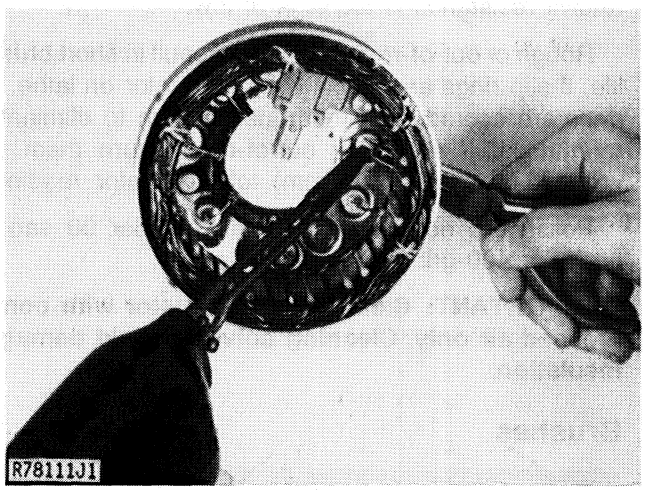

Fig. 17-Disconnecting Stator Windings

To disconnect stator from rectifier bridge, use a soldering iron of at least 120-watt capacity. Grasp diode connector with needle-nose pliers to serve as a heat sink and protect diode from overheating. Work quickly. Reconnect in same manner.

Rectifier Bridge

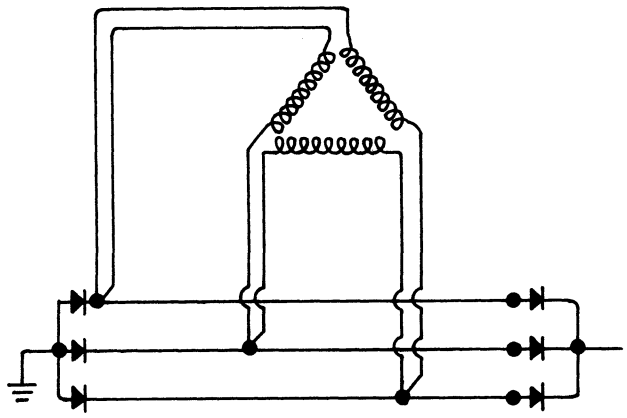

R31568

Fig. 18-Schematic Diagram of Rectifier Bridge

Alternating current is generated in stator windings. Rectifier bridge has six diodes to convert alternating current to direct current. Each diode should permit current to flow in only one direction.

In order to test diodes, it is necessary to disconnect stator. Test diodes only when you have reason to suspect they are defective. This would be indicated by excessive AC voltage ripple or low output when alternator is tested on tractor.

Disconnect stator windings as instructed previously, and use ohmmeter to check all diodes.

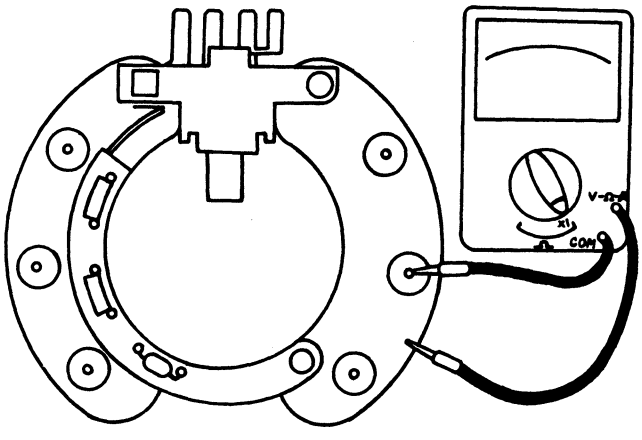

R31569

Fig. 19-Testing Diodes

1. With one ohmmeter probe against metal base, touch other probe to each of the three diode connectors on that half of rectifier bridge. Note ohmmeter reading.

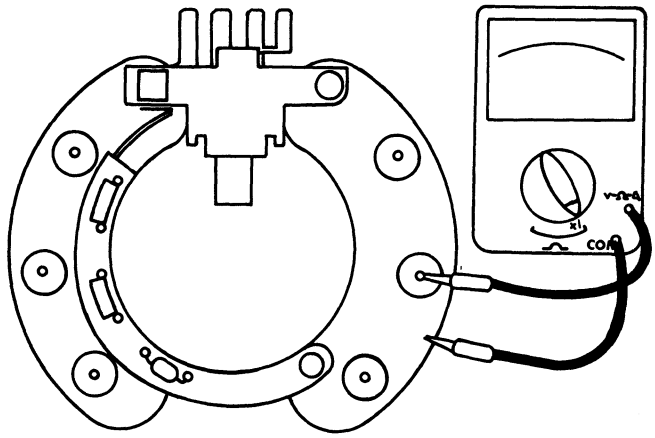

R31570

Fig. 20-Reversing Probes

2. Reverse the ohmmeter probes to check continuity in opposite direction. Each diode should have continuity in only one direction. A shorted diode would have continuity in both directions. An open diode would not have continuity in either direction.

3. Repeat the checks for other three diodes. If any diode is defective, rectifier bridge must be replaced.

Test diode/resistor trio in a similar manner.

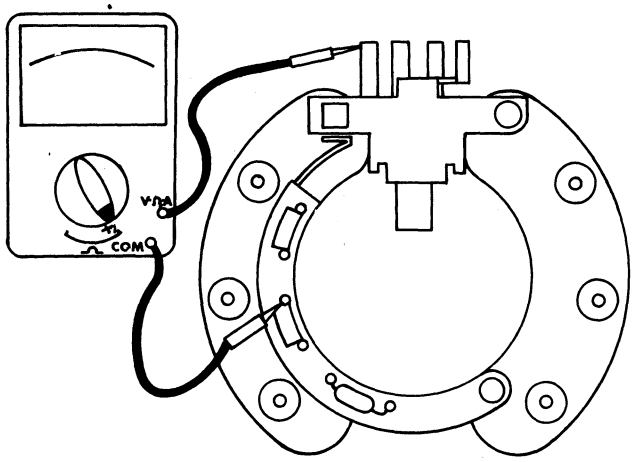

R31571

Fig. 21-Testing Diode/Resistor Trio

1. With one ohmmeter probe against terminal "G", touch other probe to the NEARER terminal (the terminal which would be connected to stator windings) of each of the two diodes in diode/resistor trio. Note ohmmeter reading.

2. Reverse the ohmmeter probes to check continuity in opposite direction. Each diode should have continuity in only one direction. If either diode is defective, rectifier bridge must be replaced.

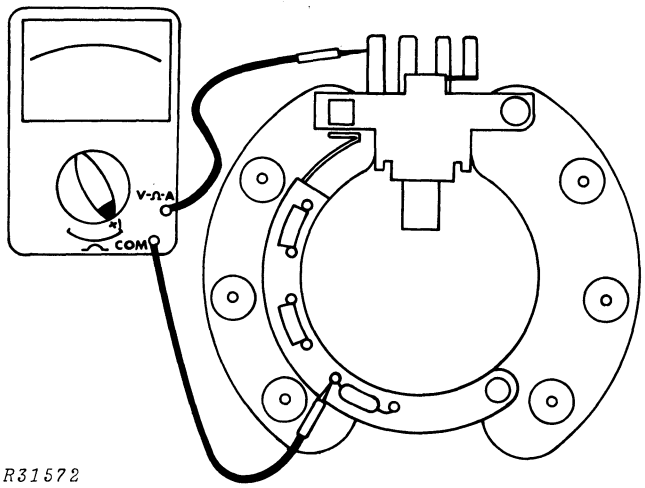

Fig. 22-Testing Resistor

3. With one ohmmeter probe against terminal "G", touch other probe to NEARER terminal of resistor. Resistance should be about 100 ohms. If resistor is defective, rectifier bridge must be replaced.

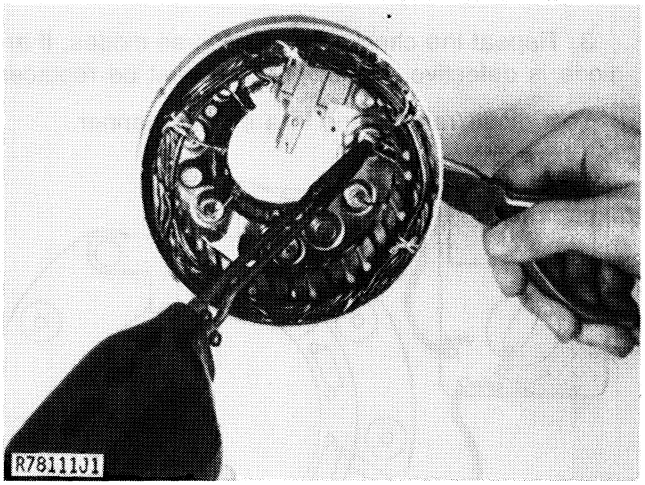

Fig. 23-Connecting Stator Windings

When connecting stator windings, connect the triple leads to side of rectifier bridge with diode/resistor trio. Connect each triple lead to both a rectifier diode and the diode/resistor trio.

Use a soldering iron of at least 120-watt capacity. Grasp diode connector with needle-nose pliers to serve as a heat sink and protect diode from overheating. Solder all nine connections, working quickly on each to prevent overheating.

Regulator

The only suitable way to test regulator is to install it on an alternator you know is good. Perform test procedures outlined in Group 10. Replace regulator if regulated voltage is too high or low.

ASSEMBLY

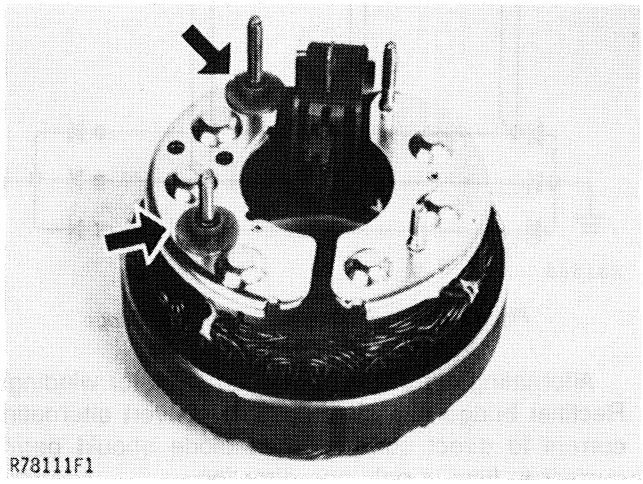

Fig. 24-Insulating Bushings

1. Place insulating bushings on two screws on output side of rectifier bridge.

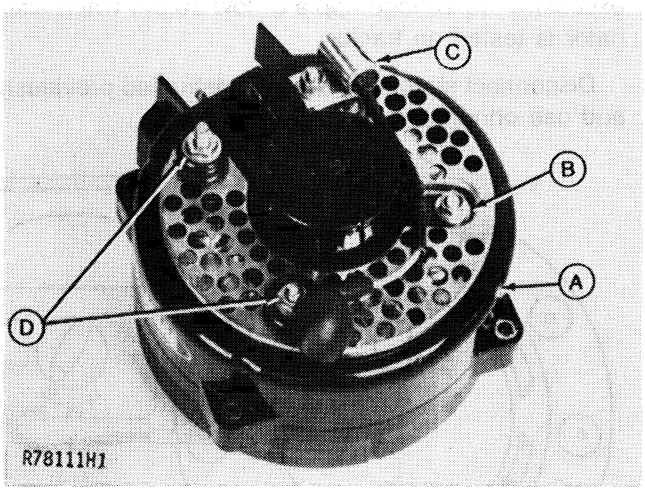

A—Rear Housing
B—Cover
C—Condenser
D—Insulating Bushings

Fig. 25-Installing Rear Housing

2. Install rectifier bridge in rear housing (A, Fig. 25), attaching cover (B) and condenser (C). Be sure insulating bushings (D) are over screws on output side and one nut is under condenser bracket.

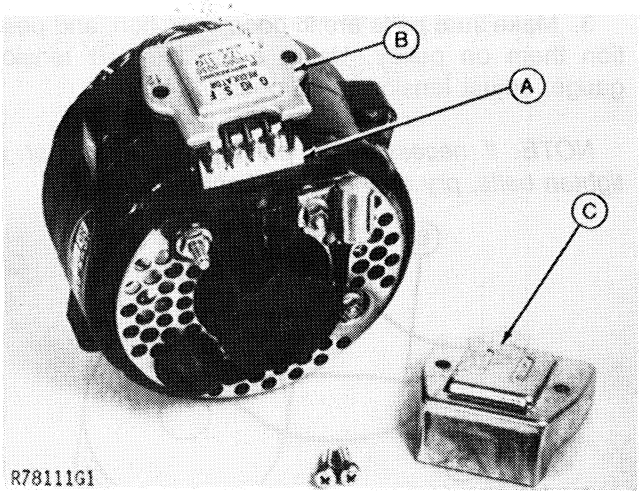

A—Insulator
B—Regulator
C—Regulator Cover

Fig. 26-Installing Regulator

3. Slip insulator (A, Fig. 26) over regulator terminals, and slip it back into notches at base of terminals. Install regulator (B) and cover (C).

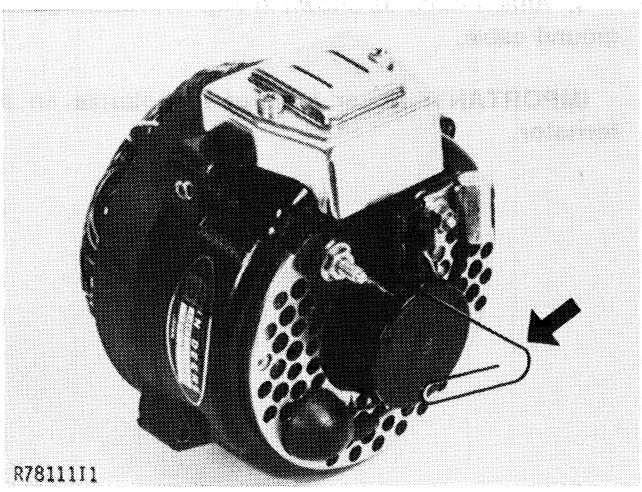

Fig. 27-Blocking Brushes in Position with Wire

4. Push brushes back to clear rear bearing. Block brushes in position by inserting a wire through hole in rear housing. Install rotor in rear housing and remove wire.

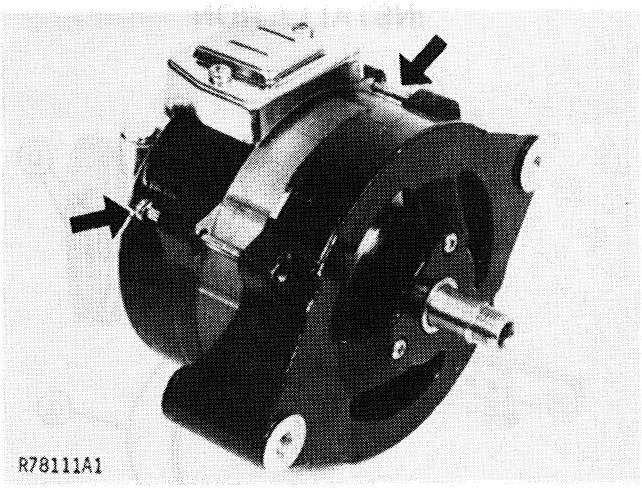

Fig. 28-Installing Front Housing

5. Slide front housing onto rotor shaft and secure with four thru bolts. Bolt holes will align in only one position.

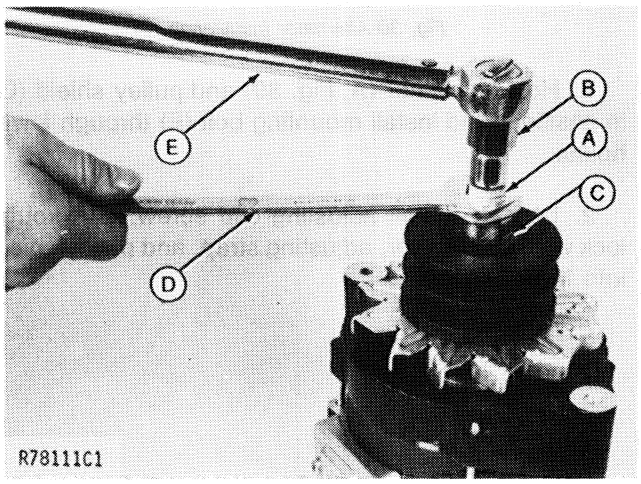

A—JD-306A-1
B—JD-306A-2
C—22 mm Socket
D—3/4-Inch Wrench
E—Torque Wrench

Fig. 29-Installing Pulley Nut

6. Install fan, pulley, lock washer, and nut. Tighten nut to 60 ft-lbs (80 Nm) (8 kgm) torque.

JD-360A Alternator Pulley Nut Tool is recommended for installing pulley nut. Install a 22 mm socket on JD-306A-1 to hold nut. Install JD-306A-2 on hex shaft of JD-306A-1 to hold rotor shaft. Hold rotor shaft with torque wrench and tighten nut.

INSTALLATION

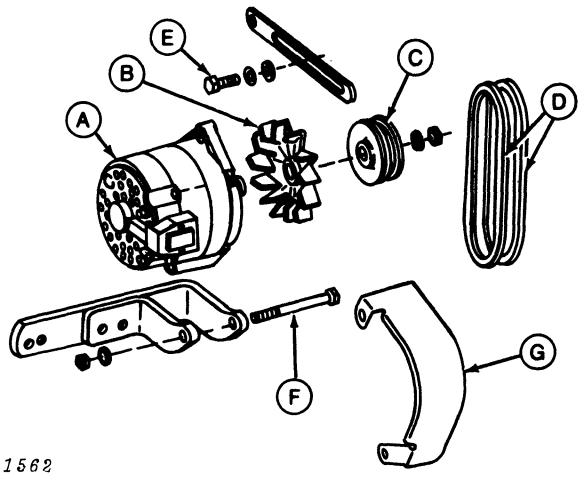

R31562

A—Alternator
B—Fan
C—Pulley
D—Drive Belts
E—Adjusting Cap Screw
F—Mounting Bolt
G—Shield

Fig. 30-Alternator Installation

1. Hold alternator (A, Fig. 30) and pulley shield (G) in position, and install mounting bolt (F) through lower holes.

2. Loosely install adjusting cap screw (E) through lock washer, washer, adjusting strap, and pulley shield into front housing.

3. Make sure belts are in good condition, and position them on pulley. Using a reliable belt tension gauge, adjust tension to 95 pounds (425 N).

NOTE: If necessary to pry against alternator to tighten belts, pry only against front housing.

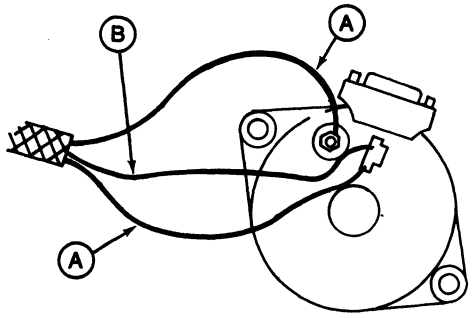

R31573

A—Red
B—Resistance Wire

Fig. 31-Alternator Connections

4. Attach wires as shown in Fig. 31. Attach battery ground cable.

IMPORTANT: Never attempt to polarize an alternator.

Group 25
DELCO-REMY STARTING CIRCUIT

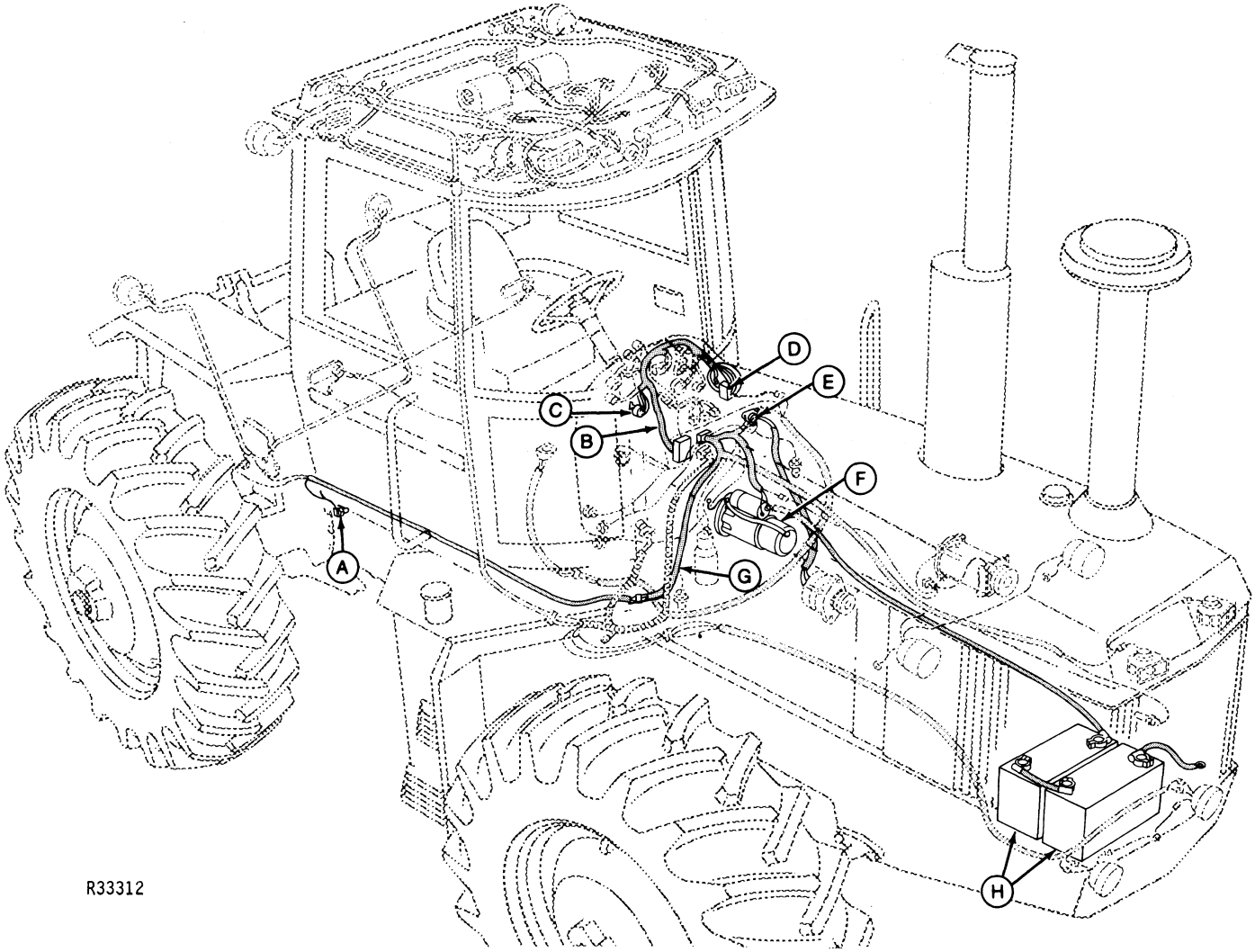

A—Neutral Start Switch
B—Instrument Harness
C—Key Switch
D—Circuit Breakers
E—Starter Circuit Relay
F—Starter
G—Engine Harness
H—Batteries

Fig. 1-Starting Circuit Components

GENERAL INFORMATION

NOTE: Tractor may have either John Deere or Delco-Remy starter. See Group 30 for John Deere Starting Circuit.

8430 Tractor may have either early model (Delco-Remy model number 1113402 or 1113672) or late model (Delco-Remy model number 1113391).

IMPORTANT: Never operate starting motor longer than 30 seconds. Allow at least two minutes for cooling and battery recovery before operating again. Overheating, caused by excessive operation, will seriously damage starting motor.

HOW THE SYSTEM WORKS

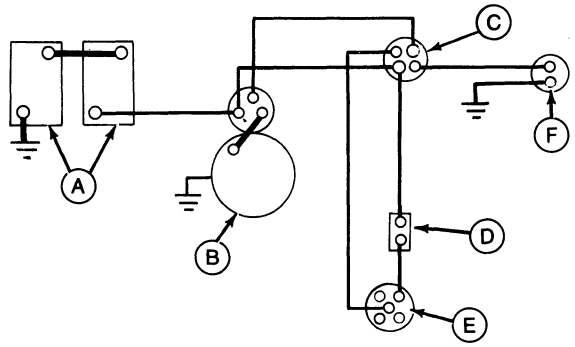

R 26540N

A—Batteries
B—Starting Motor
C—Starter Circuit Relay
D—10-Amp Circuit Breaker
E—Key Switch
F—Neutral Start Switch

Fig. 2-Starting Circuit

Fig. 2 shows components of starting circuit. Wiring is contained in engine and instrument harnesses. For additional wiring diagrams, see Group 5.

Current flows from batteries (A, Fig. 2) by way of starter (B) and starter circuit relay (C) to electrical load center. Unless circuit breaker (D) is tripped, current flows on to BAT terminal of key switch (E).

When key switch is in start position, current flows to small upper terminal of starter circuit relay. If transmission is in neutral, current flows through neutral start switch (F) to ground, closing relay..

When starter circuit relay closes, it provides continuity between large terminals. Current flows to switch terminal of starter solenoid, engaging starter.

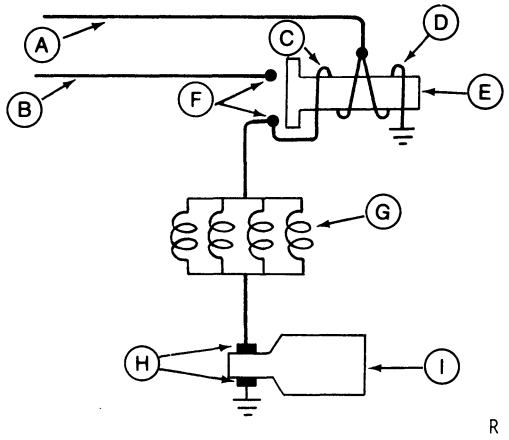

R 31394

A—Wire from Relay
B—Cable from Battery
C—Pull-In Winding
D—Hold-In Winding
E—Solenoid Plunger
F—Main Contacts
G—Field Windings
H—Commutator Brushes
I —Armature

Fig. 3-Circuitry Inside Starter

When wire from relay (A, Fig. 3) is energized, current flows through both pull-in winding (C) and hold-in winding (D) to ground.

Current through windings engages solenoid plunger (E), which closes main contacts (F). When main contacts close, both ends of pull-in winding have same voltage, so current through pull-in winding stops. Current continues through hold-in winding, keeping solenoid engaged and main contacts closed.

With main contacts closed, current flows from battery cable (B) to starting motor at a very high rate. Four heavy field windings (G) carry current to commutator brushes (H).

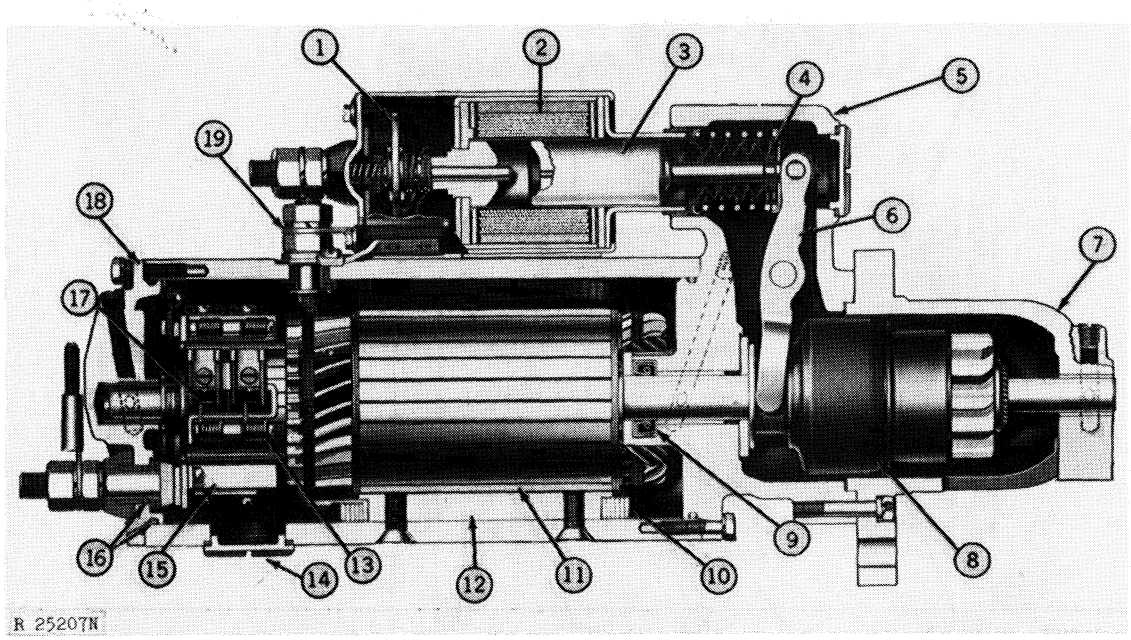

1—Contact Assembly
2—Solenoid Windings
3—Solenoid Plunger
4—Boot
5—Lever Housing
6—Shift Lever
7—Drive End Housing
8—Overrunning Clutch
9—Oil Seal
10—Field Windings
11—Armature
12—Field Pole Shoe
13—Brush Spring
14—Brush Plug
15—Brush Holder
16—O-Rings
17—Brush
18—Commutator End Frame
19—Field Terminal

Fig. 4-Sectional View of 8630 Tractor Starter

From field windings, current flows through armature windings (I) to ground, making contact through commutator brushes (H).

Strong magnetic fields are set up by current flow through field windings and armature windings. Windings are arranged so that magnetic fields constantly repel each other, rotating armature.

When solenoid engages, it pulls the shift lever. Shift lever pushes overrunning clutch drive to engage pinion in starter gear on flywheel. As armature turns, it cranks engine.

When engine starts, overrunning clutch spins freely on shaft. This prevents overspeeding of armature by flywheel.

When key switch is released, current to solenoid hold-in winding is shut off. Current can feed through both pull-in and hold-in windings from main contacts, but direction of current is reversed in pull-in winding. The two windings cancel each other, and solenoid is released.

A spring pushes solenoid back to disengaged position. This opens main contacts and shuts off current to field windings and armature.

Shift lever retracts overrunning clutch drive, disengaging pinion from flywheel. Brake washer slows armature to a stop.

NOTE: See Group 10 for all diagnosis of electrical system.

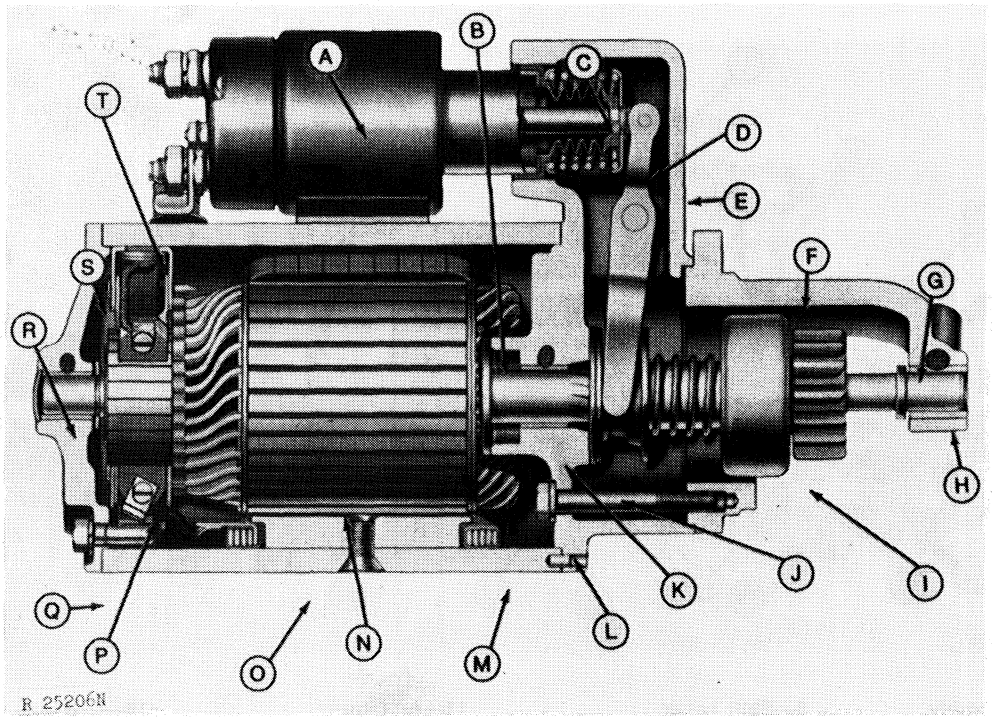

A—Solenoid
B—Thrust Washer
C—Linkage
D—Shift Lever
E—Lever Housing
F—Nose Housing
G—Pinion Stop
H—Bronze Bushing
I —Overrunning Clutch
J —Brake Washer
K—Bronze Bushing
L —Attaching Bolt
M—Field Coil
N—Armature
O—Pole Shoe
P —Commutator
Q—Thru Bolt
R—Bronze Bushing
S—Commutator End Frame
T—Field Connector

Fig. 5-Sectional View of 8430 Tractor Starter (Early Model Shown)

STARTING MOTOR REMOVAL

1. Inspect starting motor for obvious defects before removing it. Check for loose mounting bolts or pole shoe retaining screws. Operate starting motor and listen for rattling, squealing, or grinding.

2. Disconnect battery ground cable.

3. Disconnect cable and wires from solenoid.

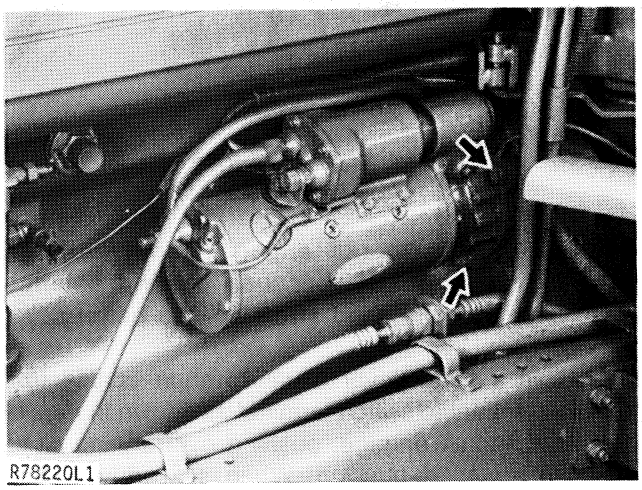

Fig. 6-Starter Mounting Bolts

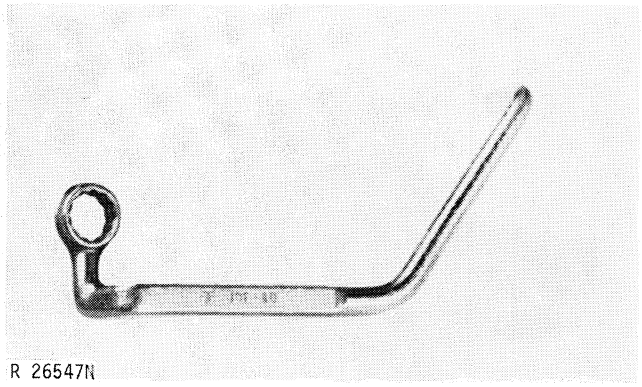

Fig. 7-JDE-8 Starter Wrench

4. Remove mounting bolts. On 8430 Tractor, use JDE-80 Starter Wrench to remove starter mounting nut located behind starter.

TESTS BEFORE DISASSEMBLY

Observe starting motor carefully before beginning disassembly. Problem may be readily apparent, making repair much easier.

Solenoid

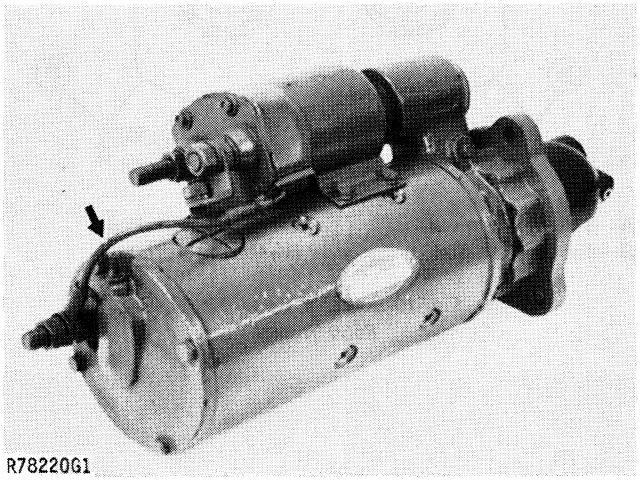

Fig. 8-Solenoid Ground Wire

1. On 8630 tractor, be sure solenoid ground wire is connected to starter frame.

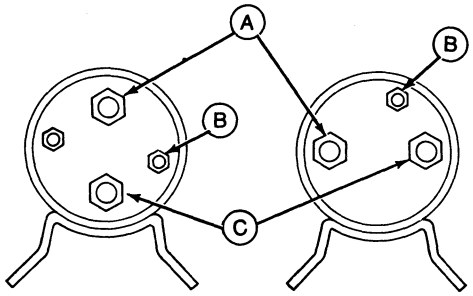

EARLY TRACTORS **LATER TRACTORS**

A—Battery Terminal **C—Motor Terminal**
B—Switch Terminal

Fig. 9-Solenoid Terminals (8430 Tractor)

TESTS BEFORE DISASSEMBLY —Continued

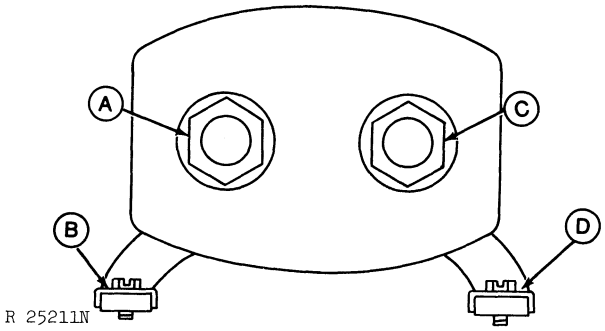

A—Battery Terminal
B—Switch Terminal
C—Motor Terminal
D—Return Terminal

Fig. 10-Solenoid Terminals for 8630 Tractor

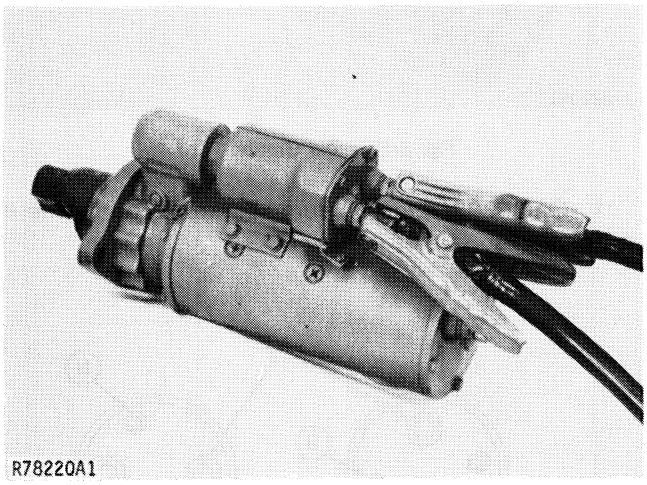

Fig. 11-Jumper Cable Connections (8630 Shown)

2. Connect a 12-volt battery to solenoid with heavy-duty jumper cables. Connect battery terminal on solenoid to positive battery terminal and motor terminal to negative battery terminal.

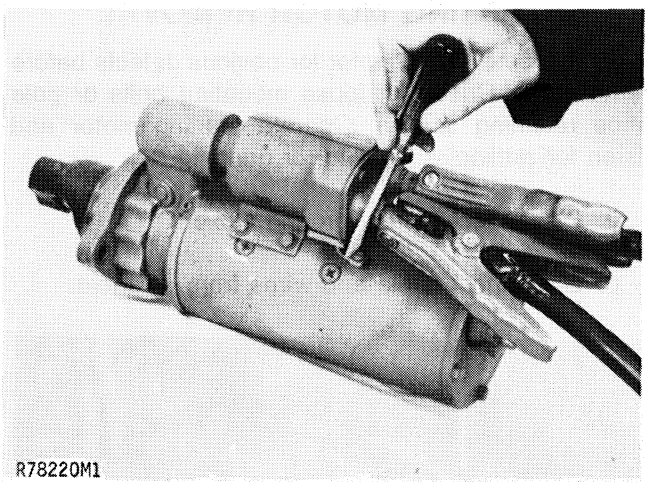

Fig. 12-Testing Solenoid (8630 Shown)

IMPORTANT: Do not engage solenoid longer than 1 to 2 seconds, because closing solenoid switch provides a dead short across battery.

3. Use a screwdriver blade to short across from battery terminal to switch terminal as shown in Fig. 12. Solenoid should engage, pushing overrunning clutch drive to engaged position. When screwdriver is removed, solenoid should return sharply to disengaged position.

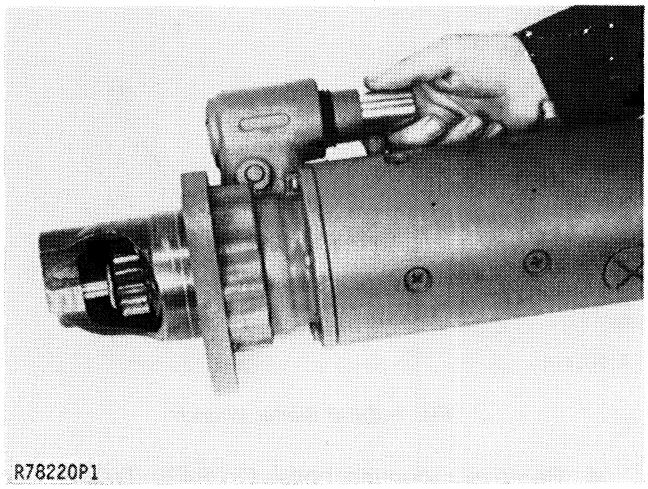

Fig. 13-Manually Moving Shift Lever

Solenoid should engage at voltages down to 8 volts. If it does not engage, remove solenoid and manually move shift lever back and forth. If lever moves smoothly, pull-in winding is defective and solenoid must be replaced. If not, disassemble and repair starter.

If solenoid engages, but then chatters instead of staying firmly engaged, hold-in winding is defective and solenoid must be replaced. (Be sure solenoid ground wire is connected to starter frame on 8630.)

If shift lever or overrunning clutch drive appears to bind, disassemble and repair starter.

Overrunning Clutch Drive

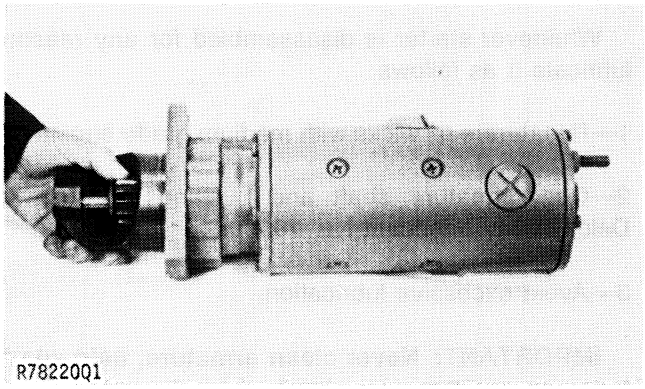

Fig. 14-Turning Overrunning Clutch Drive by Hand

Turn overrunning clutch drive by hand. It should turn freely on shaft in overrunning direction only.

Armature

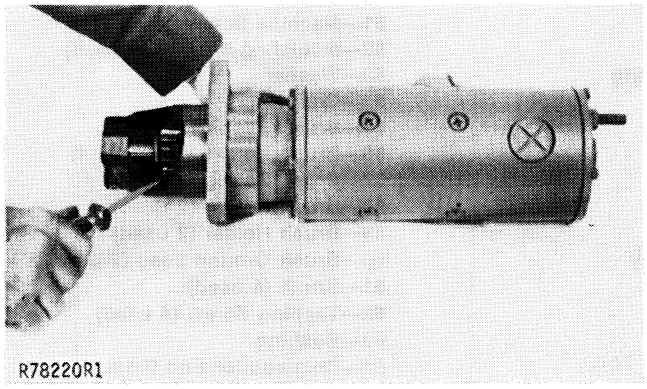

Fig. 15-Turning Armature by Hand

Turn armature by prying against pinion with screwdriver. Check for dragging armature, seized bushings, or bent shaft.

If you discover any interference, disassemble and repair starting motor. See instructions on following pages. Do not conduct no-load test unless armature turns freely.

No-Load Test

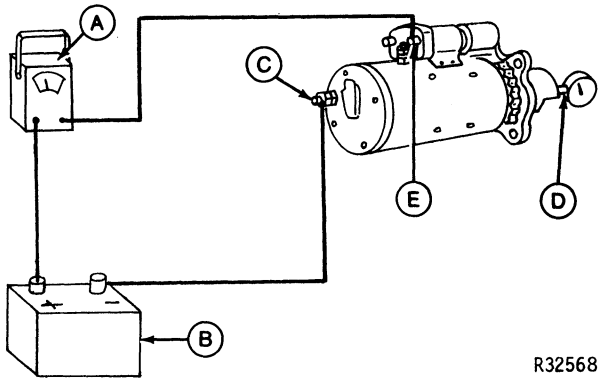

A—Ammeter
B—12-Volt Battery
C—Starter Ground Terminal (8630) or Starter Frame (8430)
D—Tachometer
E—Motor Terminal

Fig. 16-No-Load Test

1. If armature turns freely in previous step, make connections shown in Fig. 16 and conduct no-load test. Use an ammeter capable of measuring several hundred amps.

Current draw should be approximately 140 to 200 amps at 12 volts. Armature speed should be approximately 4000 to 7000 rpm.

2. If speed and current draw are slightly low, connect a voltmeter between motor terminal and motor frame. Observe voltage during test. Voltage may be reduced because of high current draw on battery.

3. If speed or current draw is significantly different than specified, diagnose problem as follows.

Fails to Operate, No Current Draw

Open field circuit (all field windings)
Open armature windings
Defective brush contact with commutator
Open solenoid windings
Defective solenoid contacts

Fails to Operate, High Current Draw

Grounded field windings or armature windings
Seized bearings

Low Speed, Low Current Draw

High internal resistance
Defective brush contact with commutator

Low Speed, High Current Draw

Excessive friction
Shorted armature
Grounded armature or field windings

High Speed, High Current Draw

Shorted field windings

NOTE: This test will not detect individual open-circuited field coils—the starter would have a slow cranking speed but would pass this test. (See Fig. 38 for open-circuited field coil test.)

DISASSEMBLY AND REPAIR

Remember two basic rules when working with starting motors:

1. Diagnose the problem as thoroughly as possible before beginning disassembly.

2. Disassemble only as far as necessary to correct problem.

Whenever starter is disassembled for any reason, lubricate it as follows:

1—Resaturate oil wicks with medium grade engine oil.

2—Coat armature shaft and bushings lightly with Delco-Remy Lubricant No. 1960954.

3—Avoid excessive lubrication.

IMPORTANT: Never clean armature, field windings, or overrunning clutch drive in solvent. All parts except overrunning clutch drive may be cleaned with mineral spirits and a brush. Wipe overrunning clutch drive with a clean cloth.

1—Solenoid Case and Coil
2—Switch Terminal Stud
3—Terminal Clip
4—Motor Terminal Stud
5—Resistor Terminal Stud
6—Clip
7—Contact and Push Rod
8—Return Spring
9—Battery Terminal Stud
10—Cover Gasket
11—Cover
12—Sealing Washers
13—Bushing
14—Drive Housing
15—Gasket
16—Wick
17—Pipe Plug
18—Retaining Ring
19—Pinion Stop
20—Motor Drive Assembly
21—Brake Washer
22—Shift Lever
23—Pin
24—Spring Retainer
25—Expansion Plug (2 used)
26—Shift Lever Shaft (2 used)
27—Expansion Plug (2 used)
28—Pipe Plug
29—Wick
30—Shift Lever Housing
31—Retaining Ring
32—Spring Retainer
33—Spring
34—Spring Retainer
35—Boot
36—Washer
37—Plunger Assembly
38—Washer
39—Armature
40—Spacer
41—Oil Seal
42—Bushing
43—Gasket
44—Field Coil Assembly
45—Pole Shoe (4 used)
46—Insulator (2 used)
47—Field Terminal Stud
48—Insulator Bushing (2 used)
49—Dowel Pin
50—Main Frame
51—Machine Screw (8 used)
52—Insulating Washer (2 used)
53—Washer
54—Connector
55—Brush Support (2 used)
56—Brush Holder Pin (2 used)
57—Brush Spring (2 used)
58—Brush Holder (2 used)
59—Brush Holder (2 used)
60—Brush Ground Lead (2 used)
61—Brush (4 used)
62—Tapping Screw (4 used)
63—Bushing
64—Commutator End Frame
65—Pipe Plug
66—Wick
67—Thru Bolt O-Ring (2 used)
68—Expansion Plug

Legend for Fig. 17

Litho in U.S.A.

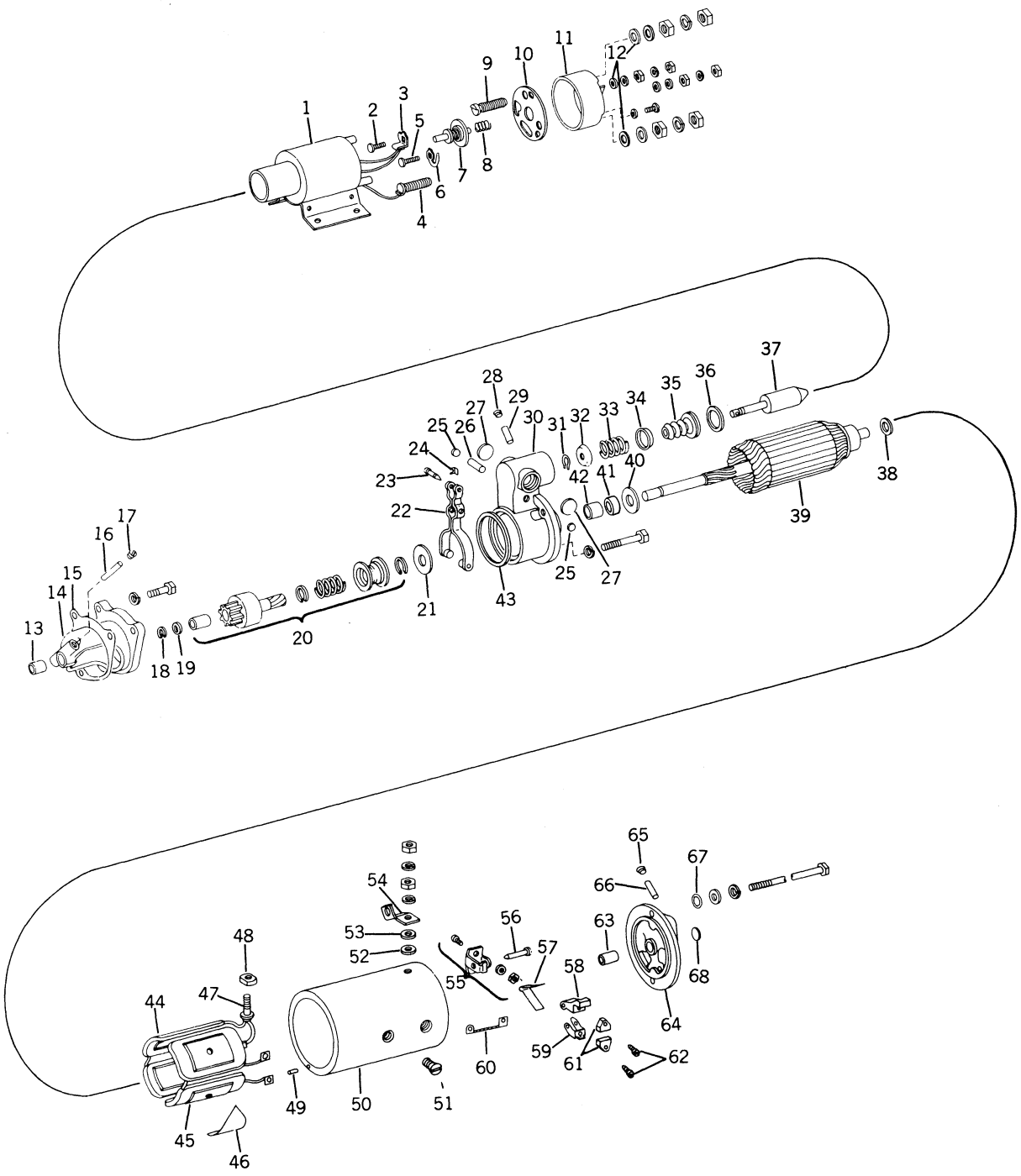

R 25215N

Fig. 17-Exploded View of Starting Motor (Early Model 8430 Tractors)

Solenoid

Removal - Early 8430 Tractor

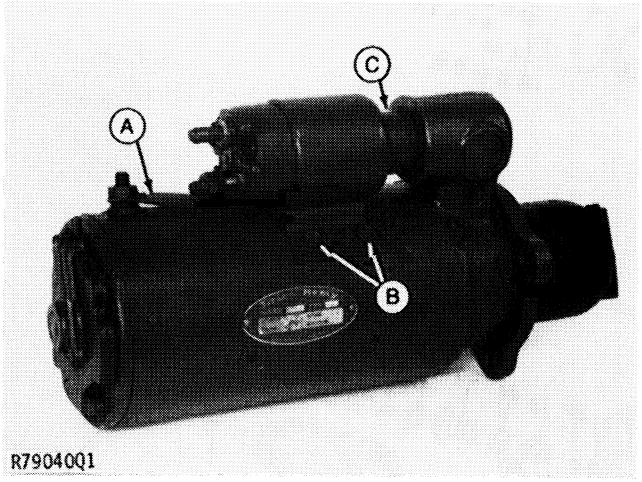

A—Field Winding Connector
B—Mounting Bolts
C—Boot

Fig. 18-Removing Solenoid

1. Remove field winding connector (A, Fig. 18).

2. Remove mounting bolts (B).

3. Push boot (C) back, and slide solenoid away from boot and plunger.

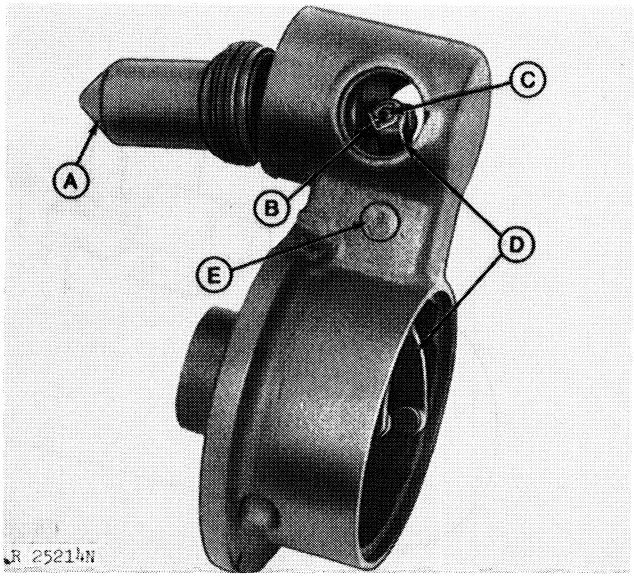

A—Solenoid Plunger
B—Retaining Clip
C—Pin
D—Shift Lever
E—Small Expansion Plug

Fig. 19-Plunger and Solenoid Linkage

4. ONLY IF NECESSARY, remove large expansion plug, retaining clip, pin, and solenoid plunger (Fig. 19). To remove shift lever, remove small expansion plugs.

1—Solenoid Case and Coil
2—Switch Terminal Stud (2 used)
3—Motor Terminal Stud
4—Contact and Push Rod
5—Return Spring
6—Battery Terminal Stud
7—Cover Gasket
8—Cover
9—Sealing Washers
10—Rear Bushing
11—Drive Housing
12—Wick
13—Pipe Plug
14—Retaining Ring
15—Pinion Stop
16—Overrunning Clutch Drive
17—Shift Lever
18—O-Ring
19—Plug
20—Brake Washer
21—Gasket
22—O-Ring
23—Shift Lever Shaft
24—O-Ring
25—Shift Lever Housing
26—Special Nut
27—Retaining Ring
28—Spring Retainer
29—Shift Lever Spring
30—Spring Retainer
31—Boot
32—Washer
33—Plunger
34—Washer
35—Armature
36—Spacer
37—Oil Seal
38—O-Ring
39—Center Bushing
40—Pipe Plug
41—Wick
42—Retaining Ring
43—Field Winding Assembly
44—Pole Shoe (4 used)
45—Insulator (2 used)
46—Field Terminal Stud
47—Insulator Bushing
48—Main Frame
49—Machine Screw (8 used)
50—Field Winding Connector
51—Brush Support (2 used)
52—Brush Holder Support Pin (2 used)
53—Brush Holder Pin (2 used)
54—Brush Spring (2 used)
55—Brush Ground Lead (2 used)
56—Brush Holder (2 used)
57—Brush Holder (2 used)
58—Brush (4 used)
59—Tapping Screw (4 used)
60—Front Bushing
61—Commutator End Frame
62—Pipe Plug
63—Wick

Legend for Fig. 20

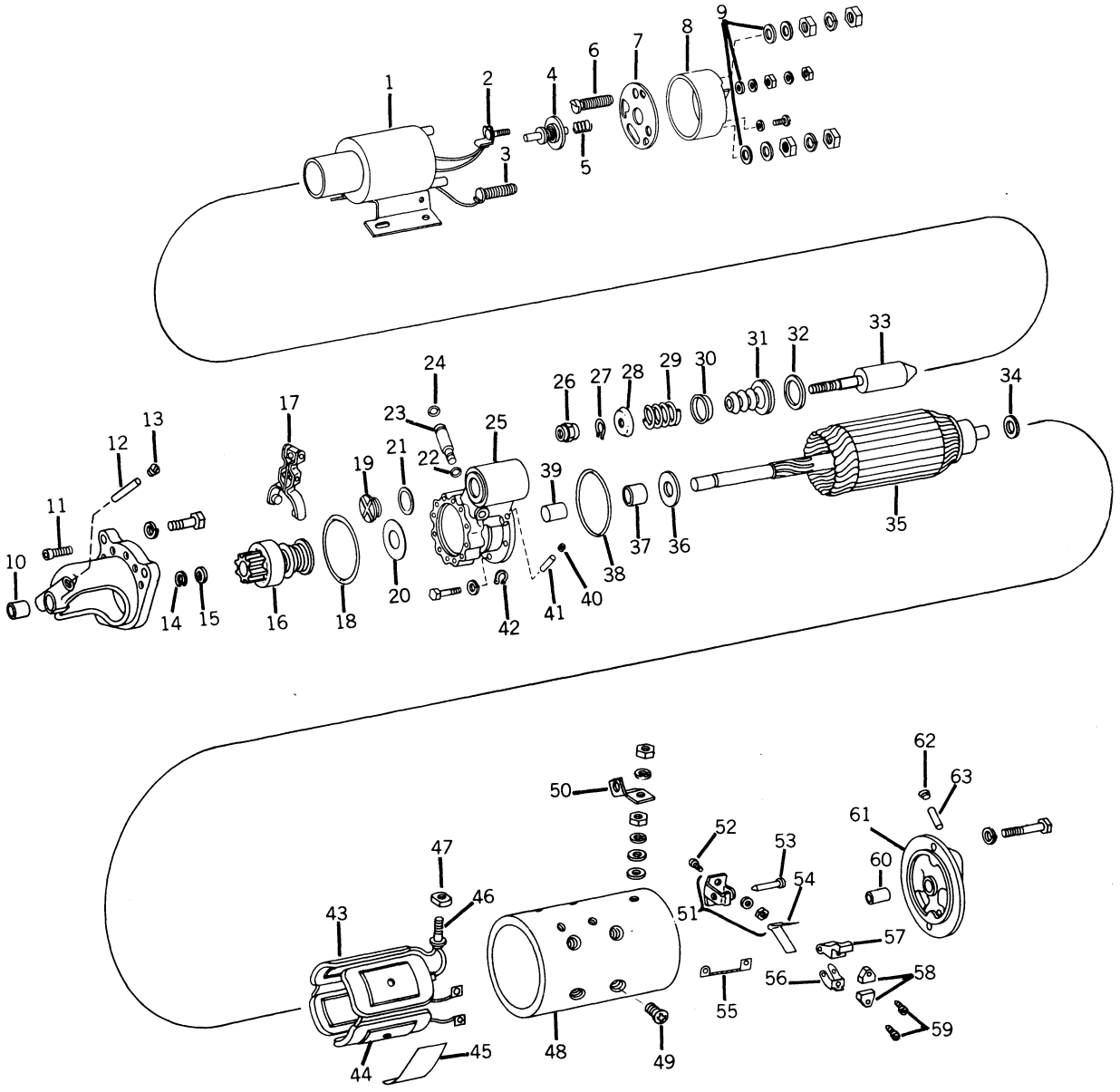

Fig. 20-Exploded View of Starting Motor (Later Model 8430 Tractors)

Removal - Late 8430, 8630 Tractors

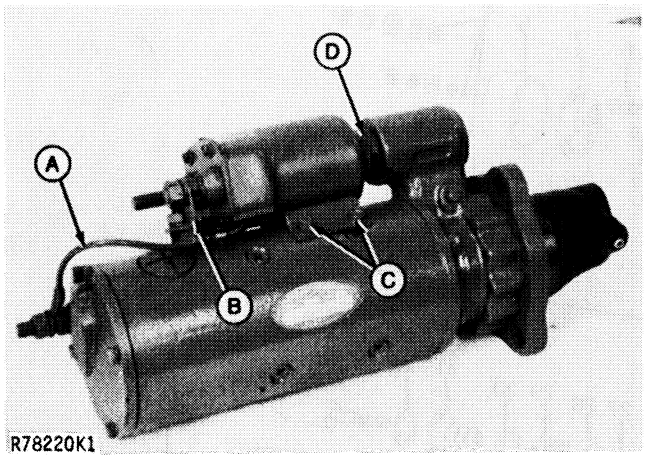

A—Solenoid Ground Wire
B—Field Winding Connector
C—Mounting Bolts
D—Boot

Fig. 21-Removing Solenoid

1. Disconnect solenoid ground wire (A, Fig. 21). (8630 only)

2. Remove field winding connector (B).

3. Remove mounting bolts (C).

4. Push boot (D) back, and slide solenoid away from boot and plunger.

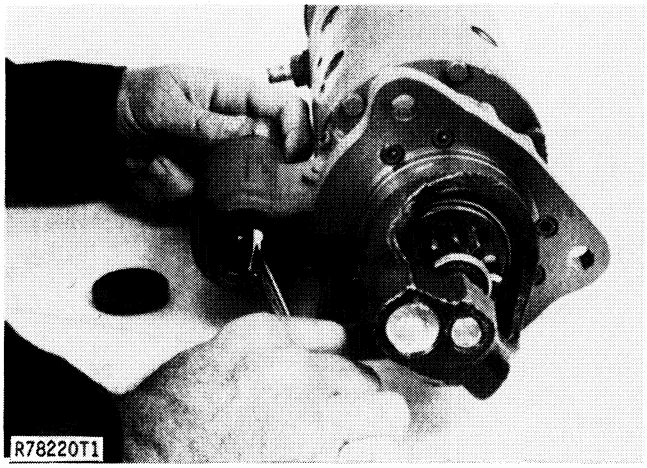

Fig. 22-Removing Solenoid Plunger

5. ONLY IF NECESSARY, remove cover plug and disconnect solenoid plunger from shift lever. Grasp plunger and remove self-locking nut.

NOTE: Pinion clearance is controlled by self-locking nut. Do not change adjustment unless required. Before installing starter, check pinion clearance as instructed on page 24.

1—Terminal Plate Gasket
2—Terminal Stud (2 used)
3—Machine Screw
4—Solenoid Winding Terminal
5—Terminal Insulation
6—Terminal Plate
7—Packing (3 used)
8—Insulator (2 used)
9—Plain Washer (4 used)
10—Lock Washer (7 used)
11—Jam Nut (5 used)
12—Hex. Nut (3 used)
13—Self-Locking Nut
14—Retainer Clip (2 used)
15—Spring Retainer
16—Solenoid Return Spring
17—Spring Retainer
18—Boot
19—Washer
20—Solenoid Plunger
21—Solenoid Winding and Case Assembly
22—Sealing Nut (4 used)
23—Lock Clip (2 used)
24—Machine Screw (2 used)
25—Contact Assembly
26—Contact Return Spring
27—Solenoid Return Wire
28—Field Frame
29—Brush Plug Gasket (2 used)
30—Plug (3 used)
31—Field Coil Lead Insulator (2 used)
32—Field Coil and Brush Lead Insulator
33—Field Terminal Stud
34—Insulator
35—Special Packing
36—Insulating Washers (1-inch [25 mm] O.D.) (2 used)
37—Solenoid Mounting Screw (4 used)
38—Field Coil Connector
39—Brush Holder Assembly
40—Insulating Washers (7/8-inch [22 mm] O.D.) (2 used)
41—Insulator Bushing
42—O-Ring (2 used)
43—Commutator End Frame Bushing
44—Commutator End Frame
45—Lubricating Wick (3 used)
46—Plug (3 used)
47—Lock Washer (9 used)
48—Special Hex. Screw (9 used)
49—Insulator
50—Brush (8 used)
51—Machine Screw (8 used)
52—Brush Spring (8 used)
53—Plain Washer (3 used)
54—Lock Washer (3 used)
55—Machine Screw (3 used)
56—Field Pole Shoe (4 used)
57—Field Coil Assembly
58—Gasket
59—Brake Washer
60—Pole Shoe Screw (8 used)
61—Adjusting Hole Plug Gasket
62—Seal Plug
63—Shift Lever Shaft
64—O-Ring
65—Small O-Ring
66—Shift Lever Housing
67—Lever Housing Bushing
68—Oil Seal
69—Spacer Washer
70—Armature
71—Thrust Washer
72—Drive End Housing Bushing
73—Special Screw (1-1/2 inches [38 mm] long) (5 used)
74—Special Screw (7/8-inch [22 mm] long) (2 used)
75—Drive End Housing
76—Split Washer (2 used)
77—Pinion Stop Cup
78—Pinion
79—Small Washer
80—Spring
81—Spring Cup
82—Large Washer
83—Spacer
84—Overrunning Clutch Bushing
85—Overrunning Clutch
86—Shift Lever

Legend for Fig. 23

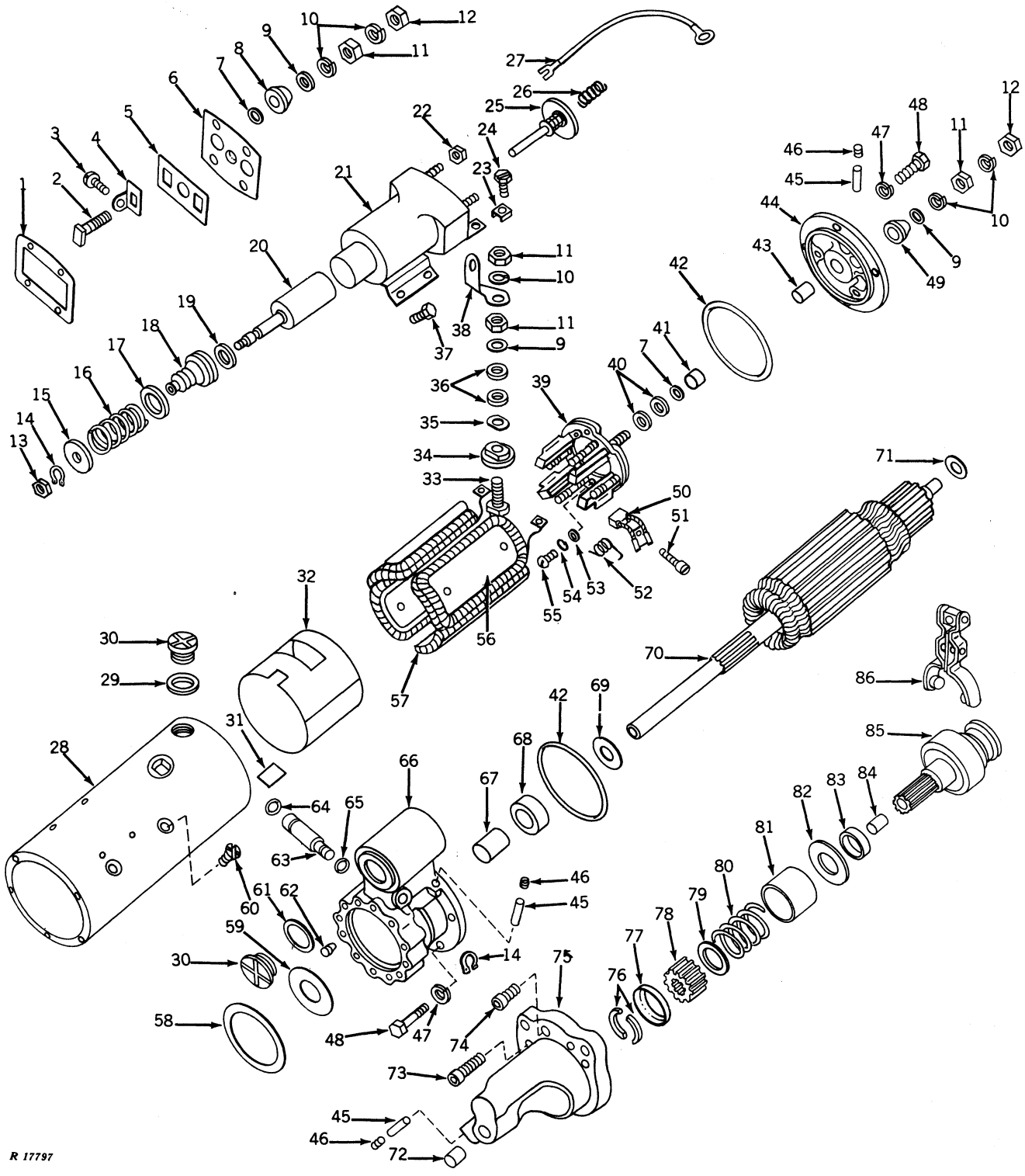

Fig. 23-Exploded View of Starter for 8630 Tractor

Repair - 8430 Tractor (Early and Late)

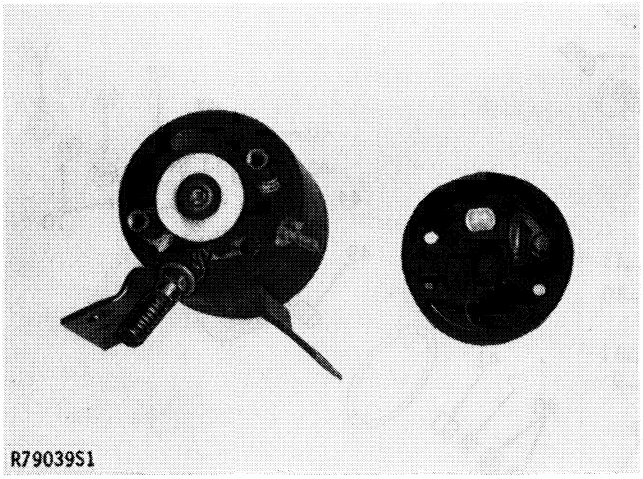

Fig. 24-Solenoid Contacts

Remove nuts and sealing washers from solenoid motor and "S" terminals. Remove switch cover and gasket and inspect all parts. Replace contact disk if it is badly corroded.

Replacement "S" terminal clips and motor terminal studs are soldered to winding leads. Be sure all connections are clean and tight. Always use new gaskets and sealing washers when assembling a solenoid.

Repair - 8630 Tractor

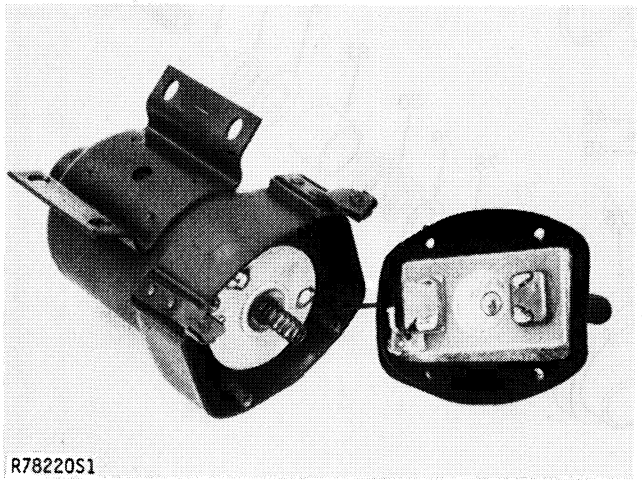

Fig. 25-Solenoid Contacts

Solenoid assembly is serviceable. Remove end plate and inspect all parts. Replace contact disk if it is badly corroded. Be sure all connections are clean and tight. Always use new sealing washers and gaskets when assembling a solenoid.

Assembly

Assemble solenoid in reverse order of disassembly. Check pinion clearance as instructed on page 24.

Brush Assembly

Removal - 8430 Tractor (Early and Late)

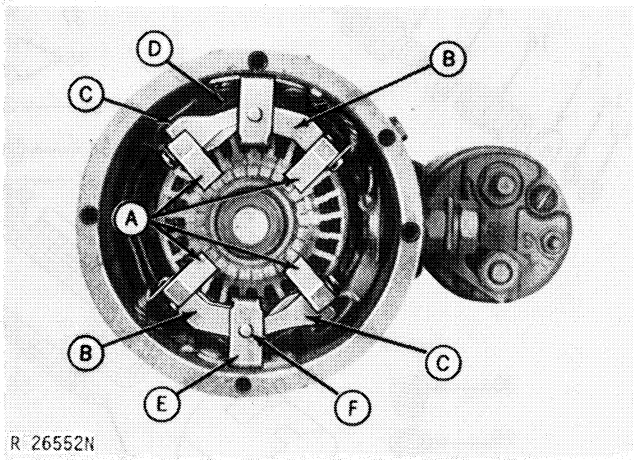

A—Brushes
B—Grounded Brush Holders
C—Insulated Brush Holders
D—Brush Springs
E—Support
F—Pin

Fig. 26-Brush Assembly

1—Chalk a reference mark across nose housing, shift lever housing, main frame, and commutator end frame for proper reassembly.

2—Remove two thru bolts (early tractors) or four cap screws (later tractors) from commutator end frame.

3—Remove commutator end frame. Pry with screwdriver if necessary.

4—Inspect brushes (A, Fig. 26) closely. Make sure brush holders (B and C) are clean and are not binding. Full width of brush should contact commutator.

Replace brushes if they are oil soaked or are worn to less than 1/2 inch (12 mm) in length.

5—Inspect brush springs (D). Replace springs if they are distorted, discolored, or weak. Check each brush holder with your finger to be sure springs are holding brushes tight against commutator.

6—To remove brushes, slide brush holder pin (F) out of support (E). Remove tapping screws which attach brushes to holders.

7—When installing brushes, turn longer side toward armature windings. Make sure full width of each brush contacts commutator and brush holders are not binding.

8—Reinstall commutator end frame in same position as before. Tighten thru bolts or cap screws evenly.

Brush Assembly

8630 Tractor

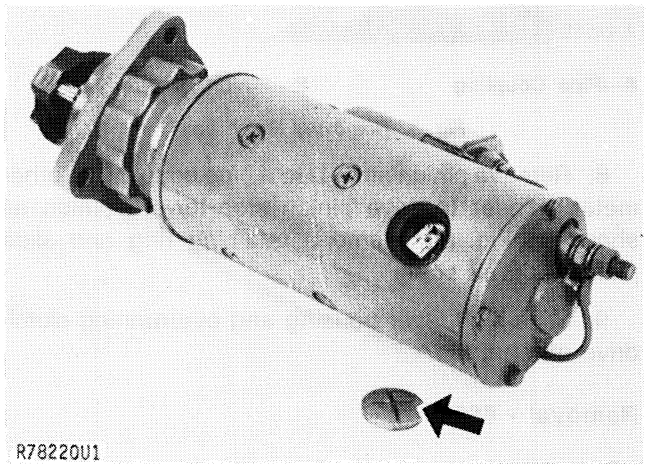

Fig. 27-Field Brush Cover Plug

1. Remove field brush cover plugs. Remove screws from field winding leads.

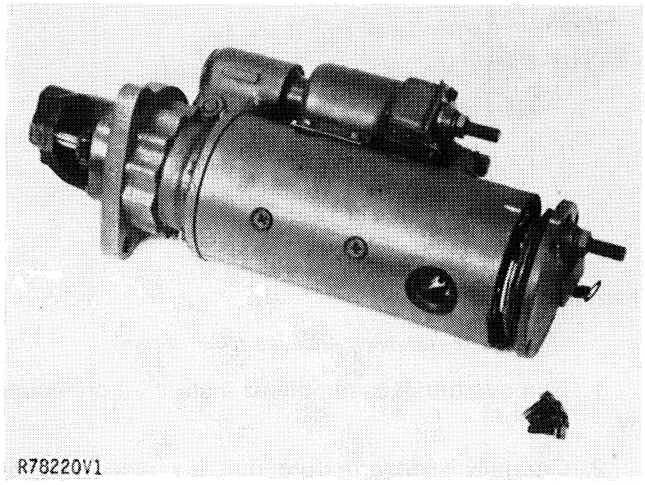

Fig. 28-End Frame

2. Scribe a reference mark across end frame and main frame for reassembly. Remove four bolts, and pry end frame away from main frame. Carefully slide brush assembly away from commutator.

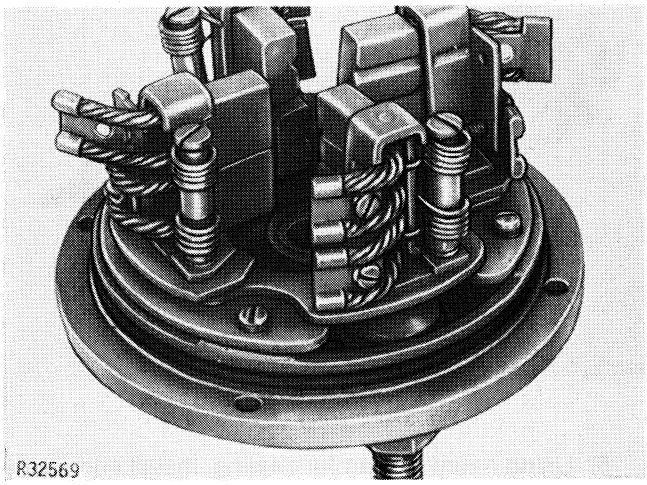

Fig. 29-Brush Assembly

3. Inspect brush assembly. Replace brushes if they are oil soaked or are worn shorter than 1/2 inch (12 mm). Assemble as shown in Fig. 29.

Check each brush spring to be sure it holds brush tightly against commutator. Replace springs if they are distorted or weak.

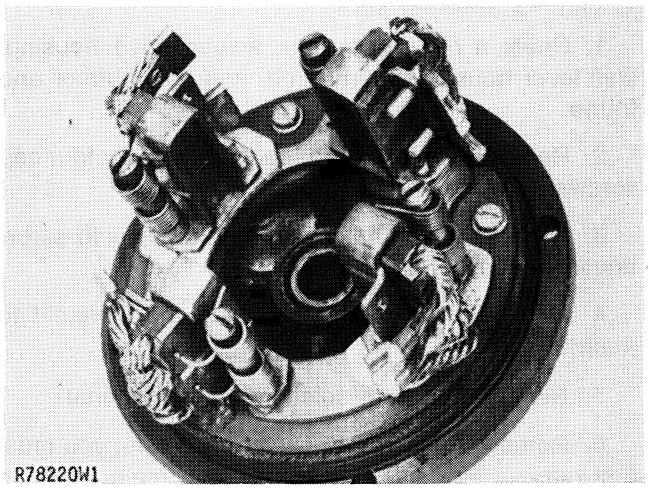

Fig. 30-Holding Brushes Back

4. Push each brush back far enough to set brush spring against side of brush, holding it back. Slide armature out about two inches (50 mm). Slip brush assembly over armature shaft, and push brushes down against commutator. Make sure no brushes hang up.

Brush Assembly—Continued

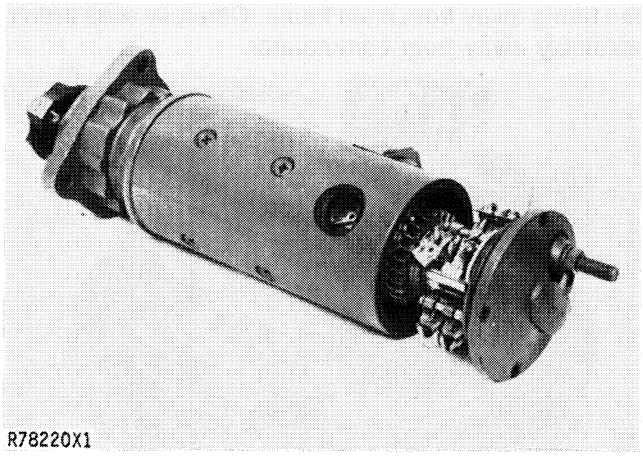

Fig. 31-Installing End Frame

5. Using a new O-ring for sealing, install end frame in its original position. Field winding leads must align with holes in brush assembly, and ground connector must be to top of starter.

Armature

Removal - 8430 (Early and Late)

To remove armature, starting motor must be almost completely disassembled.

1. Chalk a reference mark across drive housing, shift lever housing, main frame, and commutator end frame.

2. Remove two thru bolts (early tractors) or four cap screws (later tractors).

3. Remove commutator end frame. Pry with screw driver if necessary.

4. Remove four cap screws securing solenoid to main frame.

5. Remove nut from solenoid motor terminal.

6. Remove main frame. On later tractors, you must first remove five cap screws securing main frame to shift lever housing.

7. Remove drive housing attaching screws and drive housing.

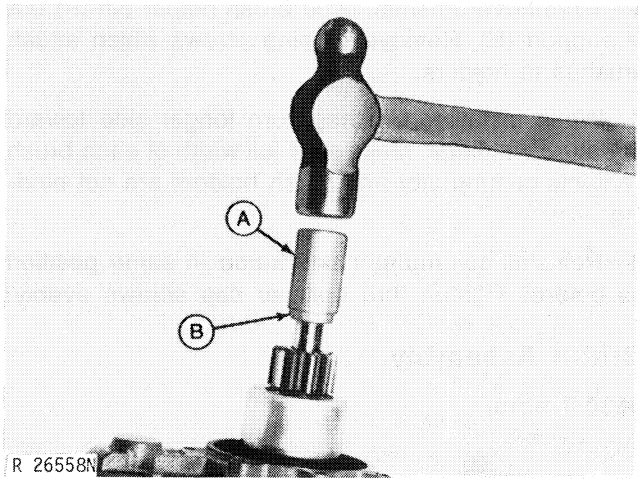

A—Pipe Coupling **B—Pinion Stop**

Fig. 32-Removing Pinion Stop

8. Remove pinion stop. Use a pipe coupling or other metal cylinder to drive pinion stop toward pinion as shown in Fig. 32. Remove retaining ring and slide pinion stop off shaft.

9. Slide shift lever housing and overrunning clutch drive off shaft.

Removal - 8630

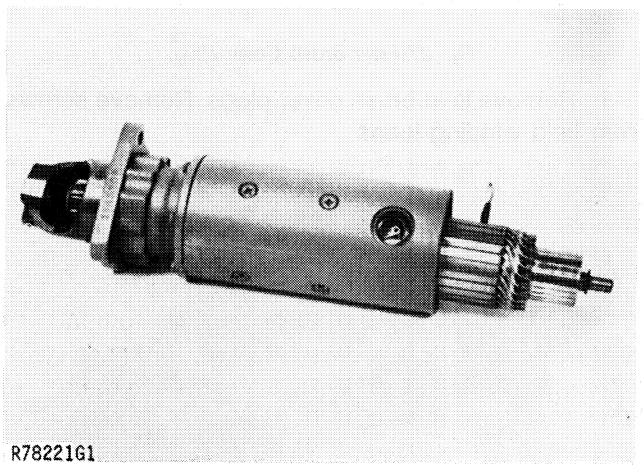

Fig. 32-Removing Armature (8630 shown)

1. Remove brush assembly as instructed previously.

2. Carefully slide armature out. If spacer washer remains in housing, pull it out and install on shaft to prevent misplacing it.

IMPORTANT: Do not clean armature with solvent. Solvent could damage insulation on windings. Use only mineral spirits and a brush.

Give armature a close visual inspection. Look for signs of dragging against pole shoes. Look for scoring under bushings or overrunning clutch drive.

Carefully check commutator. Look for roughness, burned commutator bars, or any material which might cause short circuits between bars.

Clean and touch up commutator if necessary with 00 sandpaper. Never use emery cloth. Clean all dust from armature when finished.

If commutator is out of round, badly burned, or rough, it can be turned down slightly on a lathe. Remove only enough metal to eliminate problem.

Do not undercut commutator after turning as this will cause shorts between commutator bars.

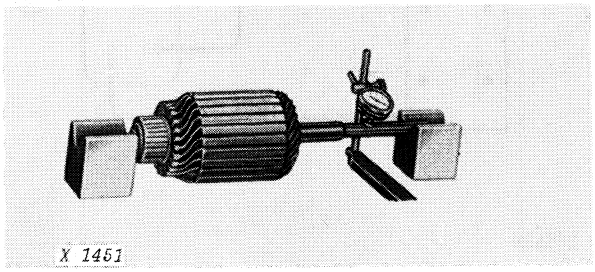

Fig. 34-Checking Armature for Bent Shaft

Place armature in V-blocks and check for a bent shaft as shown in Fig. 34. Replace armature if shaft is bent.

If no-load test indicates possibility of grounded, short circuited, or open circuited windings, check armature for these defects. Windings are large, and defect might be easy to spot.

Grounded Windings

Symptoms — Starting motor cranks engine slowly or not at all. On no-load test, motor has low armature speed and high current draw or fails to operate and has high current draw.

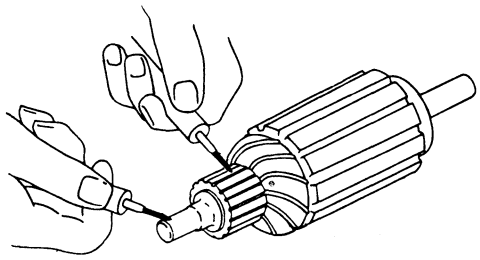

R 26561N

Fig. 35-Checking Armature for Grounded Windings

Use an ohmmeter or test lamp to test for continuity between commutator bars and armature shaft. If test shows continuity, a winding is grounded. If fault cannot be corrected, replace armature.

All armature windings are connected in series, so you need to check only one commutator bar.

Short Circuited Windings

Symptoms — Starting motor cranks engine slowly. On no-load test, motor has low armature speed and high current draw.

Check armature carefully for windings which are bent and touching. Check commutator for anything which could conduct electricity between bars.

If a growler is available, use it to locate short circuit. Follow manufacturer's instructions.

Open Circuited Windings

Symptoms — Starting motor cranks engine slowly. On no-load test, motor has low armature speed and high current draw.

Open circuits are usually due to overheating caused by excessive cranking. Check connections of windings to commutator bars. Also look for burned edges on commutator bars.

Certain growlers are capable of locating open circuits. If one is available, use it according to manufacturer's instructions.

Open circuited windings can sometimes be repaired. Use solder and rosin flux.

Armature—Continued

Assembly - 8430 Tractor (Early and Late)

1. Resaturate oil wicks with medium grade engine oil. Coat armature shaft and bushings with Delco-Remy Lubricant 1960954. Avoid excessive lubrication.

2. Assemble starting motor in reverse order of disassembly. Install pinion stop as shown in Fig. 45. To avoid damage to brush holders, it is best to install main frame with brush assembly dismantled.

3. On early models (Model No. 1113402 or 1113672), install starting motor sealing kit. Be sure all O-rings, gaskets, and seals are in good condition.

Assembly - 8630 Tractor

1. Resaturate oil wicks with medium grade engine oil. Coat armature shaft and bushings lightly with Delco-Remy Lubricant No. 1960954. Avoid excessive lubrication.

2. Carefully slide armature shaft through bushings and overrunning clutch drive. Make sure no washers or seals have slipped out of place.

3. Install brush assembly as instructed on page 15.

Field Windings

Removal - 8430 (Early and Late)

Follow Steps 1-7 for armature removal (page 16). Carefully slide main frame off armature.

Removal - 8630 Tractor

1. Remove brush assembly as instructed on page 15.

2. Remove five bolts securing main frame to shift lever housing. Carefully slide main frame off, pulling solenoid away from plunger and boot.

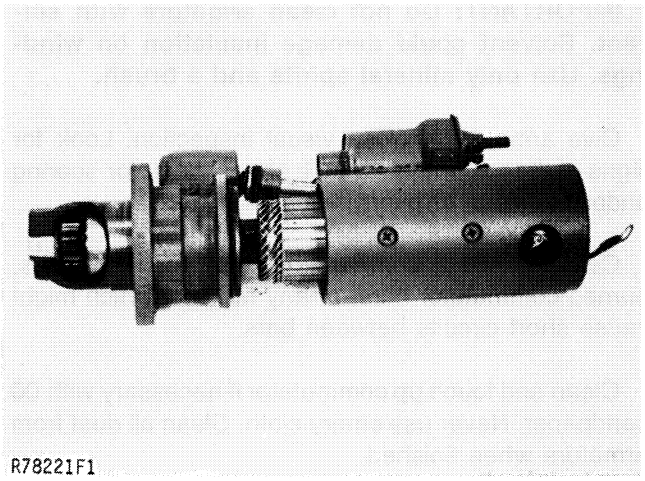

Fig. 36-Removing Field Windings

Testing

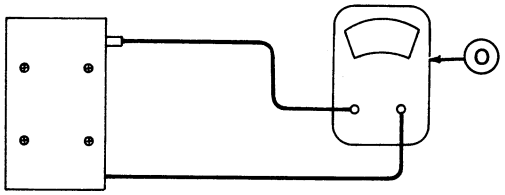

O—Ohmmeter

Fig. 37-Testing Field Windings for Grounds

Use an ohmmeter or test lamp to test for continuity between field terminal and main frame. Be sure brushes are not touching frame.

If test shows continuity, field windings are grounded. Check for worn insulation on wires. Repair or replace windings.

All four field windings are connected in parallel. If starting motor appears weak, test each winding for an open circuit.

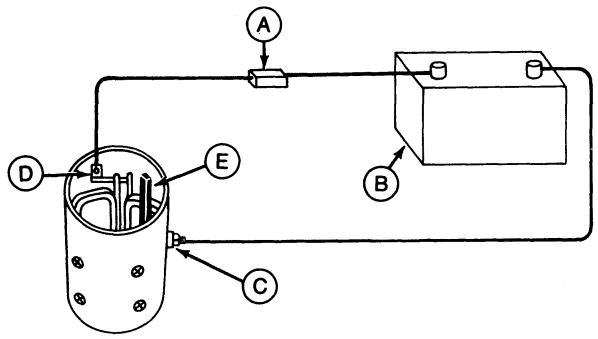

R 26554N

A—1/4-Ohm Resistor
B—12-Volt Battery
C—Field Terminal
D—Insulated Brush Lead
E—Hacksaw Blade

Fig. 38-Testing Field Windings for Open Circuits

Connect a test battery to field terminal and either insulated brush, using a resistor to limit current draw as shown in Fig. 38.

Use a hacksaw blade to test each winding for magnetism. If any winding does not have magnetism, it is open circuited. Repair or replace windings.

NOTE: Because 1/4-ohm resistors capable of carrying several hundred watts are not widely available, a suggested alternative is to connect four 1-ohm resistors in parallel. Each resistor should be rated for at least 150 watts. A carbon pile can also be used. Limit current to 40 to 70 amps.

There is no suitable way to check field windings for short circuits. Winding resistance is too low to permit detection of a short circuit. If starting motor appears weak and no other cause can be found, replace field windings.

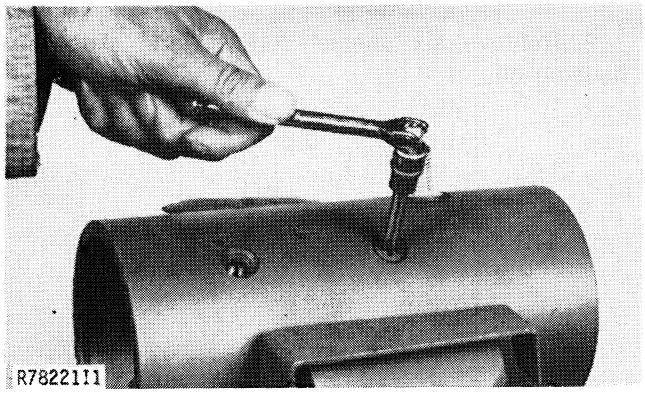

Fig. 39-Removing Pole Shoe Screws

If necessary to remove field windings, use a large screwdriver bit and socket wrench on pole shoe screws.

Take care to prevent distortion of main frame. Do not squeeze sides in vise or strike with hammer. If you must use an impact screwdriver to loosen screws, support each pole shoe individually, using a pole shoe spreader or the nose of an anvil.

Handle windings very carefully. They are easily damaged, causing shorts, opens, or grounds.

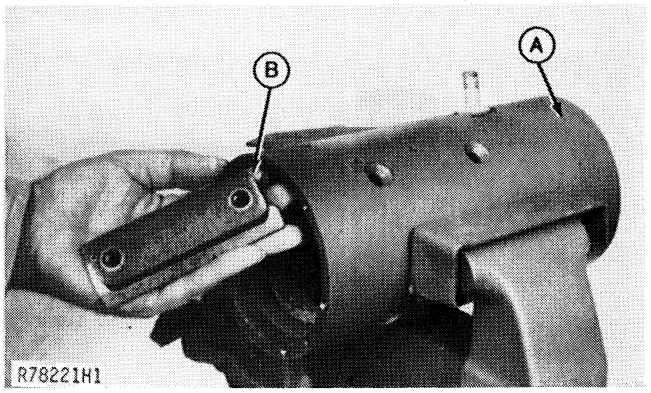

A—Front of Starter **B—Notched End of Pole Shoe**

Fig. 40-Installing Pole Shoes

When replacing pole shoes, position notched end toward front of starter.

Tighten pole shoe screws as tight as reasonably possible. Use a center punch to lightly stake one edge of each screw.

After installing main frame on shift lever housing, install brush assembly as instructed on page 14 and 15.

On 8430 tractors, to avoid damaging brush holders, it is best to install main frame with brush assembly dismantled.

Overrunning Clutch Drive

Pinion should turn freely and smoothly in the overrunning direction only.

Removal - Early 8430 Tractor

1. Chalk a reference mark across drive housing and shift lever housing for proper reassembly.

2. Remove two thru bolts.

3. Remove four cap screws securing solenoid to main frame. Remove nut from solenoid motor terminal.

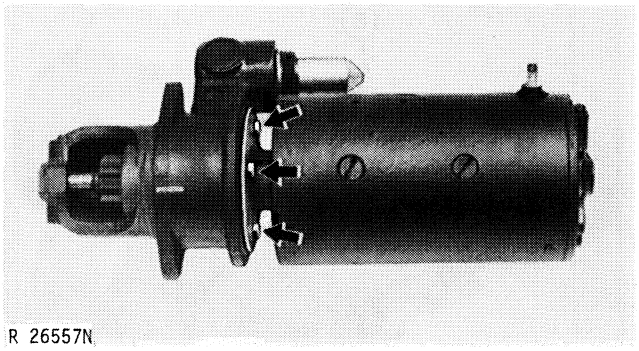

Fig. 41-Drive Housing Attaching Screws

4. Separate shift lever housing from main frame just far enough to remove four drive housing attaching screws (Fig. 41). Do not slide armature out of brush assembly at other end of shaft.

5. Remove drive housing.

6. Remove pinion stop (Fig. 32). Remove retaining ring and slide pinion stop off shaft.

7. Carefully slide shift lever housing and overrunning clutch drive off shaft. Do not slide armature out of brush assembly at other end of shaft.

Removal - Late 8430 Tractor

1. Chalk a reference mark across drive housing, shift lever housing, and main frame for proper reassembly.

2. Remove six special screws securing drive housing to shift lever housing.

3. Remove drive housing.

4. Remove pinion stop (Fig. 32). Remove retaining ring and slide pinion stop off shaft.

5. Remove five cap screws securing drive housing to main frame.

6. Remove four cap screws securing solenoid to main frame.

7. Remove nut from solenoid motor terminal.

8. Carefully slide shift lever housing and overrunning clutch drive off shaft. Do not slide armature out of brush assembly at other end of shaft.

Removal - 8630 Tractor

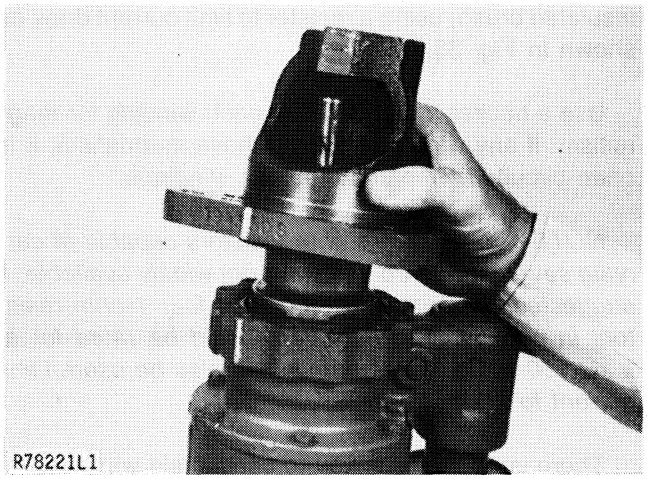

Fig. 42-Removing Drive Housing

1. Scribe a reference mark across drive housing and shift lever housing for proper reassembly.

2. Remove six special screws, and slide drive housing off.

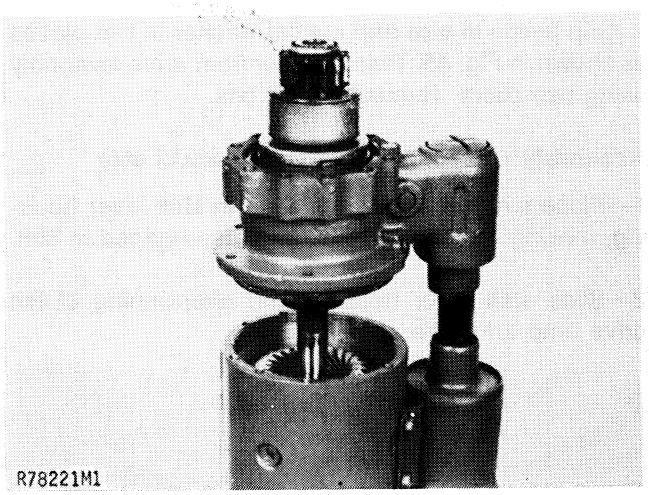

Fig. 43-Removing Shift Lever Housing

3. Remove five bolts, and separate shift lever housing from main frame. Pull solenoid plunger and boot away from solenoid.

4. Remove overrunning clutch drive from shift lever housing.

Repair

Inspect overrunning clutch drive for signs of overheating, caused by keeping switch engaged too long after engine starts.

If drive has been damaged, check armature shaft closely. Replace armature if you find any damage to shaft.

IMPORTANT: Do not clean overrunning clutch drive with solvent. Solvent would dissolve lubricant in clutch mechanism. Clean only by wiping with a clean cloth. Do not lubricate drive.

On 8430 Tractor, overrunning clutch drive is not serviceable, except to replace bushing in early model. Install new drive if old one is defective.

On 8640 Tractor, you can replace pinion, spring, or spring cup. To do so, cut pinion stop cup at split of pinion stop (split washer).

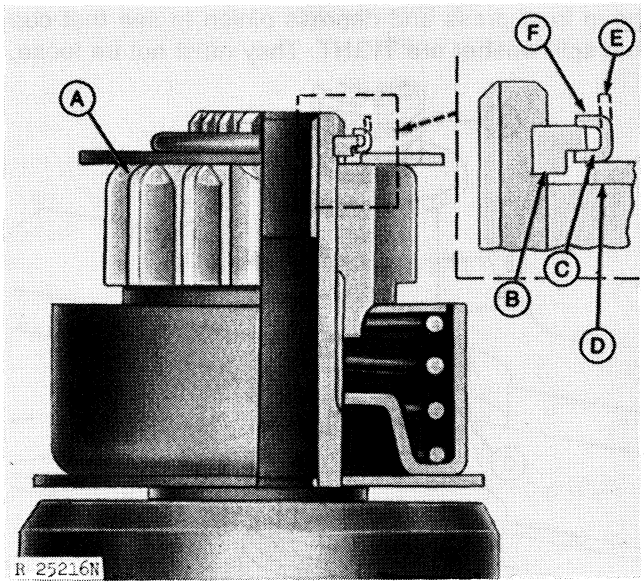

A—Pinion
B—Split Washer
C—Pinion Stop Cup
D—Flat Washer
E—Before Crimping
F—After Crimping

Fig. 44-Flat Washer Between Pinion and Pinion Stop Cup (Shown After Crimping)

Use an AR48344 Drive Washer Kit when assembling the drive. Depress pinion and assemble flat washer (to be discarded after assembly), pinion cup, and split washer or pinion stop, as shown in Fig. 44. Grip pinion in vise (pad the jaws) and start crimping by bending cup inward toward the shaft around entire cup circumference.

Repair—Continued

Support pinion in press as shown in Fig. 45. Use a 1-inch pipe coupling to finish crimping the cup. Remove from press and depress pinion to see that cup and split washer are TIGHT. They must not be loose.

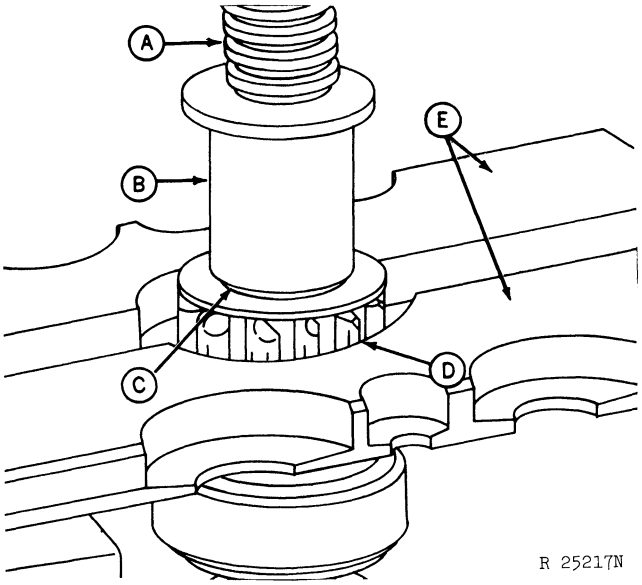

A—Arbor Press
B—1" Pipe Coupling
C—Pinion Stop Cup
D—Support Pinion Under Teeth
E—Support Plates

Fig. 45-Crimping Pinion Stop Cup

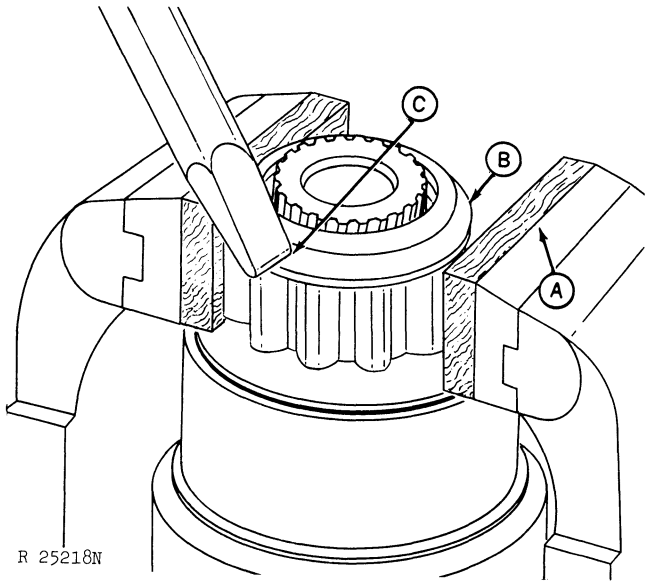

A—Pad Vise Jaws
B—Flat Washer
C—Midway Between Two Pinion Teeth

Fig. 46-Removing Flat Washer After Crimping

Grip pinion in vise and cut flat washer in two places as shown in Fig. 45. Twist washer from drive assembly using two pliers. Remove metal bits.

Assembly - 8430 Tractors (Early and Late)

1—Place overrunning clutch drive in shift lever housing, making certain that shift lever is engaged in slot.

2—Slide shift lever housing and overrunning clutch drive onto armature shaft.

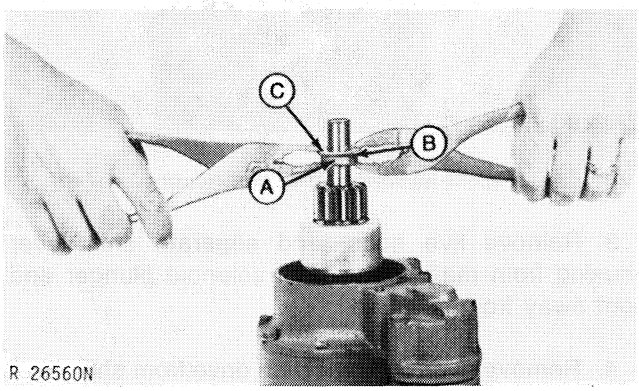

A—Pinion Stop
B—Retaining Ring
C—Washer (Remove After Using)

Fig. 47-Installing Pinion Stop

3—Slide pinion stop onto shaft, with open side toward end of shaft. Install retaining ring in groove. Force pinion stop over ring, using a washer and two pairs of pliers as shown in Fig. 47. Remove washer.

4—Install shift lever housing and drive housing.

Assembly - 8630 Tractor

1. Place overrunning clutch drive in shift lever housing, with shift lever engaged in slot.

2. Make sure no washers or seals have slipped out of place, and install shift lever housing on main frame.

3. Install drive housing in its original position. Tighten six special screws very securely. Place the one short screw next to shift lever.

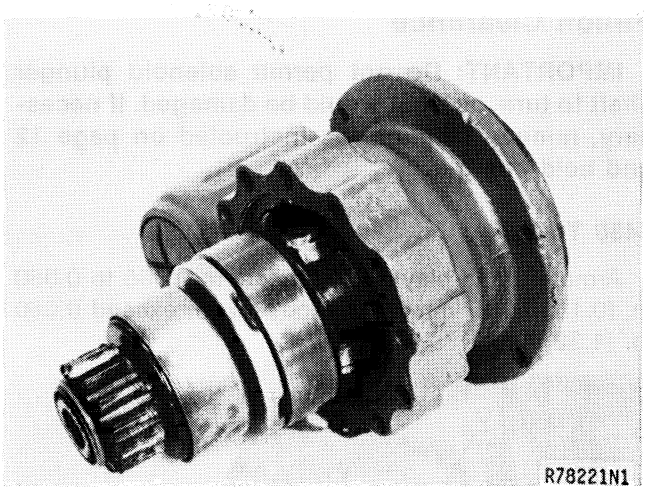

Fig. 48-Replacing Overrunning Clutch Drive

Wick-Lubricated Bushings

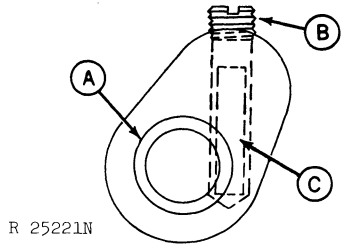

A—Bushing **C—Wick**
B—Plug

Fig. 49-Wick-Lubricated Bushings

Replace bushings if worn larger than the wear tolerances shown below. Overrunning clutch drive bushings are not replaceable, so entire drive must be replaced if bushings are worn.

1. Remove plug (B, Fig. 49) and wick (C).

2. Press out old bushing. Press new bushing in to same depth as old bushing. Use bushing drivers listed below.

3. Use a drill the same size as oil wick hole, and drill bushing.

4. Only if necessary, carefully ream bushing to size.

5. Saturate new wick with SAE 10 engine oil. Install wick and plug.

Bushing Specifications

Starter Model 1113402 or 1113672 (8430 Tractors):

Bushing, Overrunning Clutch

I.D. ..... 0.562 to 0.563 in. (14.28 to 14.30 mm)
Wear tolerance ..... 0.574 in. (14.58 mm)

Bushing, Nose Housing

I.D. ..... 0.562 to 0.564 in. (14.28 to 14.33 mm)
Wear tolerance ..... 0.574 in. (14.58 mm)
Oil clearance ..... 0.002 to 0.005 in. (0.05 to 0.13 mm)
Wear tolerance ..... 0.017 in. (0.43 mm)

Bushing, Commutator End Frame

I.D. ..... 0.562 to 0.564 in. (14.28 to 14.33 mm)
Wear tolerance ..... 0.573 in. (14.55 mm)
Oil clearance ..... 0.002 to 0.005 in. (0.05 to 0.13 mm)
Wear tolerance ..... 0.016 in. (0.41 mm)

Bushing, Lever Housing

I.D. ..... 0.757 to 0.758 in. (19.23 to 19.25 mm)
Wear tolerance ..... 0.772 in. (19.61 mm)
Oil clearance ..... 0.010 to 0.013 in. (0.25 to 0.33 mm)
Wear tolerance ..... 0.027 in. (0.69 mm)

Starter Model 1114191 (8630 Tractor):

Bushing, Drive Housing

I.D. ..... 0.625 to 0.626 in. (15.88 to 15.90 mm)
Wear tolerance ..... 0.636 in. (16.15 mm)
Oil clearance ..... 0.002 to 0.004 in. (0.051 to 0.102 mm)
Wear tolerance ..... 0.636 in. (16.15 mm)

Bushings—Continued

Bushing, Commutator End Frame

I.D. ..... 0.562 to 0.563 in. (14.28 to 14.30 mm)
Wear tolerance ..... 0.573 in. (14.55 mm)
Oil clearance ..... 0.002 to 0.004 in. (0.051 to 0.102 mm)
Wear tolerance ..... 0.015 in. (0.381 mm)

Bushing, Lever Housing

I.D. ..... 0.843 to 0.844 in. (21.41 to 21.44 mm)
Wear tolerance ..... 0.850 in. (21.59 mm)
Oil clearance ..... 0.019 to 0.021 in. (0.483 to 0.533 mm)
Wear tolerance ..... 0.027 in. (0.686 mm)

Overrunning clutch bushing for 8430 Tractor is quite easily damaged.

Use the following disks from Bushing Driver Set No. D-01045AA.

	Pilot Disk	Drive Disk
8430 Tractor:		
Lever Housing Bushing	27494	27497
Commutator End Frame Bushing	27491	27494
Drive Housing Bushing	27491	27495
8630 Tractor:		
Drive Housing Bushing	27492	27494
Commutator Bushing	27491	27495
Lever Housing Bushing	27496	27498

Pinion Clearance

IMPORTANT: Do not permit solenoid plunger shaft to turn, as boot would be damaged. If necessary, remove solenoid as instructed on page 12 and hold plunger.

8430 Tractor

Armature end play should measure 0.005 to 0.050 in. (0.13 to 1.27 mm) and should never exceed 0.060 in. (1.52 mm).

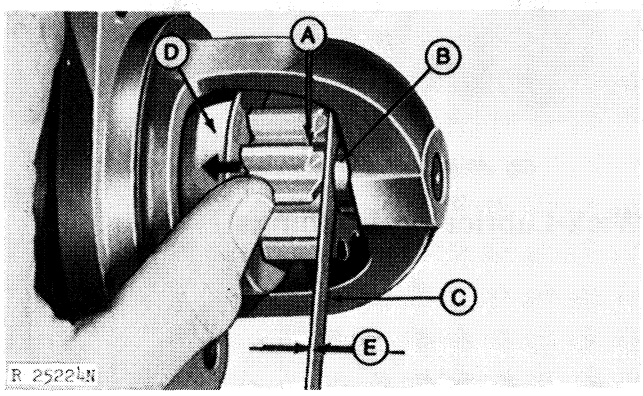

A—Pinion
B—Pinion Stop
C—Feeler Gauge
D—Press on Clutch to Take up Movement
E—0.010 to 0.140 in. (0.25 to 3.56 mm) Clearance

Fig. 50-Checking Pinion Clearance

Before installing starter, check pinion clearance as follows:

1. Disconnect field coil from solenoid motor terminal.

2. Connect a 12-volt battery to the solenoid frame and "S" terminal.

3. Momentarily connect a jumper wire between solenoid frame and motor terminal to pull solenoid plunger in.

4. Press clutch toward commutator and measure clearance.

5. Clearance between pinion (A, Fig. 50) and pinion stop (B) should be 0.010 to 0.140 (0.25 to 3.56 mm).

Pinion clearance is adjustable only on later motors (Model No. 1113391). Adjust self-locking Nut (26, Fig. 20) on solenoid plunger.

8630 Tractor

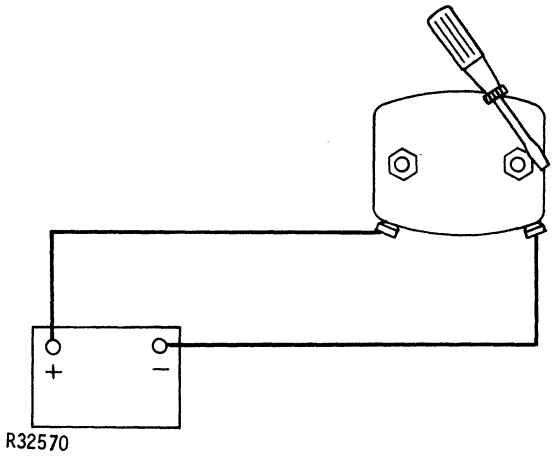

Fig. 51-Hold-In Winding Connections

Before installing starter, check pinion clearance as follows:

1. Disconnect solenoid ground wire. Connect a 12-volt battery to solenoid "SW" and ground terminals.

2. Briefly touch a screwdriver blade across motor and ground terminals to pull solenoid plunger in.

3. Push pinion back toward armature (D, Fig. 51), and measure clearance (E). Release hold-in winding.

4. If pinion clearance is not 0.328 to 0.391 inch (8.33 to 9.92 mm), turn self-locking nut (B) to adjust clearance. Recheck clearance after adjusting.

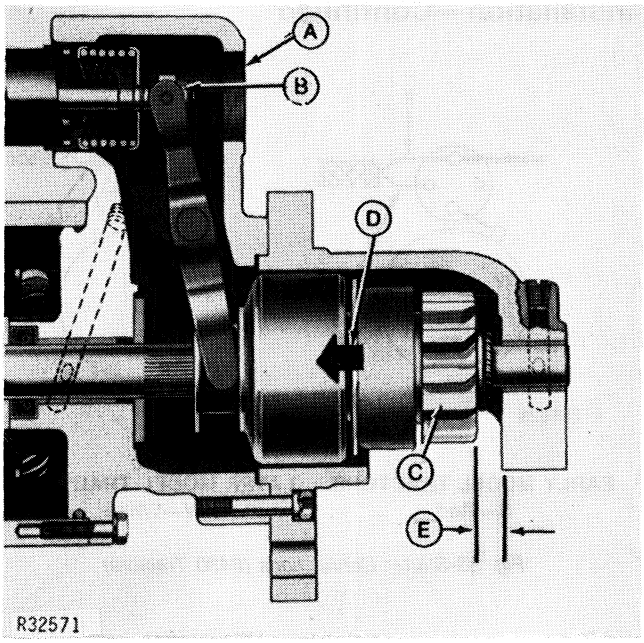

A—Plug Removed
B—Self-Locking Nut (Turn to Adjust Clearance)
C—Pinion
D—Press on Clutch to Take up Movement
E—0.328 to 0.391 in. (8.33 to 9.92 mm) Clearance

Fig. 52-Checking Pinion Clearance

Installation

Prior to installation, perform a no-load test as described on page 7 to make sure repairs have been successful.

Install starter on tractor.

Connect positive battery cable, wiring harness, and starter ground cable. (See Fig. 53 or 54.)

Installation—Continued

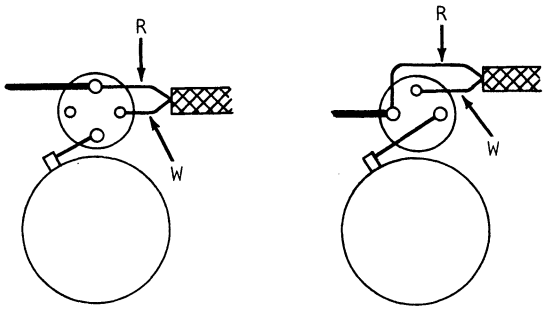

EARLY MODEL TRACTORS
R—Red

LATER MODEL TRACTORS
W—White

Fig. 53-Starter Connections (8430 Tractors)

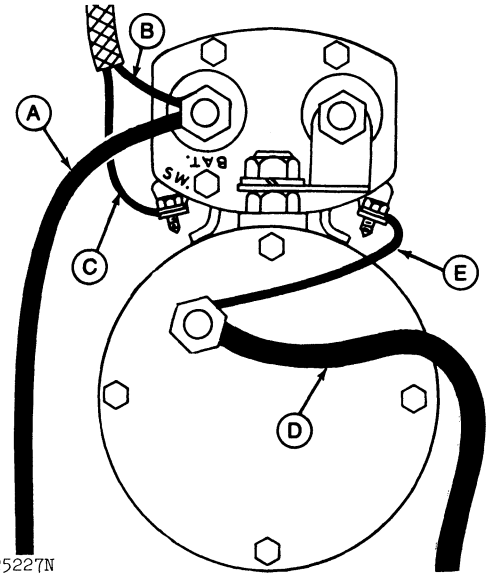

A—Positive Starter Cable
B—Red
C—White
D—Starter Ground Cable
E—Solenoid Ground Wire

Fig. 54-Starter Connections (8630 Tractor)

Group 30
JOHN DEERE STARTING CIRCUIT

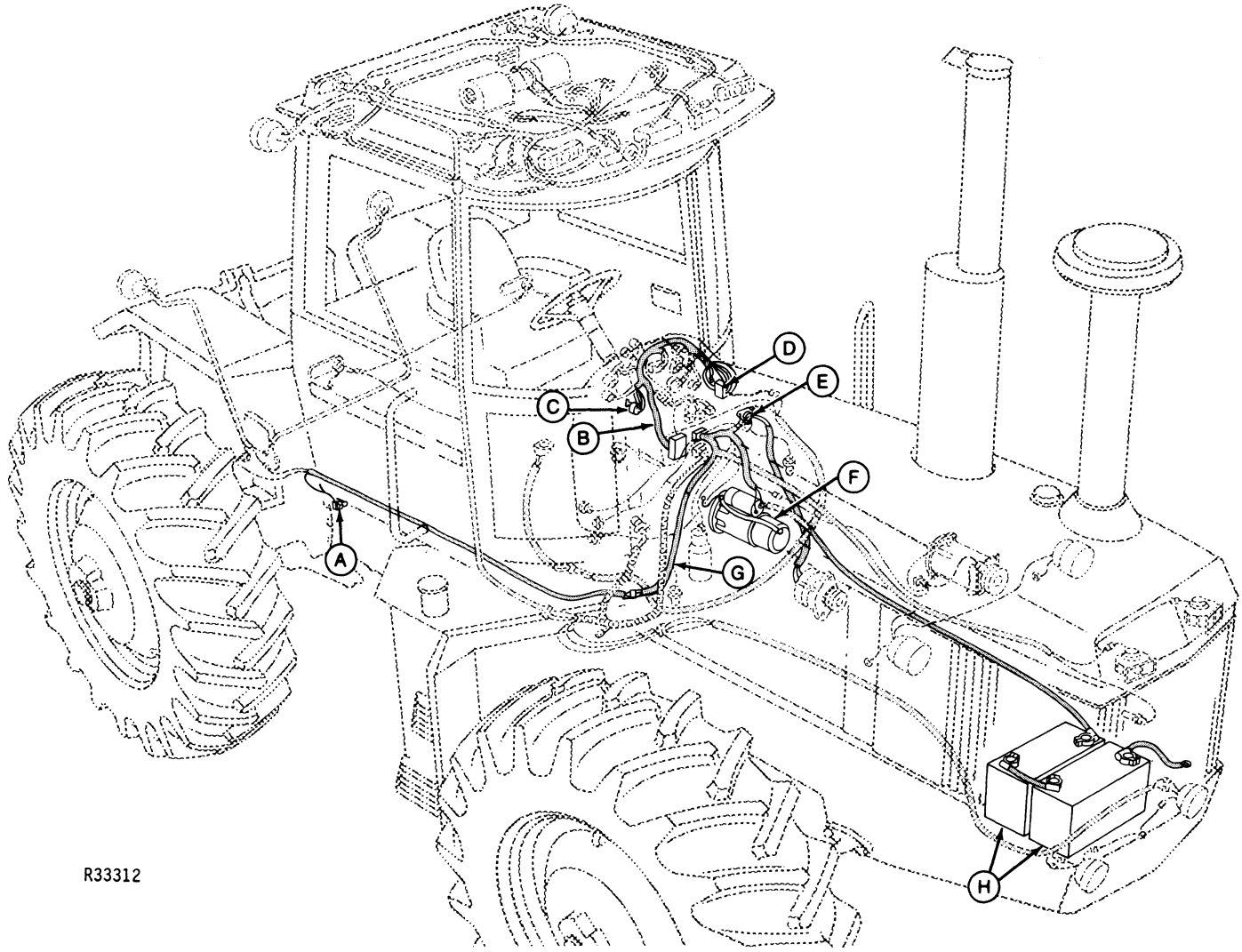

A—Neutral Start Switch
B—Instrument Harness
C—Key Switch
D—Circuit Breakers
E—Starter Circuit Relay
F—Starter
G—Engine Harness
H—Batteries

Fig. 1-Starting Circuit Components

GENERAL INFORMATION

NOTE: 8630 Tractor uses larger starter than 8430 Tractor. Also, tractor may have either John Deere or Delco-Remy starter. See Group 25 for Delco-Remy Starting Circuit.

IMPORTANT: Never operate starting motor longer than 30 seconds. Allow at least two minutes for cooling and battery recovery before operating again. Overheating, caused by excessive operation, will seriously damage starting motor.

HOW THE SYSTEM WORKS

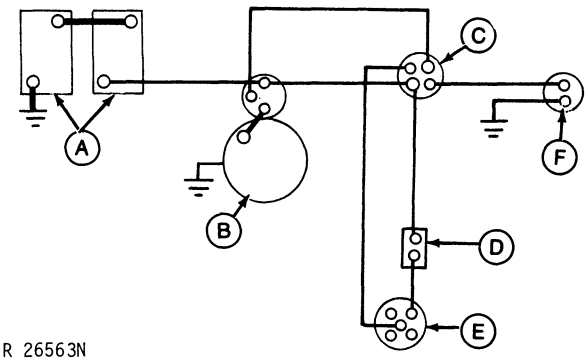

R 26563N

A—Batteries
B—Starting Motor
C—Starter Circuit Relay
D—10-Amp Circuit Breaker
E—Key Switch
F—Neutral Start Switch

Fig. 2-Starting Circuit

Fig. 2 shows components of starting circuit. Wiring is contained in engine and instrument harnesses. For additional wiring diagrams, see Group 5.

Current flows from batteries (A, Fig. 2) by way of starter (B) and starter circuit relay (C) to electrical load center. Unless circuit breaker (D) is tripped, current flows on to BAT terminal of key switch (E).

When key switch is in start position, current flows to small upper terminal of starter circuit relay. If transmission is in neutral, current flows through neutral start switch (F) to ground, closing relay.

When starter circuit relay closes, it provides continuity between large terminals. Current flows to switch terminal of starter solenoid, engaging starter.

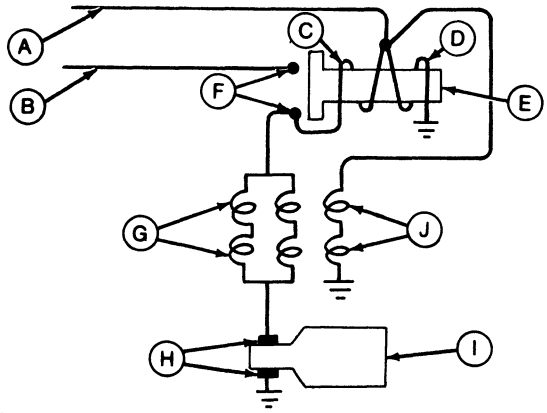

RG1313

A—Wire from Relay
B—Cable from Battery
C—Pull-In Winding
D—Hold-In Winding
E—Solenoid Plunger
F—Main Contacts
G—Field Windings
H—Commutator Brushes
I —Armature
J —Shunt Windings

Fig. 3-Circuitry Inside Starter

When wire from relay (A, Fig. 3) is energized, current flows through both pull-in winding (C) and hold-in winding (D) to ground.

Current through windings engages solenoid plunger (E), which closes main contacts (F). When main contacts close, both ends of pull-in winding have same voltage, so current through pull-in winding stops. Current continues through hold-in winding, keeping solenoid engaged and main contacts closed.

With main contacts closed, current flows from battery cable (B) to starting motor at a very high rate. Four heavy field windings (G) carry current to commutator brushes (H).

Light shunt windings (J) are wrapped together with two of the heavy field windings. Shunt windings are connected to solenoid switch terminal and directly to ground. They prevent overspeeding of motor, and assist in pinion engagement with ring gear.

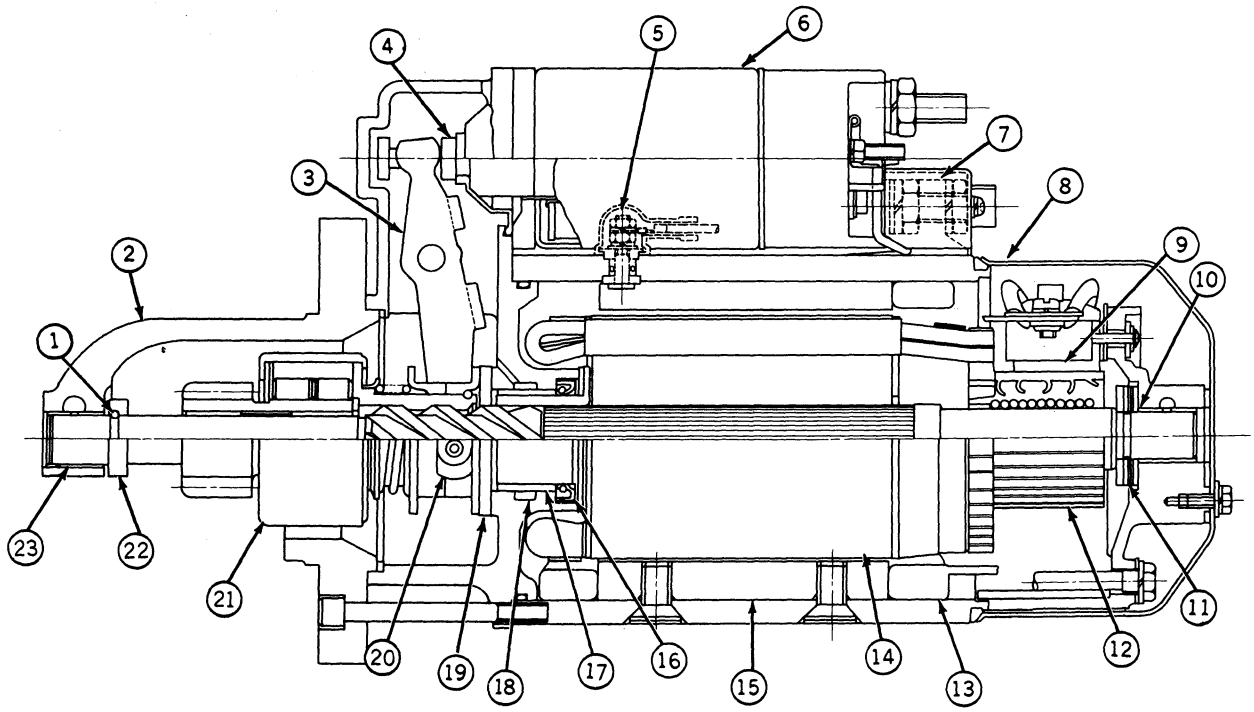

R 25228N

1—Snap Ring
2—Drive End Housing
3—Shift Lever
4—Plunger
5—Shunt Field Terminal
6—Solenoid Assembly
7—Field Connector
8—End Frame Cover
9—Brush
10—Bushing
11—Thrust Washers
12—Commutator
13—Field Windings
14—Armature
15—Pole Shoe
16—Oil Seal
17—Bushing
18—Felt
19—Brake Washer
20—Wear Pads
21—Overrunning Clutch
22—Pinion Stop
23—Bushing

Fig. 4-Starter

From field windings, current flows through armature windings (I) to ground, making contact through commutator brushes (H).

Strong magnetic fields are set up by current flow through field windings and armature windings. Windings are arranged so that magnetic fields constantly repel each other, rotating armature.

When solenoid engages, it pulls shift lever (3, Fig. 4). Shift lever pushes overrunning clutch drive (21) to engage pinion in starter gear on flywheel. As armature turns, it cranks engine.

When engine starts, overrunning clutch spins freely on shaft. This prevents overspeeding of armature by flywheel.

When key switch is released, current to solenoid hold-in winding is shut off. Current can feed through both pull-in and hold-in windings from main contacts, but direction of current is reversed in pull-in winding. The two windings cancel each other, and solenoid is released.

A spring pushes solenoid back to disengaged position. This opens main contacts and shuts off current to field windings and armature.

Shift lever retracts overrunning clutch drive, disengaging pinion from flywheel. Brake washer (19) slows armature to a stop.

NOTE: See Group 10 for all diagnosis of electrical system.

STARTER REMOVAL

1. Inspect starting motor for obvious defects before removing it. Check for loose mounting bolts or pole shoe retaining screws. Operate starting motor and listen for rattling, squealing, or grinding.

2. Disconnect battery ground cable.

3. Disconnect cable and wires from solenoid.

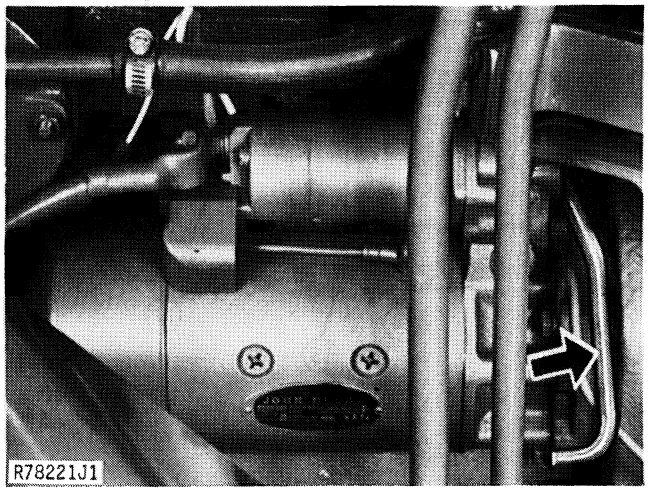

Fig. 1-Using JDE-80 Starter Wrench

4. Remove mounting bolts. On 8430 Tractor, use JDE-80 Starter Wrench to reach bolt behind starting motor.

TESTS BEFORE DISASSEMBLY

Observe starting motor carefully before beginning disassembly. Problem may be readily apparent, making repair much easier.

Solenoid

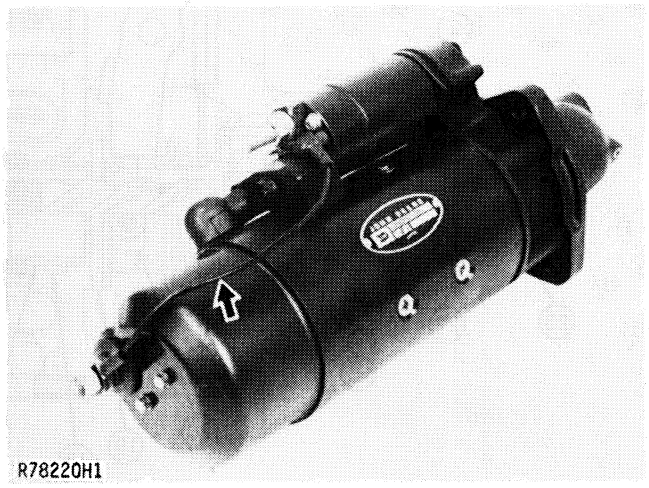

Fig. 2-Solenoid Ground Wire (8630 Tractor Only)

1. On starter for 8630 Tractor, be sure solenoid ground wire is connected to starter frame.

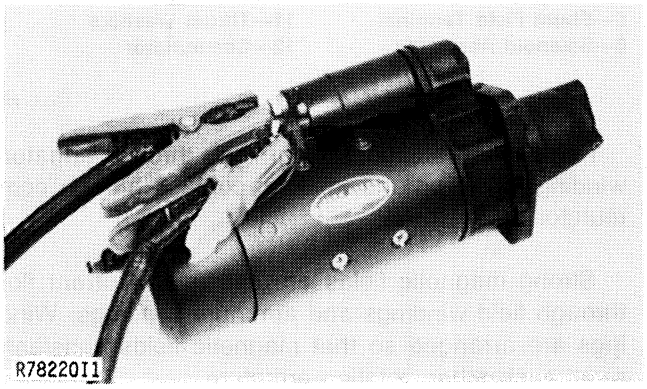

Fig. 3-Jumper Cable Connections

2. Remove plastic cover from motor terminal, and connect a 12-volt battery to solenoid with heavy-duty jumper cables. Connect battery (upper) terminal on solenoid to positive battery terminal and motor (lower) terminal to negative battery terminal.

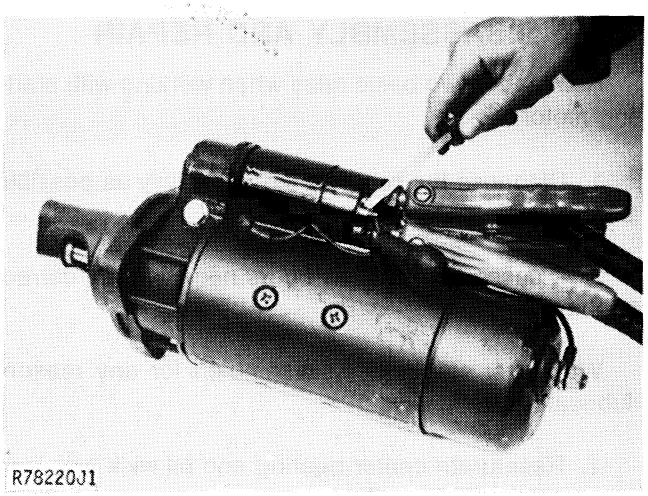

Fig. 4-Testing Solenoid

IMPORTANT: Do not engage solenoid longer than 1 to 2 seconds, because closing solenoid switch provides a dead short across battery.

3. Use a screwdriver blade to short across from battery terminal to switch terminal as shown in Fig. 4. Solenoid should engage, pushing overrunning clutch drive to engaged position. When screwdriver is removed, solenoid should return sharply to disengaged position.

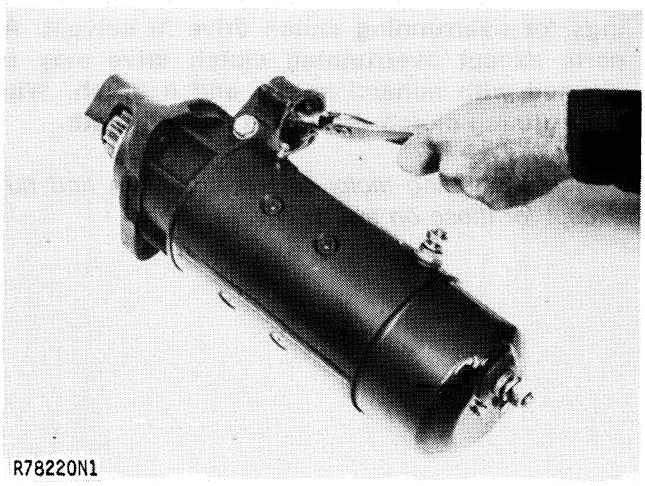

Fig. 5-Manually Moving Shift Lever

Solenoid should engage at voltages down to 8 volts. If it does not engage, remove solenoid and manually move shift lever back and forth. If lever moves smoothly, pull-in winding is defective and solenoid must be replaced. If not, disassemble and repair starter.

If solenoid engages, but then chatters instead of staying firmly engaged, hold-in winding is defective and solenoid must be replaced. (On starter for 8630 Tractor, be sure solenoid ground wire is connected to starter frame.)

If shift lever or overrunning clutch drive appears to bind, disassemble and repair starter.

Overrunning Clutch Drive

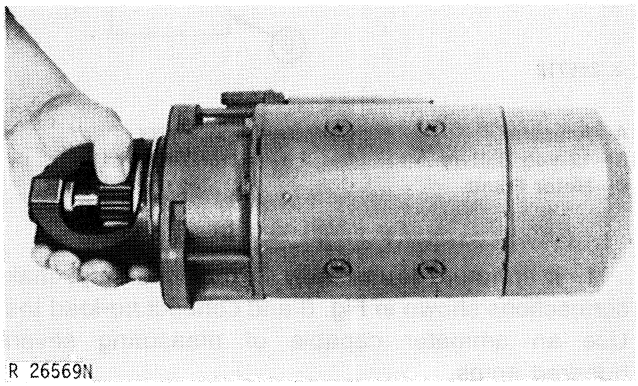

Fig. 6-Turning Overrunning Clutch Drive by Hand

Turn overrunning clutch drive by hand. It should turn freely on shaft in overrunning direction only.

Armature

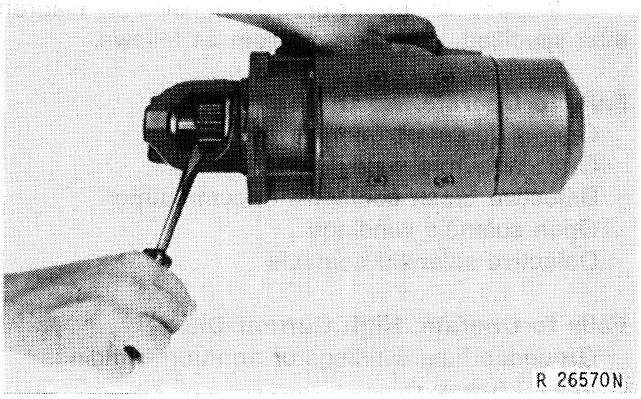

Fig. 7-Turning Armature by Hand

Turn armature by prying against pinion with screwdriver. Check for dragging armature, seized bushings, or bent shaft.

If you discover any interference, disassemble and repair starting motor. See instructions on following pages. Do not conduct no-load test unless armature turns freely.

No-Load Test

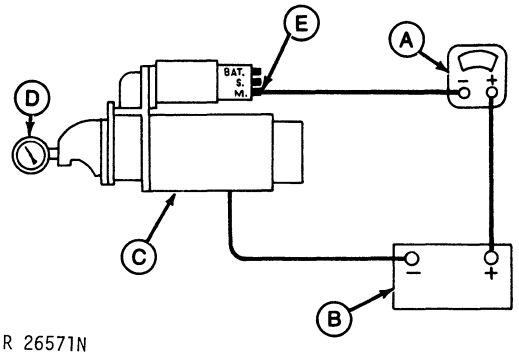

R 26571N

A—Ammeter
B—12-Volt Battery
C—Motor Frame
D—Tachometer
E—Motor Terminal

Fig. 8-No-Load Test

1. If armature turns freely in previous step, make connections shown in Fig. 8 and conduct no-load test. Use an ammeter capable of measuring several hundred amps.

Current draw should be approximately 90 to 140 amps at 12 volts. Armature speed should be approximately 4000 to 5000 rpm.

2. If speed and current draw are slightly low, connect a voltmeter between motor terminal and motor frame. Observe voltage during test. Voltage may be reduced because of high current draw on battery.

3. If speed or current draw is significantly different than specified, diagnose problem as follows.

Fails to Operate, No Current Draw
Open field circuit (all field windings)
Open armature windings
Defective brush contact with commutator
Open solenoid windings
Defective solenoid contacts

Fails to Operate, High Current Draw
Grounded field windings or armature windings
Seized bearings

Low Speed, Low Current Draw
High internal resistance
Defective brush contact with commutator

Low Speed, High Current Draw
Excessive friction
Shorted armature
Grounded armature or field windings

High Speed, High Current Draw
Shorted field windings

DISASSEMBLY AND REPAIR

Remember two basic rules when working with starting motors:

1. Diagnose the problem as thoroughly as possible before beginning disassembly.

2. Disassemble only as far as necessary to correct problem.

Whenever starter is disassembled for any reason, lubricate it as follows.

1. Resaturate center bearing and oil wick with medium grade engine oil.

2. Apply a coat of Bosch VS 10 832 Ft grease* to both end bearings, grease reservoirs for both end bearings, armature shaft except center bearing area, brake washer, both ends of shift lever, and shift lever pivot shaft.

*If specified grease is not available, substitute Esso Beacon 325 or Delco-Remy Lubricant No. 1960954.

3. Avoid excessive lubrication.

IMPORTANT: Never clean armature, field windings, or overrunning clutch drive in solvent. All parts except overrunning clutch drive may be cleaned with mineral spirits and a brush. Wipe overrunning clutch drive with a clean cloth.

NOTE: Starting motor has metric bolts and nuts except for those on switch cover.

Brush Assembly

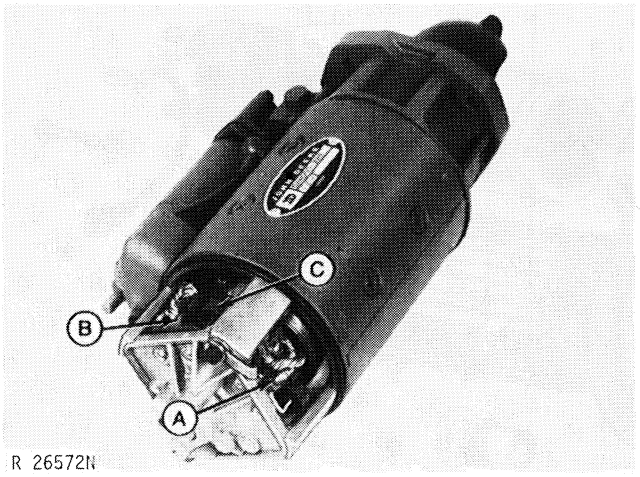

A—Grounded Brushes **C—Brush Spring**
B—Insulated Brushes

Fig. 9-Brush Assembly

1. Remove end frame cover.

2. Inspect brushes (A and B, Fig. 9) closely. Make sure brushes are not binding in holders. Full width of each brush should contact commutator.

3. Replace brushes if they are oil soaked or worn to less than 5/8 inch (16 mm) in length.

4. Check each brush spring (C) to be sure it is holding brush tight against commutator. Replace springs if they are distorted, discolored, or weak.

5. To remove brushes, remove brush lead screws. Pry brush spring out of way, and pull brush out of holder.

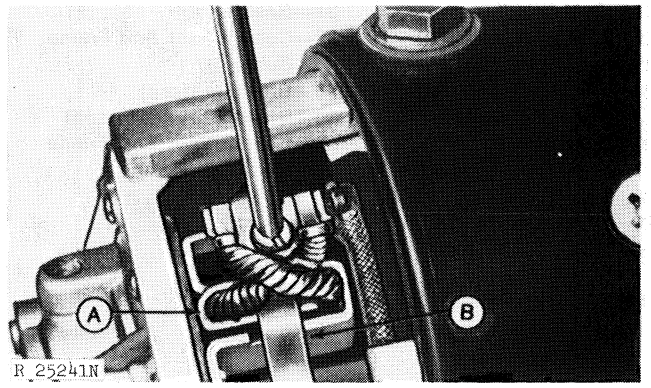

A—Brush **B—Brush Spring**

Fig. 10-Brush Installation

6. When installing brushes, cross brush leads 180° as shown in Fig. 10. On insulated brushes, push leads down tight against brushes to prevent grounding.

Field Windings

Removal

1. Remove terminal cover and field connector. Disconnect shunt winding lead.

2. Remove end frame cover.

3. Remove brush lead screws from two insulated brushes.

4. Remove two cap screws securing end frame to main frame. Remove end frame.

5. Chalk a reference mark across drive housing, shift lever housing, and main frame for proper reassembly.

6. Remove eight special screws securing drive housing and shift lever housing to main frame. Carefully remove main frame.

Testing

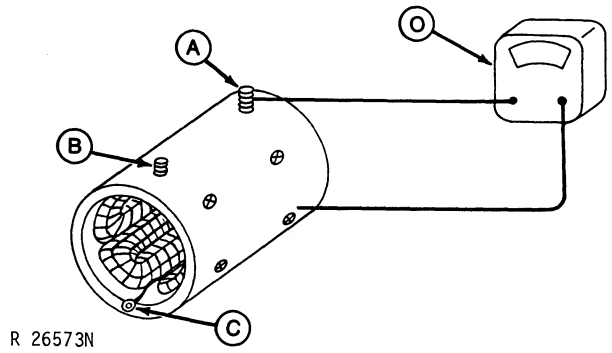

A—Field Terminal **C—Shunt Winding Ground**
B—Shunt Winding Terminal **O—Ohmmeter**

Fig. 11-Testing Field Windings for Grounds

Use an ohmmeter or test lamp to test for continuity between field terminal and main frame as shown in Fig. 11. Be sure brush connectors are not touching frame.

Disconnect shunt winding ground inside main frame. Be sure that wire is not touching frame, and use an ohmmeter or test lamp to test for continuity between shunt winding terminal and frame.

If either test shows continuity, windings are grounded. Check for worn insulation. Repair or replace windings.

Field Windings—Continued

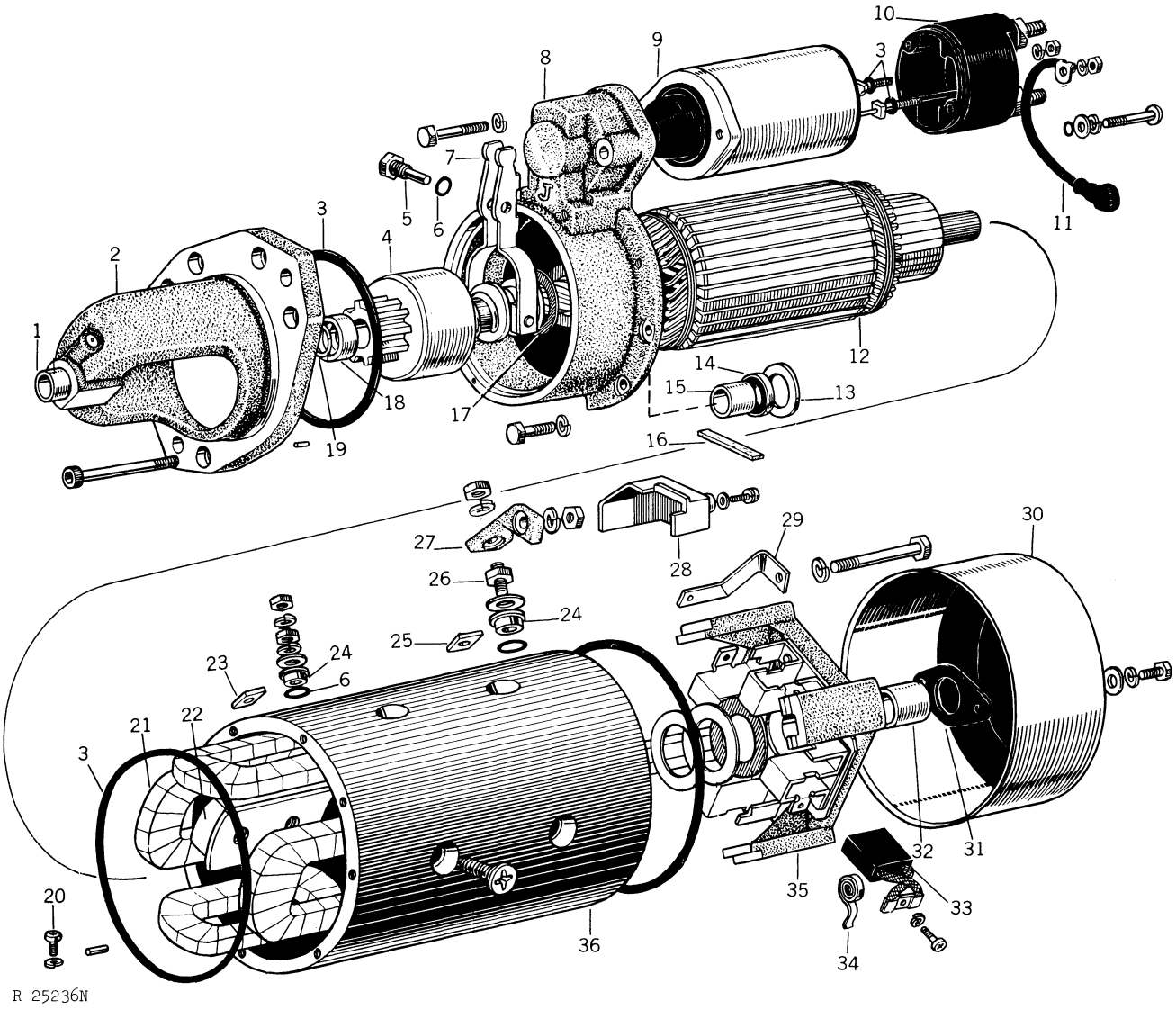

1—Drive End Bushing
2—Drive End Housing
3—Packing
4—Overrunning Clutch
5—Shift Lever Pivot
6—O-Ring
7—Shift Lever
8—Center Bearing Housing
9—Solenoid Winding
10—Solenoid Switch Cover
11—Shunt Winding Lead
12—Armature
13—Bakelite Washer
14—Oil Seal
15—Center Bearing Bushing
16—Oil Felt
17—Brake Washer
18—Pinion Stop
19—Snap Ring
20—Shunt Winding Ground Screw
21—Field Winding
22—Pole Shoe (4 used)
23—Square Washer
24—Insulating Bushing
25—Square Insulator
26—Special Bolt
27—Field Coil Connector
28—Terminal Cover
29—Brush Ground Strap
30—End Frame Cover
31—Gasket
32—Commutator End Frame Bushing
33—Brush (4 used)
34—Brush Spring (4 used)
35—Commutator End Frame
36—Field Frame

Fig. 12-Starter (8430 Shown)

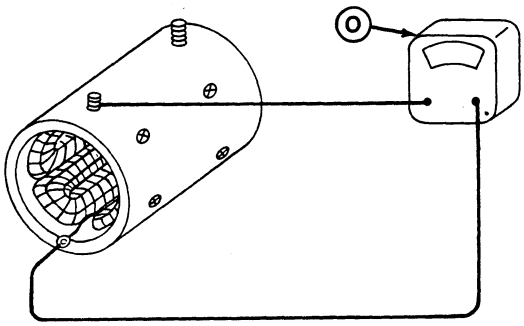

R 26574N

O—Ohmmeter

Fig. 13-Testing Shunt Winding for Open Circuit

With shunt winding ground disconnected, use an ohmmeter or test lamp to test for continuity between shunt winding ground and shunt winding terminal as shown in Fig. 13. If test does not show continuity, shunt winding is open circuited. Repair or replace windings.

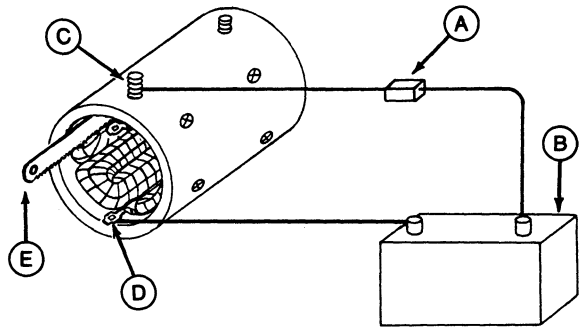

R32567

A—1/4-Ohm Resistor
B—12-Volt Battery
C—Field Terminal
D—Insulated Brush Lead
E—Hacksaw Blade

Fig. 14-Testing Field Windings for Open Circuits

Connect a test battery to field terminal and either insulated brush connector, using a resistor to limit current as shown in Fig. 14.

Use a hacksaw blade to test each winding for magnetism. If windings do not have magnetism, they are open circuited. Repair or replace windings.

NOTE: Because 1/4-ohm resistors capable of carrying several hundred watts are not widely available, a suggested alternative is to connect four 1-ohm resistors in parallel. Each resistor should be rated for at least 150 watts. A carbon pile can also be used. Limit current to 40 to 70 amps.

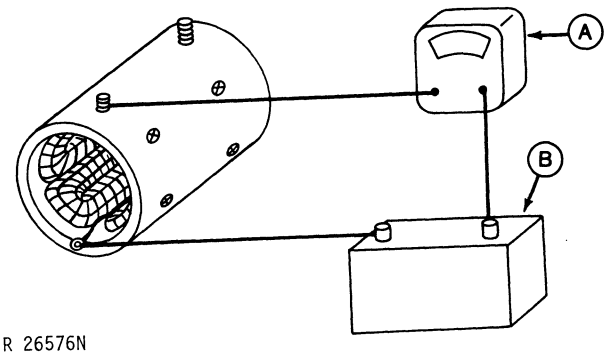

R 26576N

A—Ammeter **B—12-Volt Battery**

Fig. 15-Testing Shunt Windings for Short Circuit

Connect an ammeter in series with shunt windings as shown in Fig. 15. Windings should draw 15 to 20 amps at 12 volts. A high reading indicates a short circuit. A low reading indicates a poor connection. Repair or replace windings if defective.

There is no suitable way to check field windings for short circuits, but visual inspection will usually locate a burned spot.

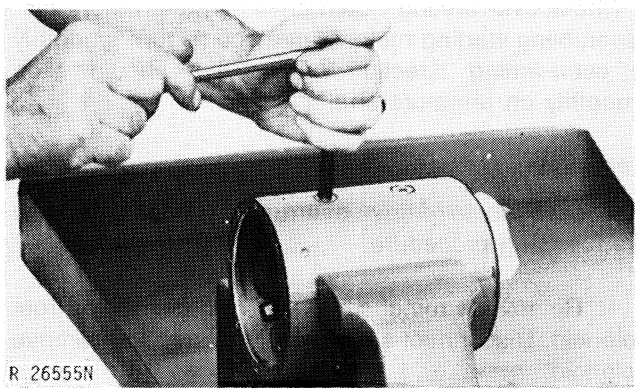

R 26555N

Fig. 16-Removing Pole Shoe Screws

If necessary to remove field windings, use a large screwdriver bit and socket wrench on pole shoe screws.

Take care to prevent distortion of main frame. Do not squeeze sides in vise or strike with hammer. If you must use an impact screwdriver to loosen screws, support each pole shoe individually, using a pole shoe spreader or the nose of an anvil.

Handle winding very carefully. They are easily damaged, causing shorts, opens, or grounds.

When installing field windings, tighten pole shoe screws as tight as reasonably possible. Use a center punch to lightly stake one edge of each screw.

Litho in U.S.A.

Field Windings—Continued

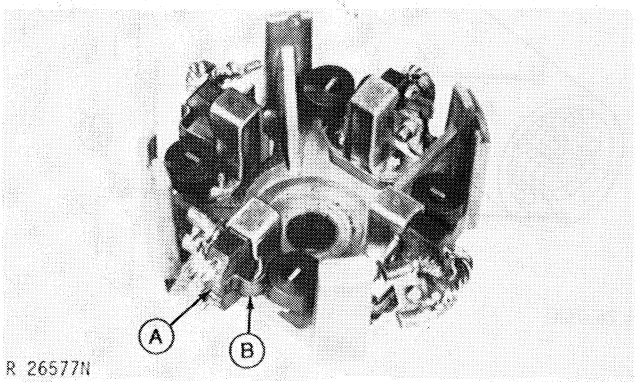

A—Brush **B—Brush Spring**

Fig. 17-Holding Brushes Back

Reassemble starting motor in reverse order of disassembly. Before installing end frame, push each brush back far enough for brush spring to rest against side of brush as shown in Fig. 17. After installing end frame, let brushes down against commutator.

Overrunning Clutch Drive

Check overrunning clutch drive by hand before disassembling starting motor. Drive should turn smoothly in overrunning direction only. Drive should slide smoothly on armature shaft.

Removal

If necessary to remove overrunning clutch drive, use the following procedure.

1. Remove terminal cover and field connector from solenoid. Disconnect shunt winding lead, and remove solenoid.

2. Chalk a reference mark across drive housing, shift lever housing, and main frame for proper reassembly.

3. Remove eight special screws securing drive housing and shift lever housing to main frame. Remove drive housing.

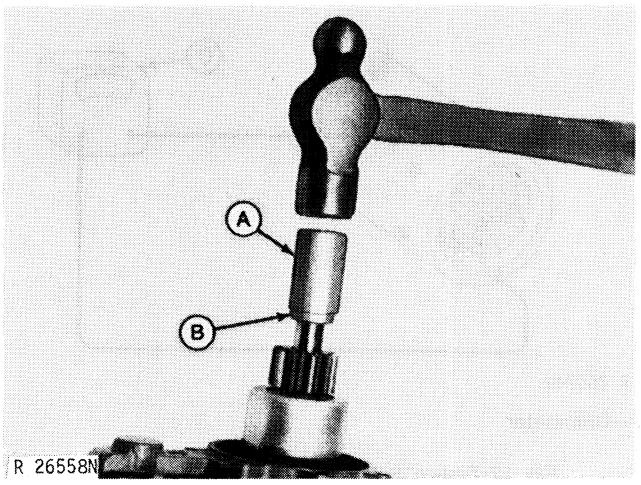

A—Pipe Coupling **B—Pinion Stop**

Fig. 18-Removing Pinion Stop

4. Remove pinion stop. Use a pipe coupling or other metal cylinder to drive pinion stop toward pinion. Remove retaining ring and slide pinion stop off shaft.

5. Carefully slide shift lever housing and overrunning clutch drive off shaft. Do not slide armature out of brush assembly at other end of shaft.

Inspection

Inspect overrunning clutch drive for signs of overheating, caused by keeping switch engaged too long after engine starts.

If drive has been damaged, check armature shaft closely. Replace armature if you find any damage to shaft.

Overrunning clutch drive is not serviceable. Install new drive if old one is defective.

IMPORTANT: Do not clean overrunning clutch drive with solvent. Solvent would dissolve lubricant in clutch mechanism. Clean only by wiping with a clean cloth. Do not lubricate drive.

Reassembly

1. Place overrunning clutch drive in shift lever housing, making certain that shift lever is engaged in slot.

2. Slide shift lever housing and overrunning clutch drive onto armature shaft.

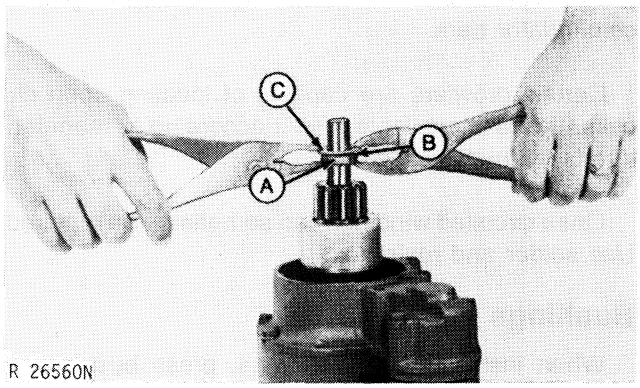

A—Pinion Stop
B—Retaining Ring
C—Washer (Remove After Using)

Fig. 19-Installing Pinion Stop

3. Slide pinion stop onto shaft, with open side toward end of shaft. Install retaining ring in groove. Force pinion stop over ring, using a washer and two pairs of pliers as shown in Fig. 19. Remove washer.
4. Install shift lever housing and drive housing.

Armature

To remove armature, starting motor must be almost completely disassembled.

1. Remove terminal cover and field connector from solenoid. Disconnect shunt winding lead, and remove solenoid.

2. Remove end frame cover.

3. Remove brush lead screws from two insulated brushes.

4. Remove two cap screws securing end frame to main frame. Remove end frame.

5. Chalk a reference mark across drive housing, shift lever housing, and main frame for proper reassembly.

6. Remove eight special screws securing drive housing and shift lever housing to main frame. Remove drive housing.

7. Remove pinion stop. Use a pipe coupling or other metal cylinder to drive pinion stop toward pinion, as shown in Fig. 16. Remove retaining ring and slide pinion stop off shaft.

8. Remove main frame.

9. Carefully slide armature shaft out of shift lever housing and overrunning clutch drive.

IMPORTANT: Do not clean armature with solvent. Solvent could damage insulation on windings. Use only mineral spirits and a brush.

Give armature a close visual inspection. Look for signs of dragging against pole shoes. Look for scoring under bushings or overrunning clutch drive.

Carefully check commutator. Look for roughness, burned commutator bars, or any material which might cause short circuits between bars.

Clean and touch up commutator if necessary with 00 sandpaper. Never use emery cloth. Clean all dust from armature when finished.

If commutator is out of round, badly burned, or rough, it can be turned down slightly on a lathe. Remove only enough metal to eliminate problem.

Undercut insulation between commutator bars to 1/32 inch (0.8 mm). Touch up commutator with sandpaper after using lathe. Clean dust and metal chips from armature when finished.

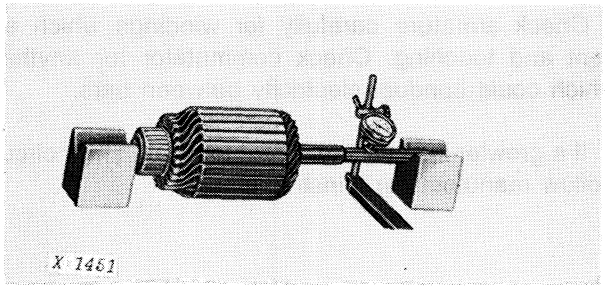

Fig. 20-Checking Armature for Bent Shaft

Place armature in V-blocks and check for a bent shaft as shown in Fig. 20. Replace armature if shaft is bent.

If no-lead test indicates possibility of grounded, short circuited, or open circuited windings, check armature for these defects. Windings are large, and defect might be easy to spot.

Litho in U.S.A.

Grounded Windings

Symptoms—Starting motor cranks engine slowly or not at all. On no-load test, motor has low armature speed and high current draw or fails to operate and has high current draw.

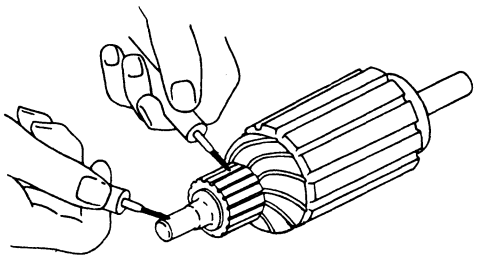

R 26561N

Fig. 21-Checking Armature for Grounded Windings

Use an ohmmeter or test lamp to test for continuity between commutator bars and armature shaft. If test shows continuity, a winding is grounded. If fault cannot be corrected, replace armature.

All armature windings are connected in series, so you need to check only one commutator bar.

Short Circuited Windings

Symptoms - Starting motor cranks engine slowly. On no-load test, motor has low armature speed and high current draw.

Check armature carefully for windings which are bent and touching. Check commutator for anything which could conduct electricity between bars.

If a growler is available, use it to locate short circuit. Follow manufacturer's instructions.

Open Circuited Windings

Symptoms - Starting motor cranks engine slowly. On no-load test, motor has low armature speed and high current draw.

Open circuits are usually due to overheating caused by excessive cranking. Check connections of windings to commutator bars. Also look for burned edges on commutator bars.

Certain growlers are capable of locating open circuits. If one is available, use it according to manufacturer's instructions.

Open circuited windings can sometimes be repaired. Use solder and rosin flux.

Bushings

When installing new bushings, press bushings in from chamfered end of bores. Align holes in end bushings with lubrication wicks.

Install a new seal and lubrication wick when replacing center bearing. Saturate wick with medium grade engine oil.

Only if necessary, ream bushings after installation. I.D. of end bushings should be 0.669 to 0.670 inch (17.00 to 17.03 mm). I.D. of center bushing should be 1.182 to 1.184 inches (30.02 to 30.07 mm).

ASSEMBLY

Assemble starting motor in reverse order of disassembly. Install pinion stop as shown in Fig. 19. Use new seal and packings.

Apply a coat of Bosch VS 10 832 Ft* grease to both end bearings, grease reservoirs for both end bearings, armature shaft except center bearing area, brake washer, both ends of shift lever, and shift lever pivot shaft. Avoid excessive lubrication.

**If specified grease is not available, substitute Esso Beacon 325 or Delco-Remy Lubricant No. 1960954.*

INSTALLATION

Install starter. On 8430 Tractor, use JDE-80 starter wrench on nut behind starter. Connect wiring harness and positive battery cable as shown in Fig. 22 or 23.

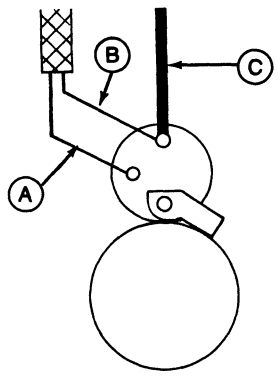

A—White **B—Red** **C—Positive Starter Cable**

Fig. 22-Starter Connections for 8430 Tractor

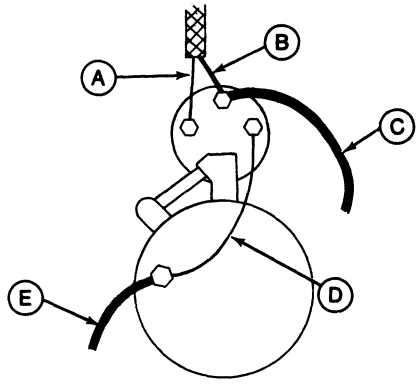

A—White
B—Red
C—Positive Starter Cable
D—Solenoid Return Cable
E—Starter Ground Cable

Fig. 23-Starter Connections for 8630 Tractor

Litho in U.S.A.

Group 35
LIGHTING CIRCUITS

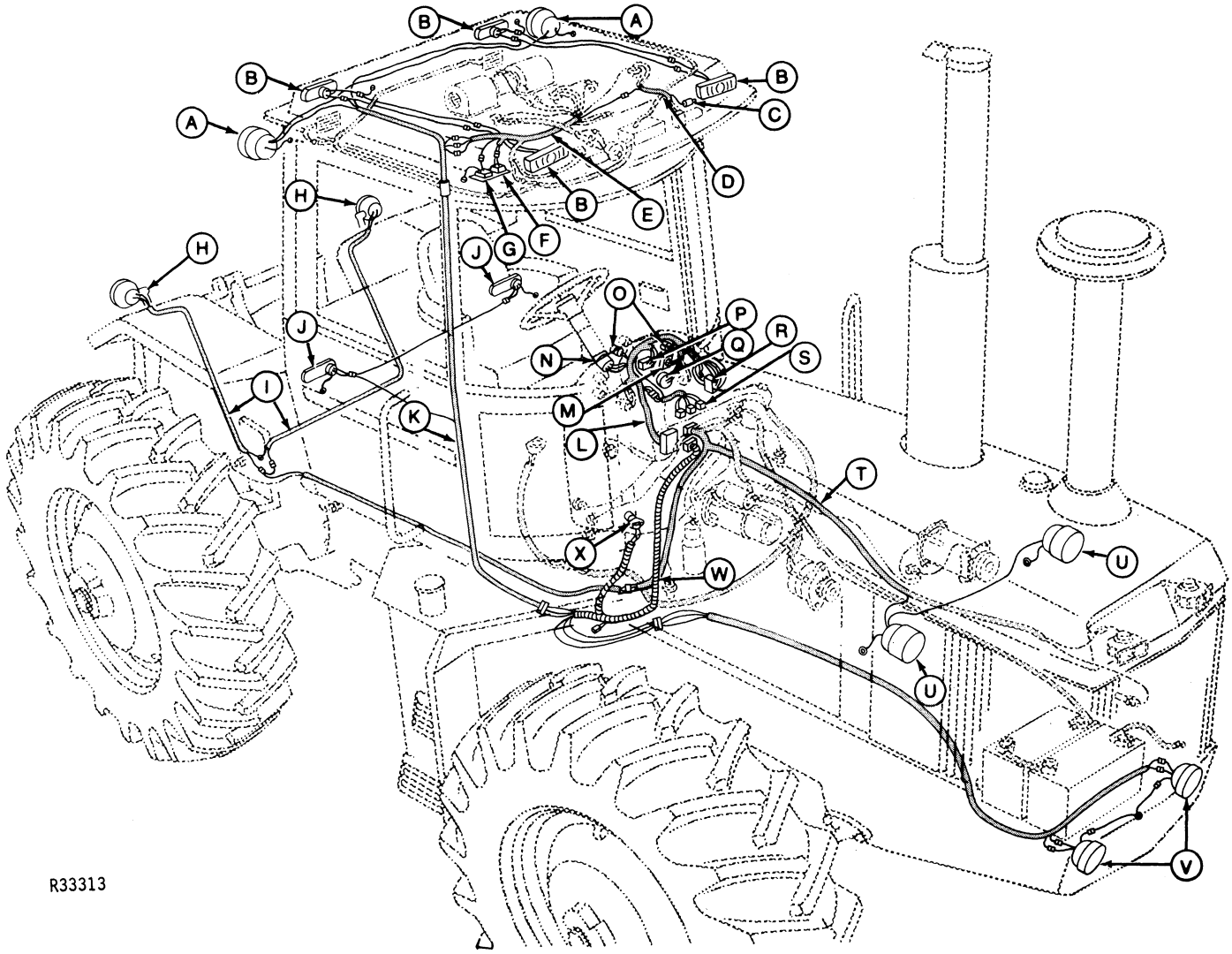

A—Upper Rear Flood Lamps
B—Warning Lamps
C—Dome Lamp Door Switch
D—Left-Hand Wiper Harness
E—Sound-Gard Body Harness
F—Dome Lamp
G—Console Lamp
H—Lower Rear Flood Lamps
I —Rear Fender Harnesses
J —Tail Lamps
K—Right-Hand Lighting Harness
L —Instrument Harness
M—Instrument Lamps
N—Hi-Beam Indicator
O—Turn Indicator Lamps
P—Turn Signal Controller
Q—Light Switch
R—Circuit Breakers
S—Lighting Relays
T—Engine Harness
U—Front Flood Lamps
V—Dual-Beam Head Lamps
W—Bulkhead Harness
X—Dimmer Switch

Fig. 1-Lighting System Component Location (Later Tractors)

GENERAL INFORMATION

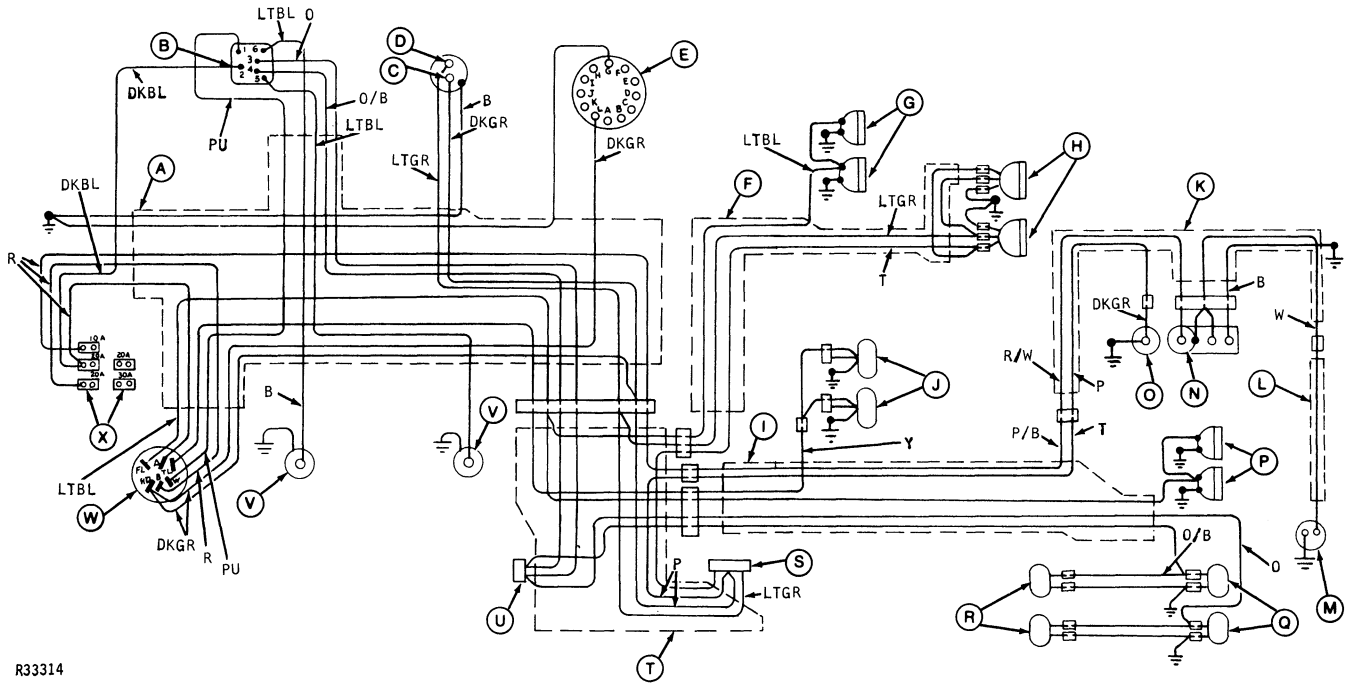

A—Instrument Harness
B—Turn Signal Controller
C—Tach Lamp
D—Hi-Beam Indicator
E—Instrument Cluster Connector
F—Engine Harness
G—Front Flood Lamps
H—Dual-Beam Head Lamps
I —Right-Hand Lighting Harness
J —Tail Lamps
K—Sound-Gard Body Harness
L—Left-Hand Wiper Harness
M—Dome Lamp Door Switch
N—Dome Lamp
O—Console Lamp
P —Upper Rear Flood Lamps
Q—Rear Warning Lamps
R —Front Warning Lamps
S —Dimmer Switch
T —Bulkhead Harness
U—For Auxiliary Turn Signals
V —Turn Indicator Lamps
W—Light Switch
X —Circuit Breakers

B —Black
DKBL —Dark Blue
DKGR—Dark Green
LTBL —Light Blue
LTGR —Light Green
O —Orange
P —Pink
PU —Purple
R —Red
T —Tan
W —White
Y —Yellow

Fig. 2-Lighting Circuits on 8430 Tractors (-5927) and 8630 Tractors (-8117) (Other Wiring Not Shown)

The lighting system was changed extensively on later tractors—8430 Tractors (5928-) and 8630 Tractors (8118-).

Later tractors have six flood lamps as standard equipment. (Tractors without rear fenders have only four.) Three relays were added to control flood lamps.

When diagnosing any lighting problem, make sure the wiring diagrams you use apply to tractors in the correct serial number range.

See Group 5 for additional wiring diagrams.

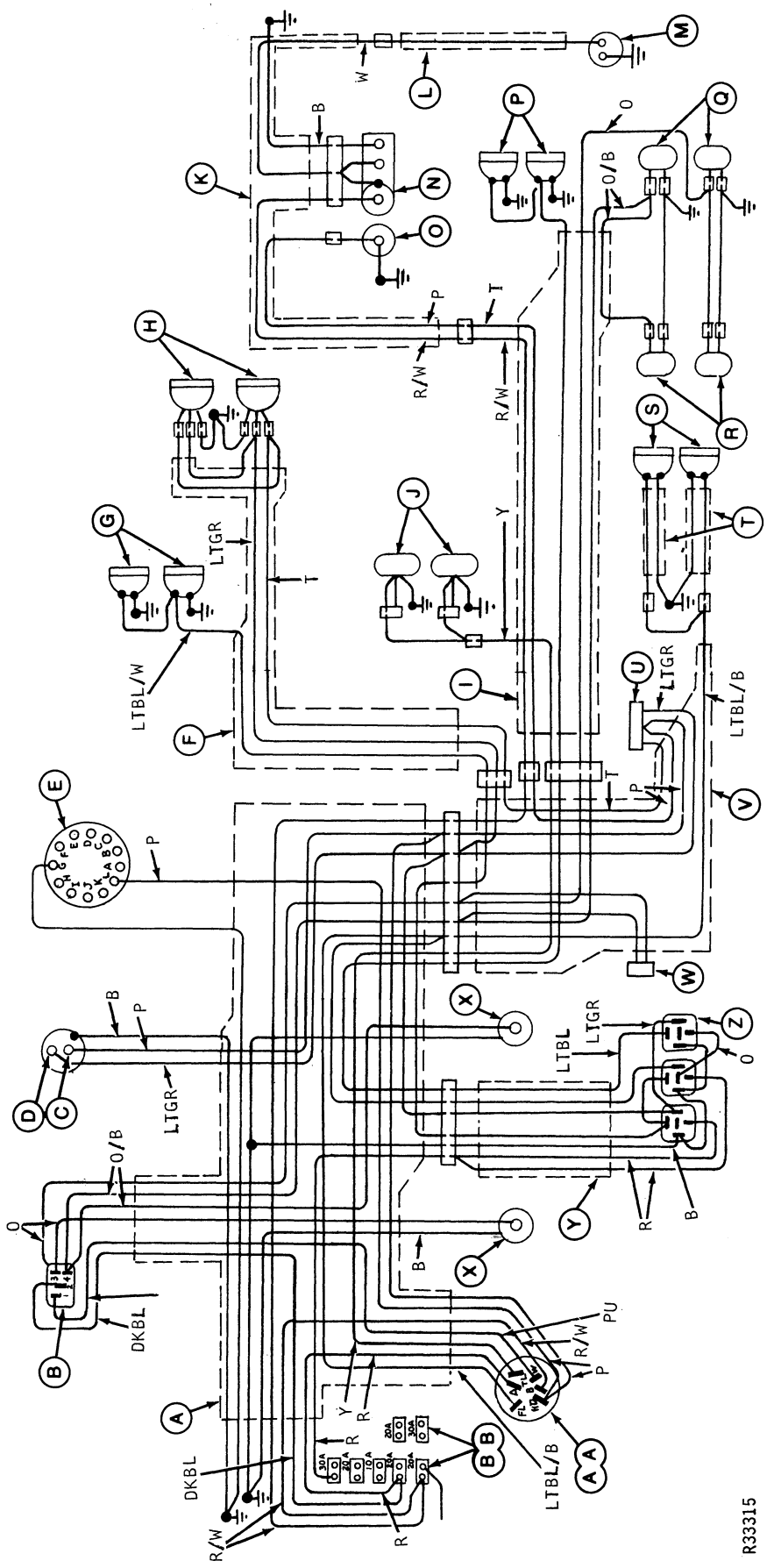

Fig. 3-Lighting Circuits on 8430 Tractors (5928-) and 8630 Tractors (8118-) (Other Wiring Not Shown)

Circuit Breakers

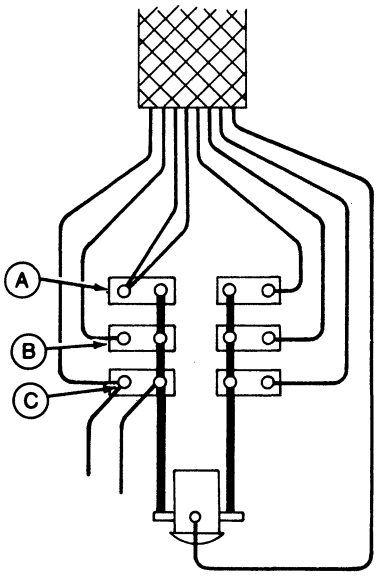

R33316

A—Dome Lamp, Key Switch (10 Amp)
B—Flood Lamps, Tail Lamps, Warning Lamps, Turn Signals (20 Amp)
C—Head Lamps (20 Amp)

Fig. 4-Lighting Circuit Breakers on 8430 Tractors (-4352) and 8630 Tractors (-5910)

All lighting circuits are protected by circuit breakers located behind left-hand cowl. If all lights on one circuit fail at the same time, a circuit breaker may be tripped.

Circuit breakers reset themselves, but only after load is removed. A heater element keeps breaker tripped as long as load is connected.

To reset a breaker, turn off switches for all circuits connected to that breaker. Wait at least two minutes before trying circuit again.

If this doesn't reset breaker, disconnect battery ground cable for at least two minutes. If breaker does not reset, breaker is defective. If it does reset, check carefully for a short circuit in the wiring.

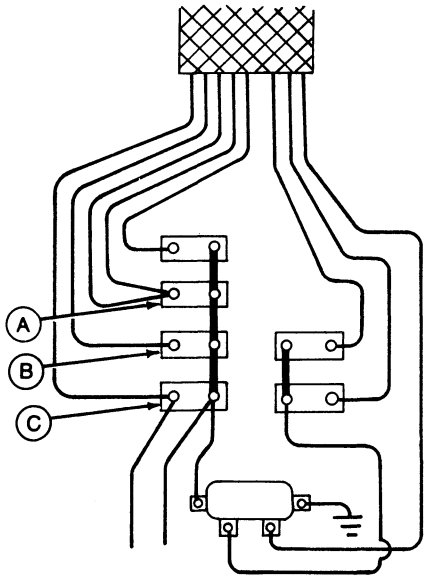

R33317

A—Dome Lamp, Key Switch (10 Amp)
B—Flood Lamps, Tail Lamps, Warning Lamps, Turn Signals (20 Amp)
C—Head Lamps (20 Amp)

Fig. 5-Lighting Circuit Breakers on 8430 Tractors (4353-5927) and 8630 Tractors (5911-8117)

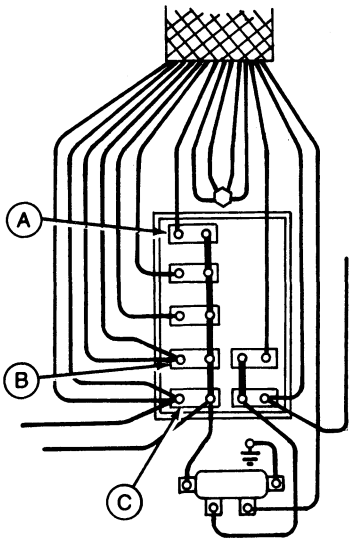

R33318

A—Front Flood Lamps, Upper Rear Flood Lamps (30 Amp)
B—Turn Signals, Warning Lamps, Tail Lamps, Lower Rear Flood Lamps (20 Amp)
C—Head Lamps, Dome Lamp (20 Amp)

Fig. 6-Lighting Circuit Breakers on 8430 Tractors (5928-) and 8630 Tractors (8118-)

Trouble Shooting with Voltage Detector

The D-05136ST Voltage Detector is ideal for trouble shooting lighting circuits.

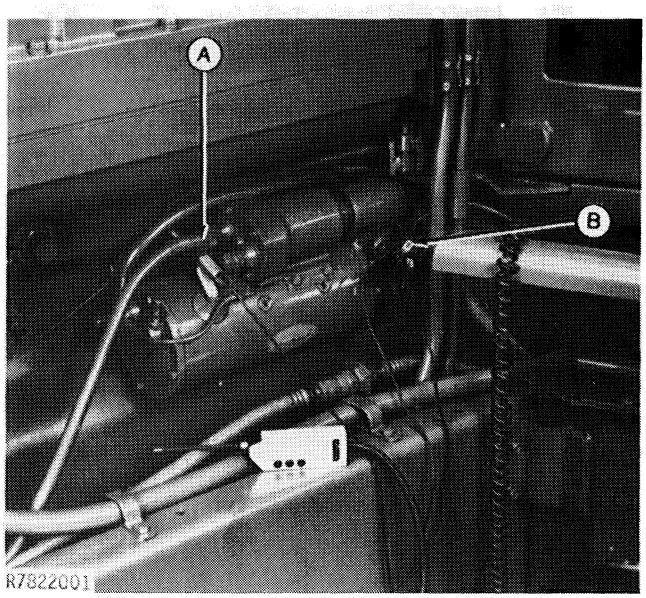

Fig. 7-Connecting Voltage Detector

1. Attach "A" clip to a known source of 12 volts. If all other electrical components are working properly, attach clip to battery terminal on starting motor or "B" terminal on alternator. If not, attach clip to positive terminal on rear battery.

2. Attach "B" clip to a convenient ground on tractor frame, making sure it makes a good electrical connection. Attach "C" clip to "B" clip.

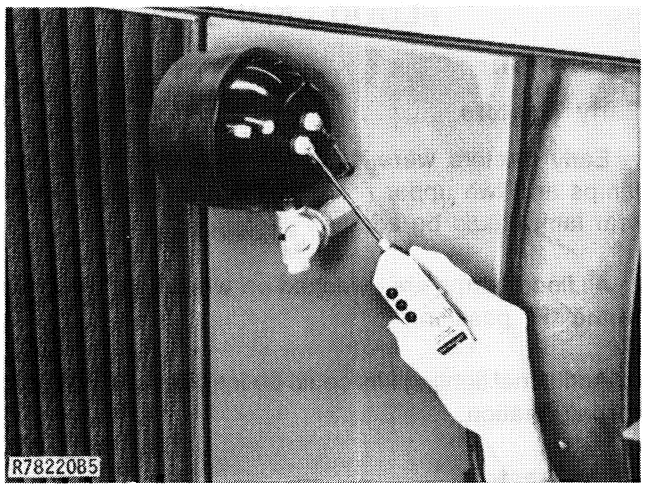

Fig. 8-Using Voltage Detector

3. Use probe to check lighting circuit for voltage. Starting at light, trace circuit back until you detect voltage, then try to correct problem. "A" light will glow when probe makes contact with a source of 12 volts.

4. Always check ground circuit, as many lighting problems are caused by a poor ground. "C" light will glow when probe makes contact with a good ground.

5. Check all connectors. Faulty connections cause many lighting problems, particularly intermittent problems.

FLOOD LAMPS

Operation

Early Tractors

Early tractors were equipped with two front flood lamps and two upper rear flood lamps. A third upper rear lamp could be added.

All flood lamps are switched on when light switch is in the "F" position.

Additional lighting kits could be installed. See page 8 for information.

Later Tractors

8430 Tractors (5928-) and 8630 Tractors (8118-) were equipped with an improved lighting package. Flood lamps are controlled by three relays, and operation is more complex than earlier systems.

1. Front flood lamps are switched on when light switch is in the "F" position. In addition, they are switched on in the "H" position when headlights are on high beam. This gives improved highway lighting.

2. Lower rear flood lamps are switched on when light switch is in the "F" position.

3. Upper rear flood lamps are switched on only when light switch is in the "F" position and headlights are on high beam. Switching to low beam reduces glare in extremely dusty field conditions.

Figs. 11 through 14 show flood lamp operation in each switch position.

Relays

Relays are mounted inside control support. For access, remove cowl rear cover and left-hand cowl.

To keep dust out of relays, install an R67982 felt pad on each relay connector.

NOTE: Center relay uses five terminals and is not interchangeable with other two. Do not mix.

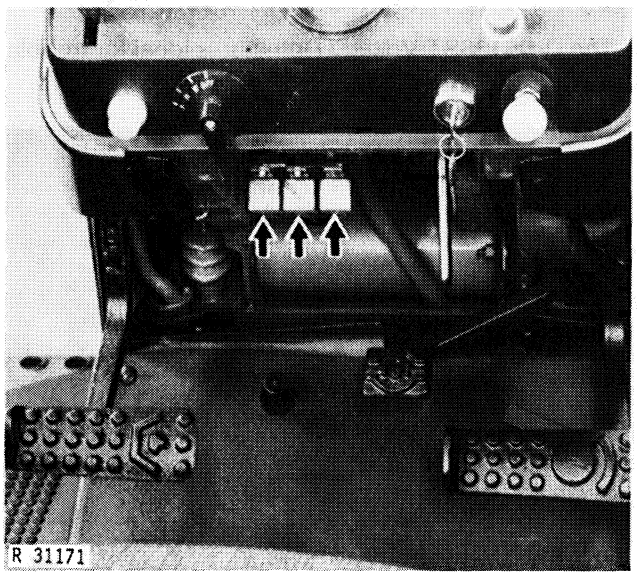

Fig. 9-Lighting Relays

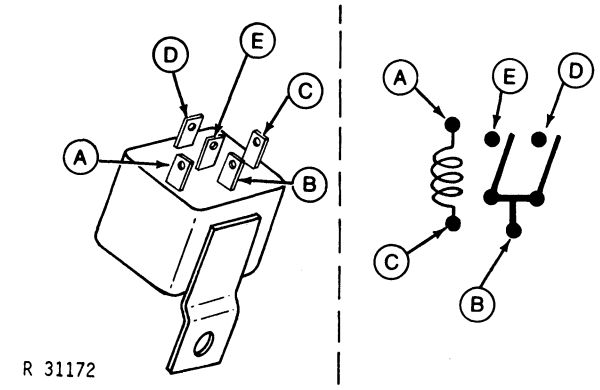

A—Ground
B—Power In
C—Control Circuit
D—Power Out
E—Power Out (Center Relay Only)

Fig. 10-Lighting Relay Terminals

To test a relay, carefully note mounting of terminals and position as shown in Fig. 7.

1. Connect ohmmeter leads to terminals B and D. Switch should be open, giving a resistance of infinity. If not, replace relay.

2. Connect a 12-volt battery to terminals A and C, and note ohmmeter reading. Switch should close, giving a resistance of zero. If not, replace relay.

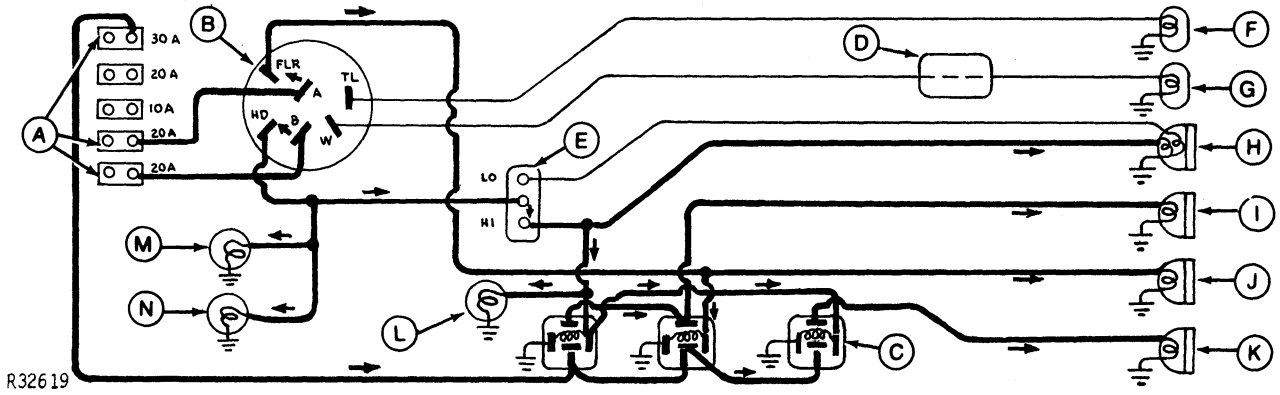

Fig. 11-Light Switch at "F" and Dimmer Switch on High

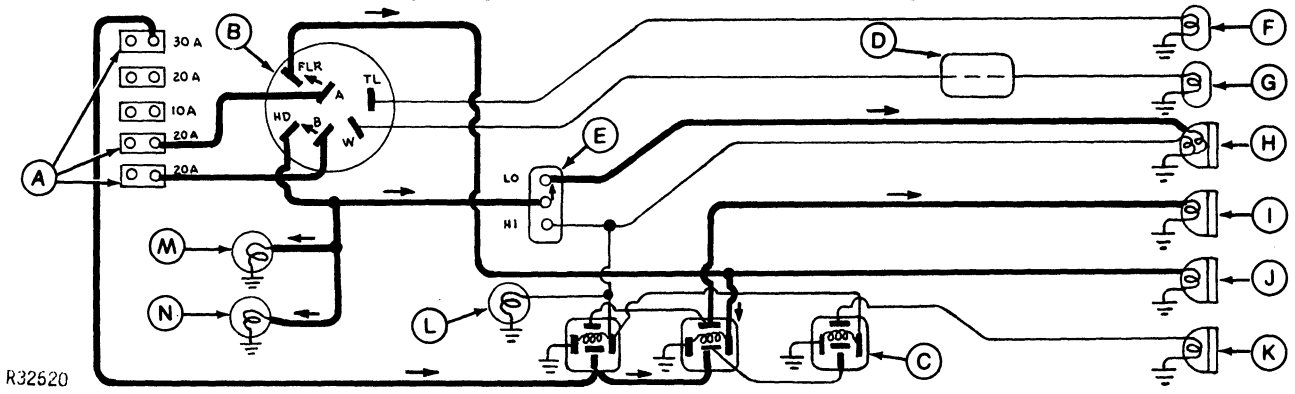

Fig. 12-Light Switch at "F" and Dimmer Switch on Low

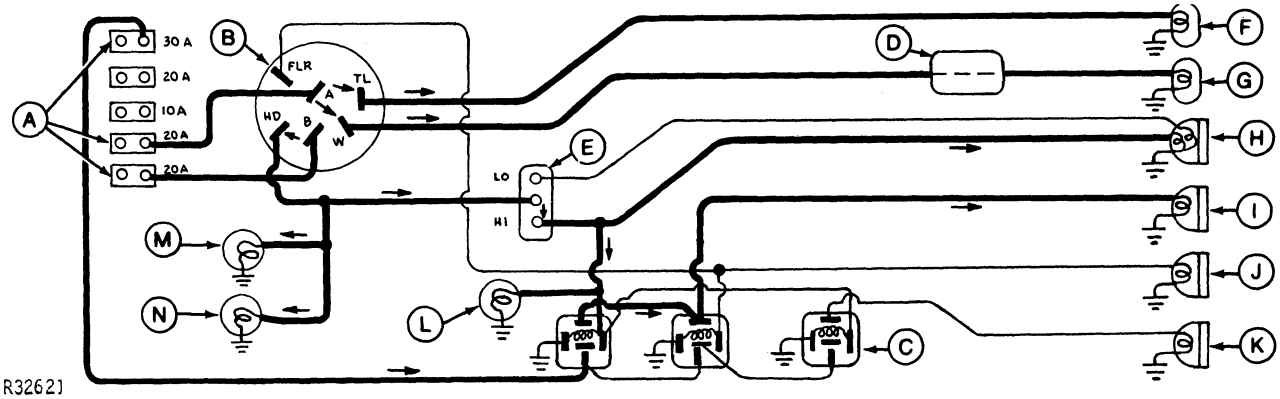

Fig. 13-Light Switch at "H" and Dimmer Switch on High

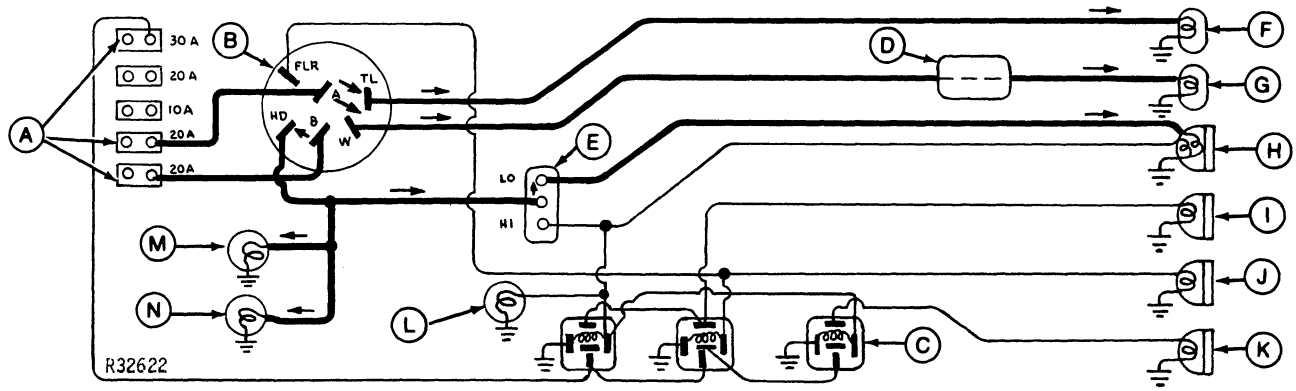

A—Circuit Breakers **D—Turn Signal Con.** **G—Warning Lamps** **J—Lower Rear Flood Lamps** **M—Instrument Lamps**
B—Light Switch **E—Dimmer Switch** **H—Head Lamps** **K—Upper Rear Flood Lamps** **N—Console Lamp**
C—Lighting Relays **F—Tail Lamps** **I —Front Flood Lamps** **L—High Beam Indicator**

Fig. 14-Light Switch at "H" and Dimmer Switch on Low

Litho in U.S.A.

Auxiliary Lighting Kits

Two or four rear fender-mounted flood lamps can be installed on early tractors. On tractors without rear fenders, the lamps are installed on a special bar.

Do not install these kits on later tractors—8430 Tractors (5928-) and 8630 Tractors (8118-). The improved lighting package, including more lamps and more watts per lamp, is standard on later tractors. Additional bulbs would overload the charging system. However, a tractor without rear fenders can be equipped with the special bar and two lamps.

The lighting kit includes a circuit breaker, a relay, and a second light switch. Installation instructions are included.

When the main light switch is turned to "F", the headlamps and front flood lamps are switched on. This also closes the relay to provide current to the second light switch.

The second switch can then be turned one notch to switch on upper rear flood lamps, two notches to switch on both upper and lower rear lamps, or three notches to switch on lower lamps only.

Use Fig. 15 to diagnose problems in auxiliary lighting kit. Auxiliary light switch is identical to main light switch.

Current to upper rear flood lamps comes from main light switch terminal "FLR", by way of auxiliary light switch terminals "A" and "W". Current to lower rear lamps comes from added circuit breaker, by way of added relay and auxiliary light switch terminals "B" and "HD".

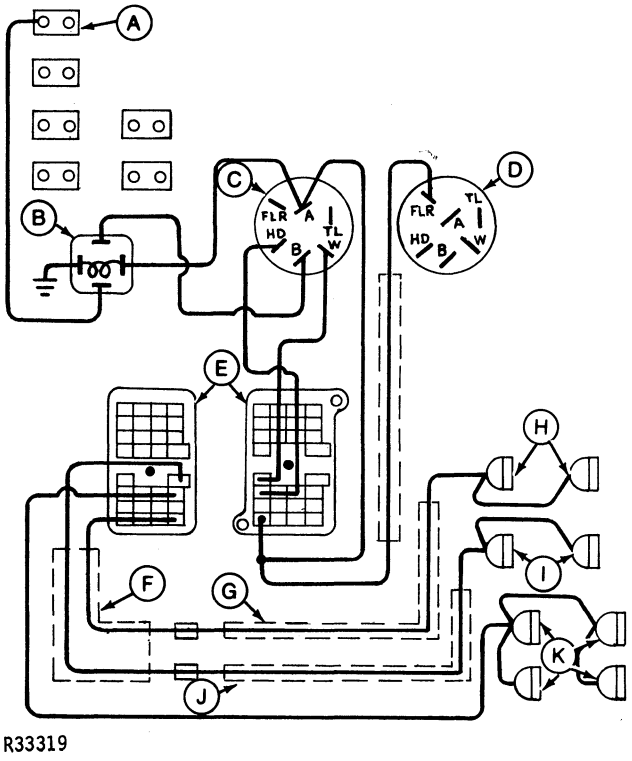

A—Added Circuit Breaker
B—Added Relay
C—Added Light Switch
D—Main Light Switch
E—Bulkhead Connector
F—Bulkhead Harness
G—Front Lighting Harness
H—Front Flood Lamps
I —Upper Rear Flood Lamps
J —Right-Hand Lighting Harness
K—Added Flood Lamps

Fig. 15-Auxiliary Lighting Kit

HEAD LAMPS AND TAIL LAMPS

Operation

Dual-beam head lamps are switched on when light switch is in either "H" or "F" position. Foot operated dimmer switch selects high or low beam.

Tail lamps are switched on only when light switch is in the "H" position.

Head Lamp Adjustment

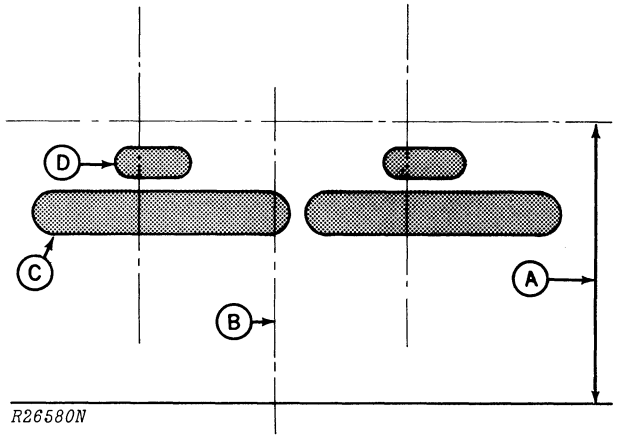

A—Height of Lamp
B—Centerline of Tractor
C—Lower Light Zone
D—Upper Light Zone

Fig. 16-Light Pattern at 25 ft. (8 m)

Adjust head lamps so they shine slightly down and to the right.

Use Fig. 16 as a guide for adjustment. Have lights on low beam. Sight across hood ornament and steering wheel to locate tractor centerline.

TURN SIGNALS AND WARNING LAMPS

Operation

When light switch is in the "W" or "H" position, power feeds through flasher in turn signal controller to all four warning lamps.

When turn signal is used, lamps on one side flash and lamps on other side glow steadily.

Turn Signal Controller

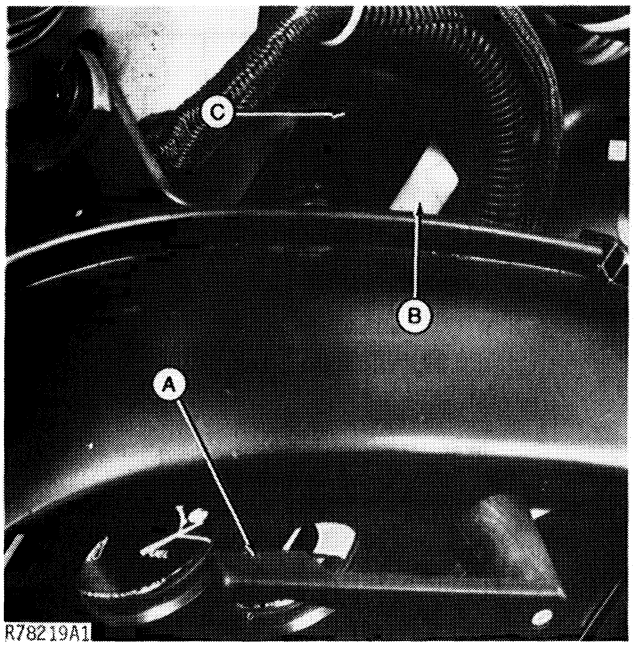

A—Turn Signal Lever
B—Turn Signal Controller
C—Mounting Bracket

Fig. 17-Turn Signal Controller

Terminal usage is indicated in following chart. For access to turn signal controller, remove left cowl.

TERMINAL	WIRE COLOR	USE
1	Purple	Power in from light switch for warning lamp operation
2	Blue	Power in from circuit breaker for turn signal operation
3	Orange	To left turn lamp and indicator lamp
4	Orange & Black	To right turn lamp and indicator lamp
5	Not used	
6	Not used	

NOTE: On early tractors, indicator lamps were connected to terminals 5 and 6. They flashed when turn signals were used but not when warning lamps were used.

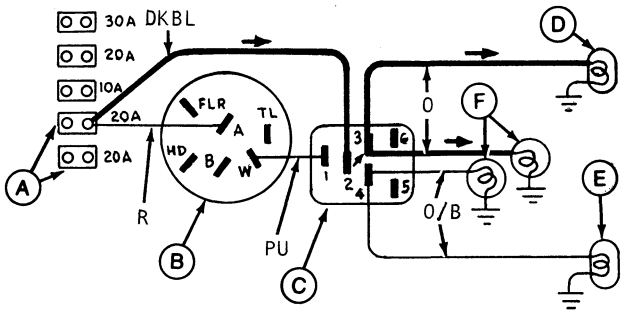

R32623

Fig. 18-Signaling Left Turn

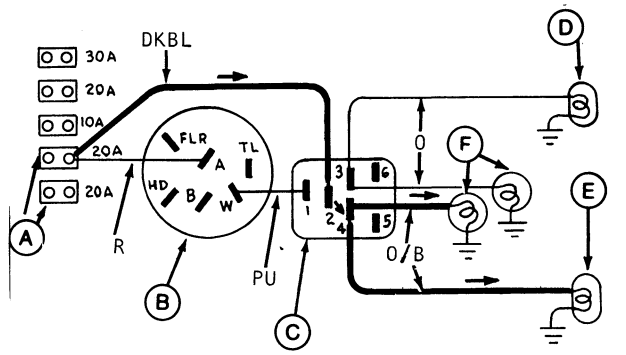

R32624

Fig. 19-Signaling Right Turn

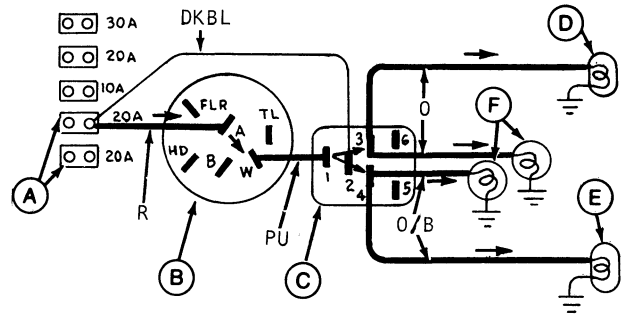

R32625

A—Circuit Breakers
B—Light Switch
C—Turn Signal Controller
D—L. H. Warning Lamps
E—R. H. Warning Lamps
F—Turn Indicator Lamps

Wire Colors:
B—Black
DKBL—Dark Blue
O—Orange
PU—Purple
R—Red

Fig. 20-Warning Lamp Operation

To test controller, use an ohmmeter or test lamp to test for continuity as shown in the following chart.

Switch Position	Terminals in Continuity with Terminal No. 1
Off	3, 4 (Through flasher)
Left	3, 6 (Through flasher)
	2, 4 (Not through flasher)
Right	4, 5 (Through flasher)
	2, 3 (Not through flasher)

Overtightening the long turn signal lever attaching screw may cause the turn signal controller to bind, making it difficult to move the lever. If this happens, loosen the screw four or five turns and gently drive the screw inward to reposition the threaded insert in the controller.

LIGHT SWITCH

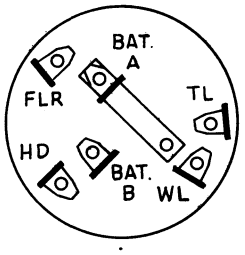

R17193N

Fig. 21-Light Switch Terminals

Light switch should have continuity between terminals listed in the following chart. To test switch, disconnect wiring and use an ohmmeter or test lamp to test for continuity.

Switch Position	Continuity Between
W	Bat. A to WL
H	Bat. A to TL, WL Bat. B to HD
F	Bat. A to FLR Bat. B to HD

INSTRUMENT, INDICATOR, AND CONSOLE LAMPS

Instrument cluster lights, tach light, and console light are powered by terminal HD on light switch. All four should glow whenever headlights are turned on.

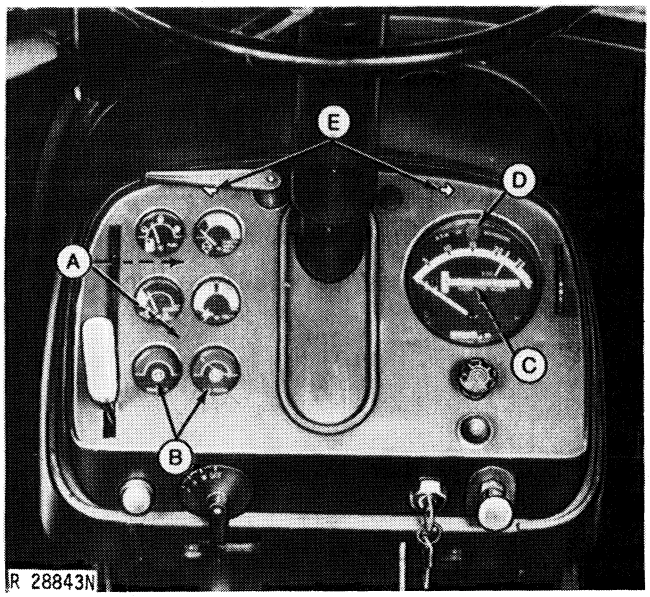

A—Instrument Lamps
B—Indicator Lamps
C—Tach Lamp
D—High-Beam Indicator
E—Turn Indicators

Fig. 22-Instrument and Indicator Lamps

Instrument cluster lamps make contact with printed circuit board. They use terminal 13 of multiple connector. For more information on instrument cluster, see Group 40.

DOME LAMP

Dome lamp is connected to bottom, left-hand circuit breaker. Bulb is "hot" at all times, but is grounded only when either door switch or toggle switch on lamp housing is closed.

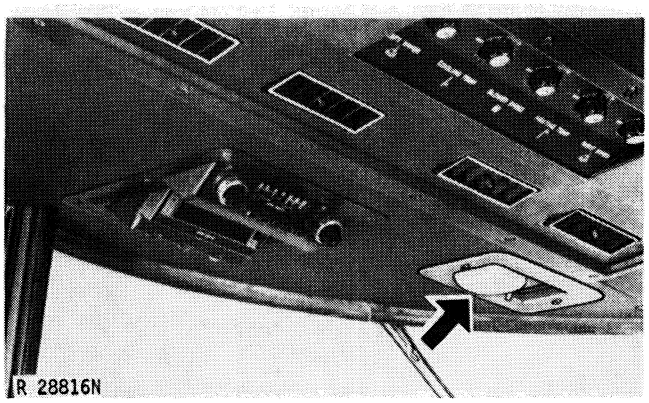

Fig. 23-Dome Lamp (Later Tractor Shown)

If dome lamp stays on with door closed and toggle switch turned off, add R41337 Washers beneath door switch.

BULB REPLACEMENT

Flood Lamps and Head Lamps

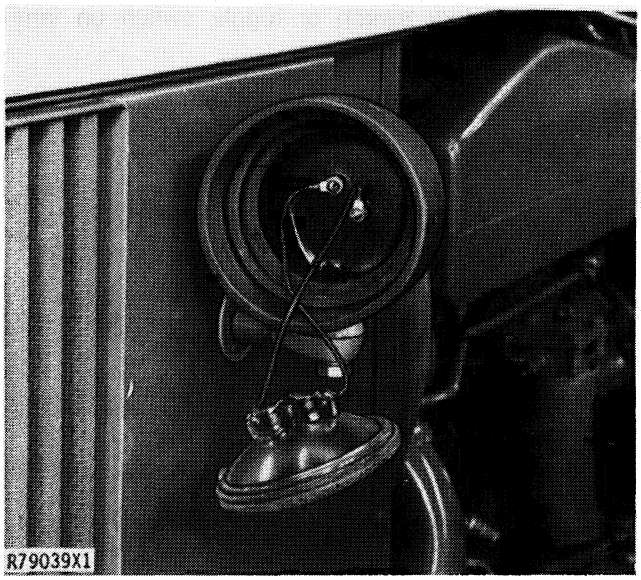

Fig. 24-Removing Flood Lamp Bulb

1. Use a screwdriver to pry bulb from rubber bezel. Work your way around circumference, taking care to not break bulb.

2. Disconnect wires, and connect new bulb.

3. Carefully push bulb into rubber bezel. Make sure it is properly positioned.

Warning Lamps and Tail Lamps

Fig. 25-Removing Tail Lamp Bulb

1. Remove lens by removing four screws.

NOTE: Ground wire for tail lamp is attached to one of the screws. Loosen this screw only enough to swing lens out of the way. Nut is accessible by reaching up behind panel.

2. Remove bulb by pressing it slightly inward and turning counterclockwise.

3. Press new bulb in, turn clockwise, and replace lens.

Instrument Lamps and Indicator Lamps

1. Remove cowl rear cover and left-hand cowl.

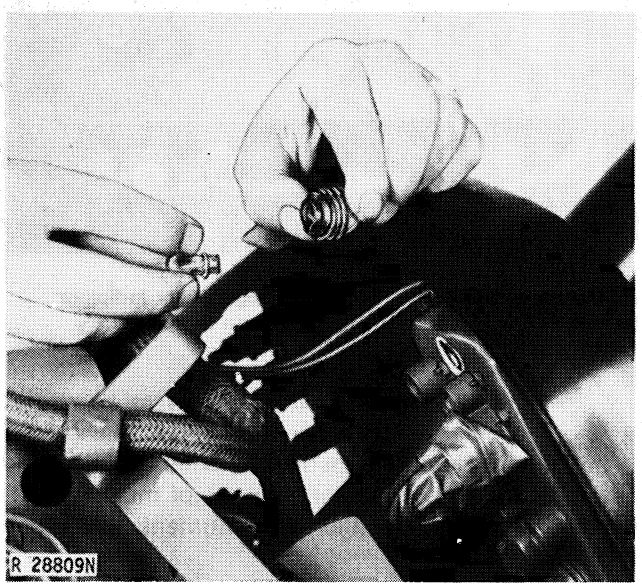

Fig. 26-Removing Instrument Lamp Bulb

2. Remove bulb socket from back of instrument cluster by turning counterclockwise. Remove bulb from socket by pulling straight out.

3. Press new bulb firmly into socket, install socket in instrument cluster, and reinstall cowl.

Tach Lamp, High-Beam Indicator, Turn Indicators, and Lube Indicator

1. Remove cowl rear cover and right-hand cowl.

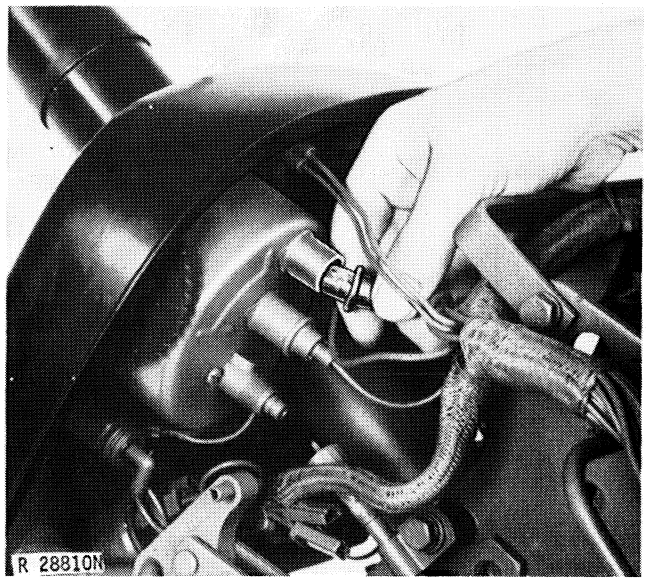

Fig. 27-Removing High-Beam Indicator Bulb

2. On tach lamp or high-beam indicator, pull bulb socket from back of tube. On turn indicators, remove mounting bolts and raise dash panel on transmission lube indicator, twist socket counterclockwise before pulling out.

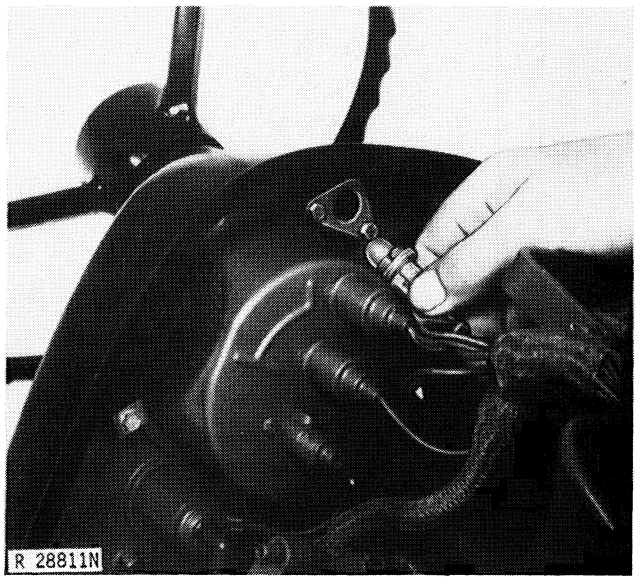

Fig. 28-Removing Turn Indicator Bulb

3. Press bulb slightly inward and twist counterclockwise to remove.

4. Reverse the procedure to install new bulb.

Dome Lamp and Console Lamp

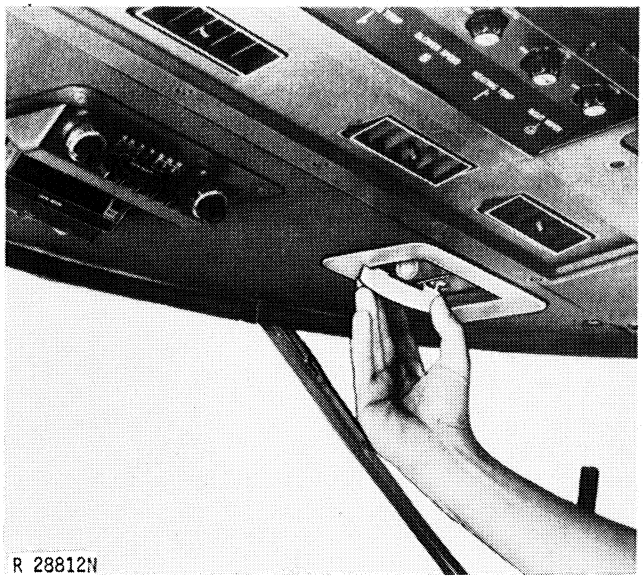

Fig. 29-Removing Dome Lamp Bulb

To remove dome lamp bulb, remove lens by squeezing sides slightly together. Press bulb slightly inward and twist counterclockwise to remove.

Fig. 30-Removing Console Lamp Bulb

To remove console lamp bulb, lower lamp housing from roof by removing two screws. Remove bulb socket by twisting slightly counterclockwise. Press bulb slightly inward and twist counterclockwise to remove.

Litho in U.S.A.

Litho in U.S.A.

Group 40
INSTRUMENT AND ACCESSORY CIRCUITS

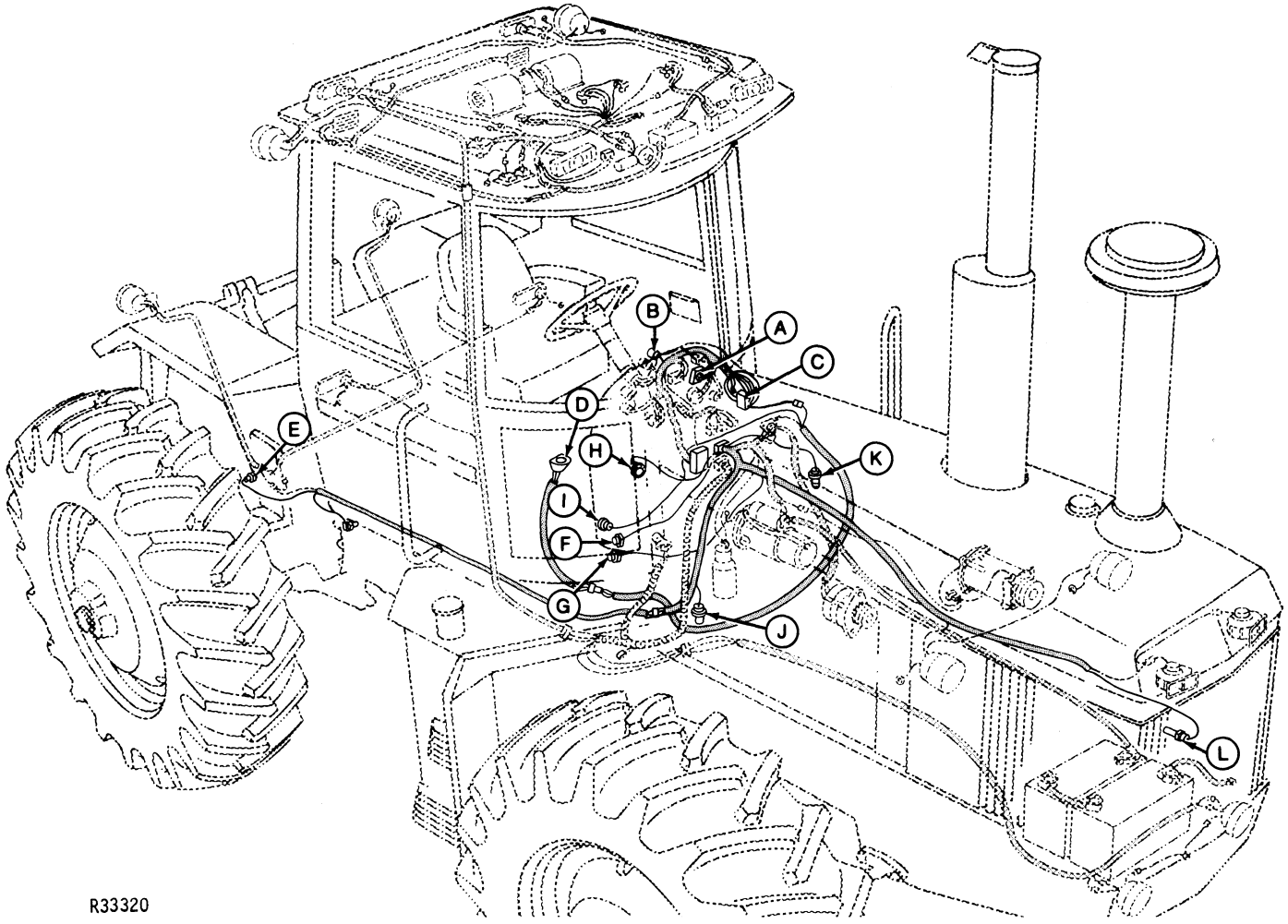

A—Instrument Cluster
B—Transmission Lube Pressure Indicator
C—Circuit Breakers
D—Clutch Lube Pressure Gauge
E—Transmission Lube Pressure Switch
F—Transmission Lube Pressure Override Switch
G—Clutch System Pressure Switch
H—Fuel Gauge Sending Unit
I —Clutch Lube Pressure Sending Unit
J —Oil Pressure Sending Unit
K—Temperature Sending Unit
L—Air Cleaner Vacuum Switch

Fig. 1-Instrument Circuits

INSTRUMENT CLUSTER

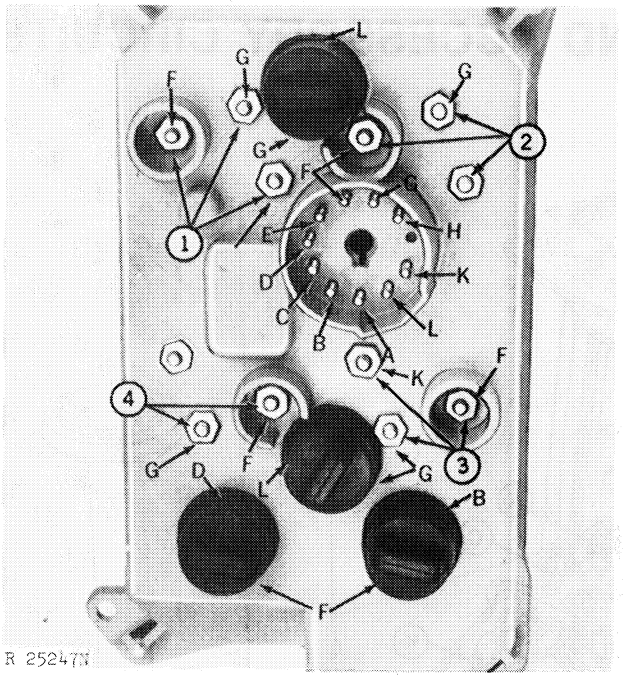

1—Water Temperature Gauge Terminals
2—Fuel Gauge Terminals
3—Engine Oil Pressure Gauge Terminals
4—Voltmeter Terminals

Fig. 2-Instrument Cluster Terminals

Operation

Instruments and indicator lamps are grouped into an instrument cluster. All circuits feed through an 11-terminal connector. Nine of the 11 terminals are used.

A printed circuit board carries current from connector to gauges and bulbs.

Terminal F of multiple connector provides battery voltage to cluster whenever key switch is turned on.

Entire cluster is grounded through terminal G, which is connected to a ground screw near the circuit breakers. All electrical components in Sound-Gard Body are grounded by a wire at front right-hand Sound-Gard Body mount.

Access and Removal

For access to back of instrument cluster, remove left-hand cowl. This provides enough room to change bulbs or connect wiring.

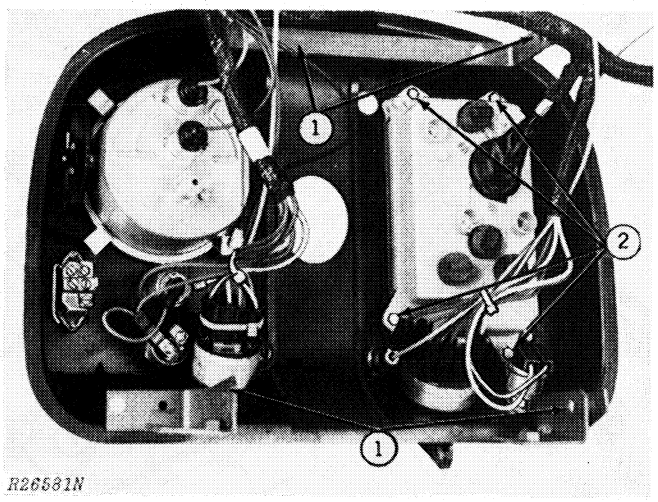

Fig. 3-Instrument Cluster Removal

To have enough room for removal of cluster, you must tilt dash panel back.

1. Remove four cap screws securing dash panel.

2. Tilt dash panel back, and remove cap screw at each corner of instrument cluster.

3. Disconnect multiple connector, and remove cluster.

Testing

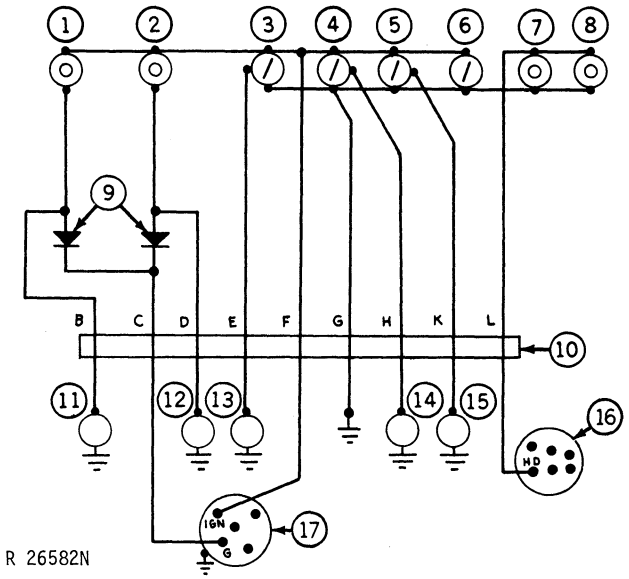

1—Transmission Oil Indicator
2—Air Cleaner Indicator
3—Engine Temperature Gauge
4—Fuel Gauge
5—Engine Oil Pressure Gauge
6—Voltmeter
7—Instrument Lamp
8—Instrument Lamp
9—Diodes
10—Multiple Connector
11—Transmission Oil Sender
12—Air Cleaner Sender
13—Engine Temperature Sender
14—Fuel Sender
15—Engine Oil Pressure Sender
16—Light Switch
17—Key Switch

Fig. 4-Schematic Diagram of Instrument Cluster

Gauges

If **all four gauges** malfunction, either power in or ground circuit is probably defective.

1. Instrument cluster is protected by 10-amp circuit breaker. If it trips, you will also lose power to starter and Sound-Gard Body circuits.

2. If breaker is not tripped, remove left cowl and disconnect multiple connector from instrument cluster.

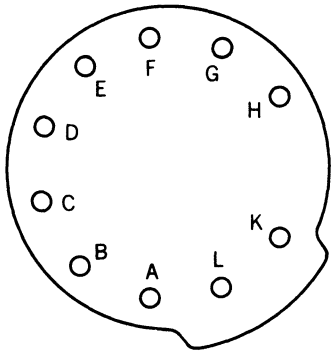

A—Not Used
B—To Transmission Oil Sender
C—To Terminal G of Key Switch
D—To Air Cleaner Sender
E—To Engine Temperature Sender
F—To IGN Terminal of Key Switch
G—To Ground
H—To Fuel Sender
K—To Engine Oil Pressure Sender
L—To HD Terminal of Light Switch

Fig. 5-Multiple Connector Terminal Usage

3. Turn key switch on. Use voltage detector, voltmeter, or test lamp to test for battery voltage at terminal F of multiple connector. If terminal does not have voltage, check for poor connection at key switch or circuit breaker or for a defective key switch.

4. Use voltage detector, ohmmeter, or test lamp to make sure terminal G of multiple connector provides a good ground. If not, check for a poor connection at ground screw near circuit breakers or at ground wire at front left-hand Sound-Gard Body mount.

Testing—Continued

If a single gauge malfunctions, either that gauge or its sending unit is probably defective.

NOTE: For fuel, water, and oil pressure gauge and sending unit resistance checks, see page 40-10-7.

TESTING VOLTMETER

IMPORTANT: Never ground terminal F on a gauge (shielded terminals on back of instrument cluster). To do so would destroy printed circuit board.

Voltmeter has only two terminals. Indicator should rise to left edge of solid green band with 11.8 volts applied to terminal F and terminal G grounded. With 13 volts, it should point straight up. With 15.5 bolts, it should reach right edge of solid green band.

If a gauge does not read correctly with tester connected directly to gauge terminals, replace gauge.

If gauge does read correctly, check carefully for a poor connection or open circuit between gauge and sender. Problem could be in sender wire terminal, bulkhead connector, multiple connector at cluster, or printed circuit board.

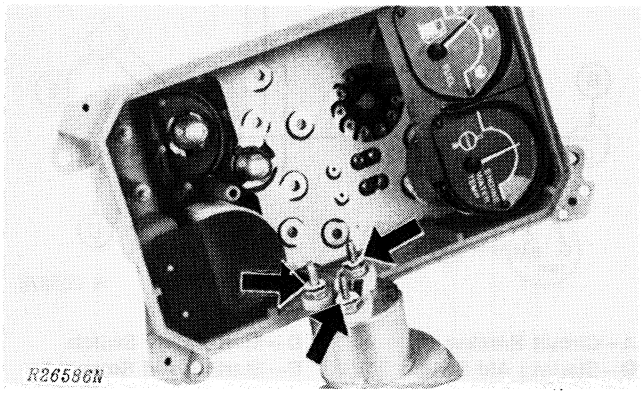

Fig. 8-Spring Washers

Gauge terminals must have spring washers to make contact with printed circuit board, as shown in Fig. 8.

Indicator Lamps

1. Make sure both lamps glow when key switch is in start position. A test circuit is provided through terminal C of multiple connector and terminal G of key switch. Power source is ignition terminal of key switch, through terminal F of multiple connector.

If lamps do not glow, check for a defective bulb, poor connection, poor ground at key switch, or open diode on printed circuit board.

2. Remove wire from sender, and touch it to ground. With key switch on, lamp should glow when wire is grounded. If it doesn't, check for poor connection, open circuit, or defective bulb.

3. Test sending units. Air cleaner indicator sender is normally open and should close at 24 to 26 inches (500 to 640 mm) of water. Measure with a water manometer as instructed in Section 30.

Early tractors use a two-terminal switch with a ground wire. Later tractors use a single-terminal, self-grounding switch.

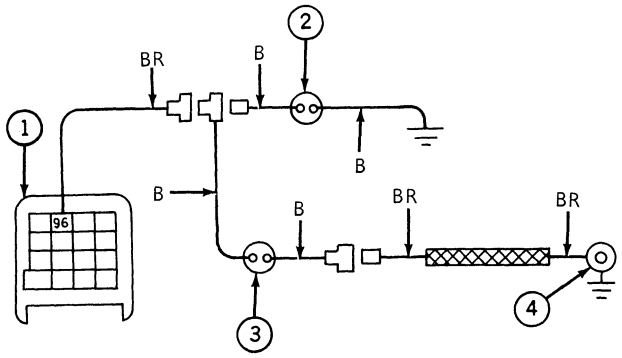

1—Bulkhead Connector
2—System Pressure
3—Clutch Engaging Oil Pressure
4—Transmission Lube Pressure
B —Black
BR—Brown

Fig. 9-Transmission Oil Indicator Lamp Switches On Early Tractors

Three switches are used in the transmission oil indicator lamp circuits. Early tractors use a single lamp to signal a loss of either hydraulic system pressure or transmission lube pressure.

The first switch measures hydraulic system pressure. It is mounted on the clutch oil filter relief valve housing. It is normally closed and opens at 150 psi (10 bar).

A second switch measures transmission lube pressure. It is mounted on the transmission case, toward the rear on the right-hand side. It is normally closed and opens at 5 to 8 psi (0.4 to 0.6 bar). On later models it opens at 2 to 6 psi (0.14 to 0.42 bar).

The third switch is connected in series with the second. It is mounted on the pressure regulating valve housing, and it senses clutch engaging oil pressure. It is normally open and closes at 150 psi (10 bar).

The purpose of the third switch is to sense when the clutch is disengaged and then disconnect the second switch. Otherwise, the indicator light would glow any time the clutch was disengaged, since the transmission lubricating pump runs only when the clutch is engaged.

When the indicator light is glowing, a quick check will show whether system pressure or lubrication pressure has been lost. Depressing the clutch pedal should make the lamp go out if it is signaling a loss of lube pressure, but not if it is signaling a loss of system pressure.

Indicator Lamps—Continued

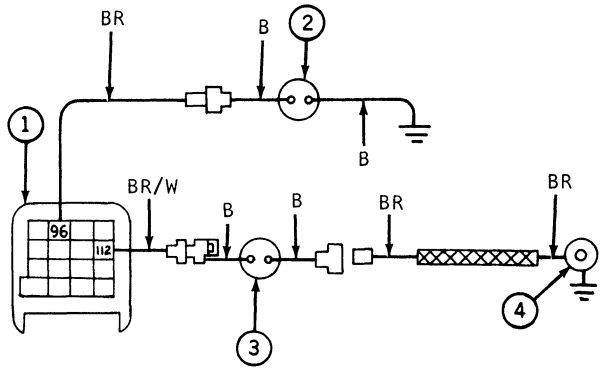

1—Bulkhead Connector
2—System Pressure
3—Clutch Engaging Oil Pressure
4 —Transmission Lube Pressure
B —Black
BR—Brown

Fig. 10-Transmission Oil Indicator Lamp Switches On Later Tractors

Later tractors use a separate warning lamp for transmission lube pressure. They use the same switches, but have two circuits instead of one. (See Fig. 10.)

Assembly

If cluster is disassembled, make sure each gauge terminal has a spring washer to make contact with printed circuit board.

Install glass with blue coated surface inward.

Install a new gasket. Turn smooth side inward, and make sure it will seal across both glass and cluster case.

ACCESSORIES

Electric Starting Aid

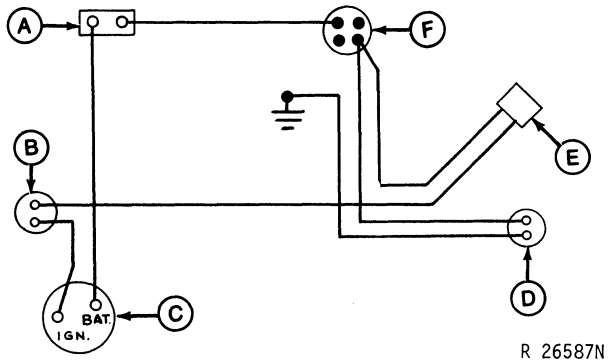

A—Circuit Breaker
B—Starting Aid Switch
C—Key Switch
D—Start-Safety Switch
E—Starting Aid Solenoid
F—Starter Circuit Relay

Fig. 11-Electric Starting Aid Circuit

Electric starting aid will operate only if key switch is on and transmission is in neutral or park. It should be used only when engine is cranking and only in short bursts.

Wiring is in instrument harness and engine harness. Power comes from 10-amp circuit breaker to key switch. When switch is turned on, blue wire to starting aid switch should be hot.

White wire goes through bulkhead connector to starting aid solenoid. Solenoid is grounded at screw near starter circuit relay, but only when start-safety switch is closed.

Solenoid should engage at voltages down to 4 volts and should release within 0.1 second when switch is released. Current draw should be 4 to 5 amps at 12 volts.

IMPORTANT: Always keep a starting fluid can in place to prevent drawing dirt into engine.

Horn

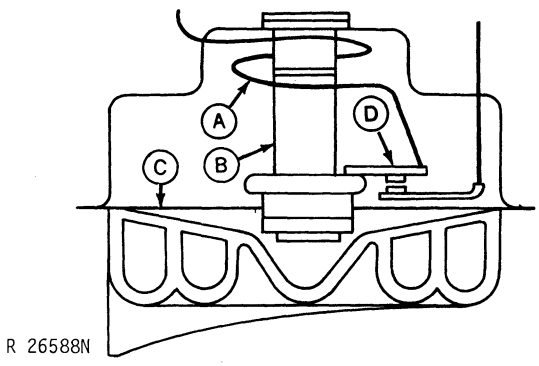

A—Solenoid **C—Diaphragm**
B—Plunger **D—Contact Points**

Fig. 12-Horn

When horn is energized, solenoid (A, Fig. 12) pulls plunger (B) attached to diaphragm (C). Movement of plunger opens contact points (D), opening circuit to solenoid and releasing plunger. As plunger returns, it closes contact points and starts cycle over, setting up a rapid vibration.

Horn has no provision for adjustment or servicing. Test procedures are outlined in following paragraphs.

1. See if lighter works. If not, check for a tripped circuit breaker or poor connection.

2. With horn button depressed, tap on horn. If horn operates, release button and try it again. If horn now works normally, problem was apparently due to foreign matter between points, and no further service is needed.

If horn must be tapped each time to start it, points are defective. Horn must be replaced.

3. Disconnect horn lead and connect an ammeter to the disconnected ends. With key switch on, depress horn button and check current draw.

If current draw is high (20 amps or more), points are defective. Horn must be replaced.

If current draw is zero, use voltage detector, voltmeter, or test lamp to test for battery voltage at horn lead. Use voltage detector, ohmmeter, or test lamp to make sure ground wire provides a good ground. If both circuits check out, solenoid has open circuit or points are stuck open. In either case, horn must be replaced.

Radio and Tape Player

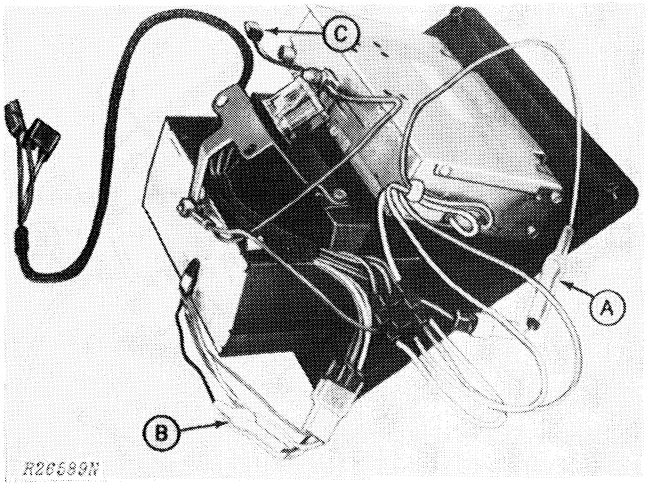

A—Radio Fuseholder **C—To Ground**
B—Tape Player Fuseholder

Fig. 13-AM-FM Multiplex Radio and Tape Player Assembly

Radio and tape player have 5 amp fuses (A and B, Fig. 13).

To gain access to radio fuse on radio without tape player, remove the six screws. Radio and grille are removed as a unit.

To gain access to a fuse on a radio and tape player, open Sound-Gard Body roof. Remove the two radio and tape player assembly mounting screws from the top side of the inner roof. Then remove the six screws from grille. Lower radio and tape player assembly.

Electrical Connections

Dual speakers are installed in all tractors at the factory. When installing radio or tape player, make the following electrical connections.

1. AM-FM radio — Connect radio wiring (A, Fig. 14) directly to speaker harness (B).

2. AM radio — Connect AR73923 two-to-three wire adapter (C) between radio wiring and speaker harness.

3. Tape player — Connect radio wiring, tape player wiring (D), relay, and speaker harness to radio and tape player harness (E). Use AR60557 harness with AM radio or AR69589 harness with AM-FM radio.

Electrical Connections—Continued

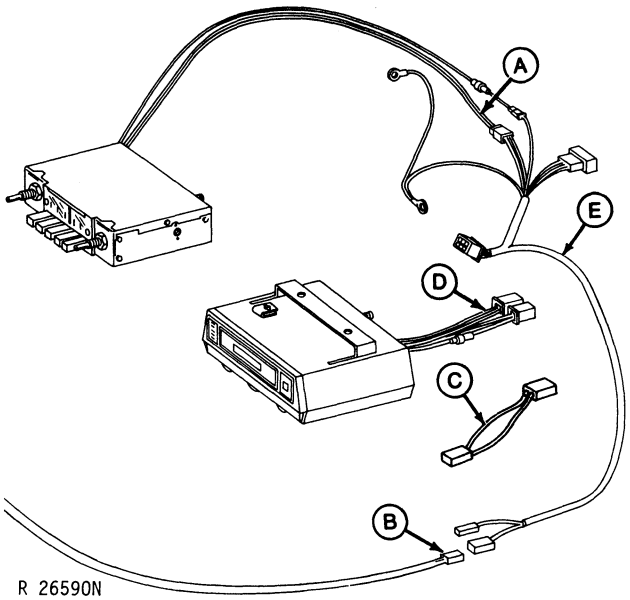

A—Radio Wiring
B—Speaker Harness
C—Two-to-Three Wire Adapter
D—Tape Player Wiring
E—Radio & Tape Player Harness

Fig. 14-Radio and Tape Player Electrical Connections

4. Connect power in (fused) wire to brown wire in Sound-Gard Body harness.

5. To assure a good ground, make a ground wire with an eyelet on one end and an R32025 male blade connector on the other. Connect to radio chassis and to black wire in Sound-Gard Body harness.

Antenna Trimmer

If AM radio reception seems poor, adjust antenna trimmer capacitor screw. To do so, select a weak station near 1400 and adjust trimmer screw to obtain maximum volume.

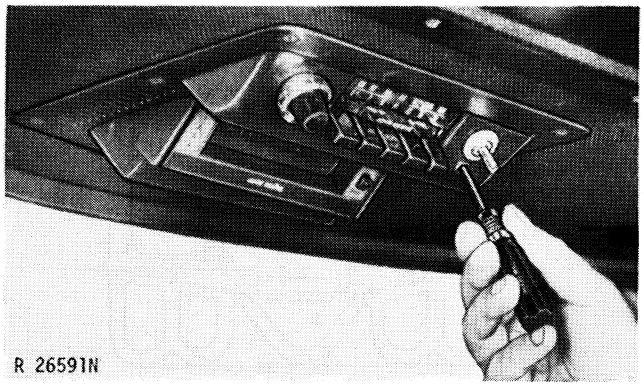

Fig. 15-Adjusting Antenna Trimmer Capacitor Screw on Motorola Radio

On Motorola radio, screw is located behind tuning knob. Remove tuning knob and the knob behind it. Insert a screw driver in small hole below tuning shaft to adjust trimmer.

On Boman radio, trimmer screw is on bottom of radio. For access to screw, remove plastic bezel.

FM portion of an AM-FM radio does not have an antenna trimmer capacitor. When stereo FM signal is weak, radio automatically switches to monaural reception.

NOTE: If radio works on FM but not on AM, check for a poor connection to antenna.

Relay

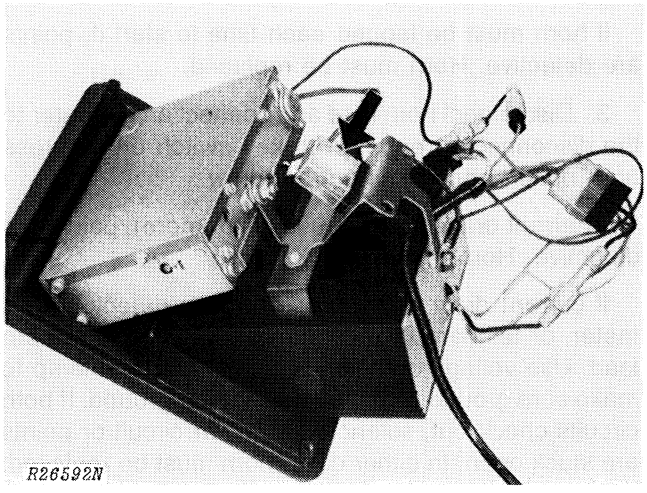

Fig. 16-Relay

When a tape cartridge is inserted into tape player, it engages a relay (Fig. 16). Relay opens circuit to radio to prevent radio operation while tape is playing.

Relay plugs into a multiple connector. To remove relay, slide bail off side and pull relay straight out. Never exert excessive force on relay mounting bracket.

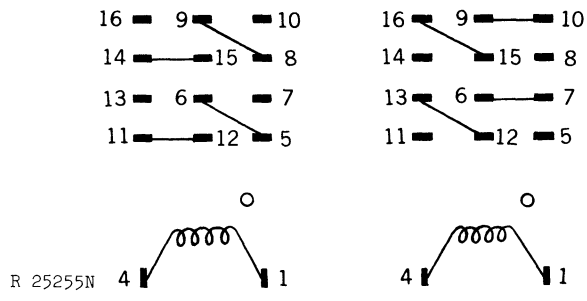

No Winding Current Radio Operation **Windings Energized Tape Player Operation**

Fig. 17-Relay Terminal Continuity

Fig. 17 shows relay terminal continuity without tape in slot (left-hand) and with tape in slot (right-hand).

Noise Suppression

Three kits are available to reduce radio interference from electrical components.

If blower motor noise is the problem, install AR78446 Blower Noise Suppression Kit.

If wiper motor noise is the problem, install AR71569 Wiper Noise Suppression Kit.

If reception is poor and source of interference is not known, install AR75563 Fender Mounted Antenna Kit.

All necessary materials and instructions are included in each kit.

Left-Hand Wiper

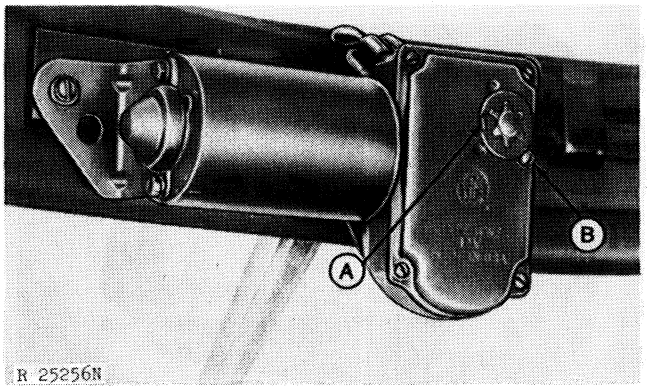

A—Park Adjusting Disk **B—Lock Screw**

Fig. 18-Left-Hand Wiper Motor

Failure to stop when wiper switch is turned off could be due to faulty park adjustment or to a short circuit between wires.

NOTE: Wet windshield or remove wiper arm before running wiper motor. This minimizes load on motor and prevents scratching windshield.

To adjust park mechnaism, loosen lock screw (B, Fig. 18). Rotate park adjusting disk (A) clockwise (move tab upward) until wiper runs continuously with switch turned off. Rotate disk counterclockwise just enough so that wiper stops in park. Then rotate disk counterclockwise just slightly more for insurance. Tighten lock screw.

IMPORTANT: Never manually move wiper arm. To do so would damage drive gear teeth and might ruin motor.

When connecting wiring to wiper, connect green wire to lower terminal, red wire to terminal next to motor, and black wire to terminal next to wiper shaft.

Left-hand wiper motor should draw approximately 2 to 3 amps on low speed and 3 to 4 amps on high speed.

If motor will not operate, either of two circuit breakers might be tripped — 20-amp breaker in electrical load center (radio would not operate) or the six-amp breaker mounted on wiper switch. In either case, breaker should reset if key switch is turned off for at least two minutes.

See page 10 for circuit checks at wiper switch. If switch terminals have proper voltage, check for a poor connection in wiper harness or a defective motor.

Right-Hand Wiper

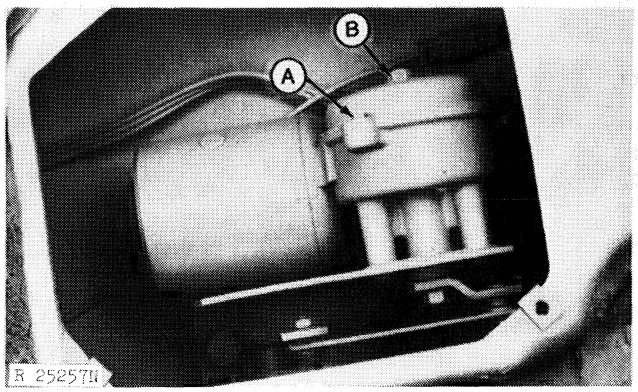

A—Retaining Screws **B—Nylon Hex Stud**

Fig. 19-Right-Hand Wiper Motor

To adjust wiper park position:

1. Open Sound-Gard Body roof and remove wiper motor cover.

2. Loosen two lower retaining screws (A) on round cover.

3. Turn nylon hex stud clockwise so wiper blade will travel farther on upstroke or counterclockwise so blade will stop sooner.

NOTE: Wet windshield or remove wiper arm before running wiper motor. This minimizes load on motor and prevents scratching windshield.

4. Tighten cover screws after adjustment.

IMPORTANT: Never manually move wiper arm. To do so would damage drive gear teeth and might ruin motor.

When connecting wiring to wiper motor, connect wires of same color together.

Right-hand wiper motor should draw approximately 2 to 3 amps on low speed and 3 to 4 amps on high speed. With wiper arm removed, current draw should be only half this much.

If motor will not operate, either of two circuit breakers might be tripped—20-amp breaker at electrical load center or the six-amp breaker mounted on wiper switch. In either case, breaker should reset if key switch is turned off for at least two minutes.

See following paragraphs for circuit checks at wiper switch. If switch terminals have proper voltage, check for a poor connection in wiper harness or a defective switch.

Wiper Switch

A six-amp circuit breaker is attached to each wiper switch.

Each switch is also protected by a 20-amp breaker at the electrical load center, but several changes were made in arrangement of circuit breakers from early to late tractors. See Group 5 for diagrams.

Any of the breakers should reset if key switch is turned off for at least two minutes. If it will not, replace breaker.

Testing

1. Remove all five switch knobs. Remove bezel covering switches.

2. Remove retaining nut from wiper switch. Pull switch down from roof.

3. Leave power in wire attached to circuit breaker, but disconnect other three wires.

4. With key switch turned on, use voltage detector voltmeter or test lamp to test for battery voltage at unprotected terminal of circuit breaker. If terminal does not have voltage, check for a tripped circuit breaker at electrical load center, a poor connection, or an open circuit.

5. If unprotected terminal has voltage, test protected terminal. If it does not have voltage, replace switch.

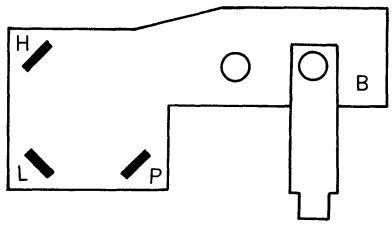

R 26593N

Fig. 20-Wiper Switch Terminals

6. If protected terminal has voltage, test for voltage at other three terminals as follows.

Switch in off position — terminal P.
Switch in low position — terminal L.
Switch in high speed position — terminal H.

Replace switch if any terminal does not have voltage when it should.

A tripped circuit breaker or poor connection can sometimes carry enough current to indicate voltage, yet be unable to carry a load. To double check, connect a headlight or other suitable load to terminal and a good ground.

Blower Switch (Early Tractors)

NOTE: See page 12 for tractors with Sound-Gard Body serial number (167884-).

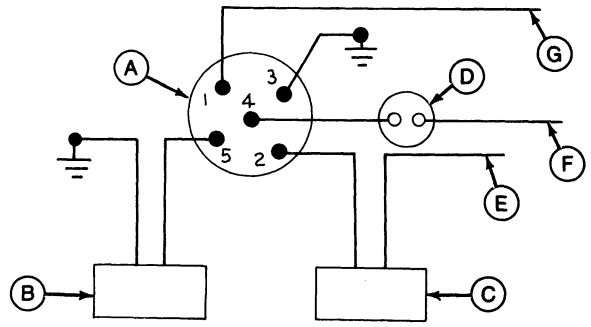

R 26594N

A—Blower Switch
B—Left-Hand Blower Motor
C—Right-Hand Blower Motor
D—Thermostat Switch
E—From Circuit Breaker No. 6
F—To Air Conditioner Compressor
G—From Circuit Breaker No. 5

Fig. 21-Schematic Diagram of Blower Circuit

Blower switch (A, Fig. 21) connects blower motors (B and C) in series for low speed. Switch provides a separate 12-volt circuit for each motor for high speed.

Left-hand motor is grounded at all times. Right-hand motor is "hot" any time key switch is turned on.

For low speed, switch simply connects the two motors (continuity between terminals 2 and 5).

For high speed, switch provides a power source for left-hand motor (continuity between terminals 1 and 5) and a ground for right-hand motor (continuity between terminals 2 and 3).

In both high and low speeds, switch also provides a power source to air conditioner thermostat (continuity between terminals 1 and 4).

Testing

1. Power source for blower switch is a short brown wire from left-hand wiper switch. If left-hand wiper works, there is no need to check circuit up to that point. If not, check for tripped circuit breaker, poor connections, or an open circuit.

2. Power source for right-hand blower motor is red wire from Sound-Gard Body harness. The same wire loops back into harness and goes to right-hand wiper switch. If right-hand wiper works, there is no need to check circuit up to that point. If not, check for tripped circuit breaker, poor connections, or an open circuit.

3. Remove all five switch knobs. Remove bezel covering switches.

4. Remove retaining nut from blower switch.

5. Pull switch down from roof and disconnect all wires.

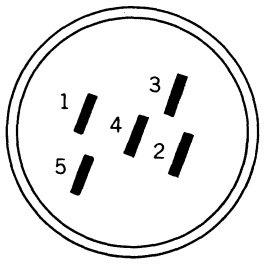

R 26595N

Fig. 22-Blower Switch Terminals

6. Use an ohmmeter or test lamp to test for continuity between the following switch terminals.

Switch Position	Terminals with Continuity
Off	None
Low	1 and 4
	2 and 5
High	1 and 4
	1 and 5
	2 and 3

Replace switch if continuity does not check out as specified.

Testing—Continued

7. Reconnect wires as follows.
   Terminal 1 — Brown
   Terminal 2 — Orange (to right-hand blower motor)
   Terminal 3 — Black
   Terminal 4 — Orange (to thermostat)
   Terminal 5 — Yellow
8. Check operation of switch. If correct, reinstall switch, bezel, and knobs.

Blower Switch (Later Tractors)

NOTE: See page 11 for tractors with Sound-Gard Body serial number (-167883).

Tractors with Sound-Gard Body serial number (167884-) have a single blower motor, three-speed switch, and a resistor to control blower speed.

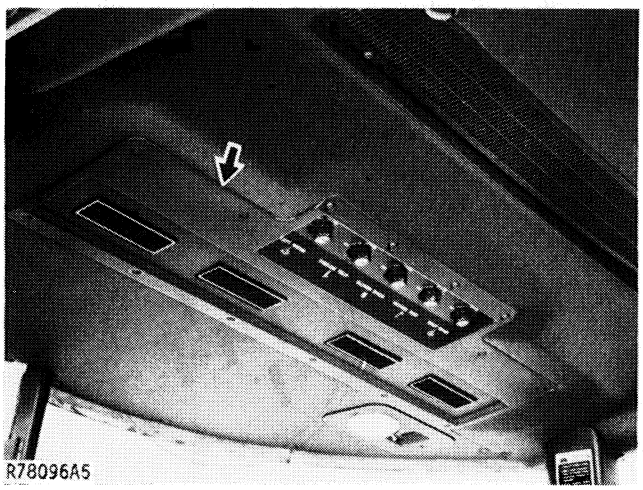

Fig. 23-Bezel

1. Remove bezel covering switches.

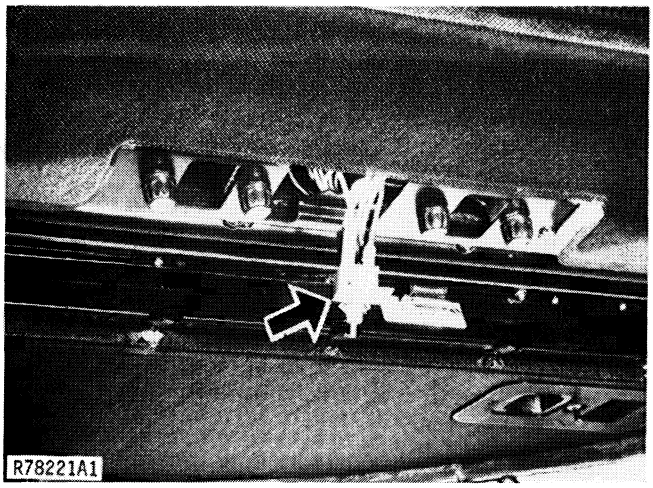

Fig. 24-Blower Switch

2. Remove knob and retaining nut from blower switch. Pull switch down, but do not disconnect wires.

3. Power source is red wire to "B" terminal. With key switch on, check terminal for battery voltage. If wire does not have voltage, check for problem in lower rear circuit breaker (30-amp), accessory relay, or wiring harnesses.

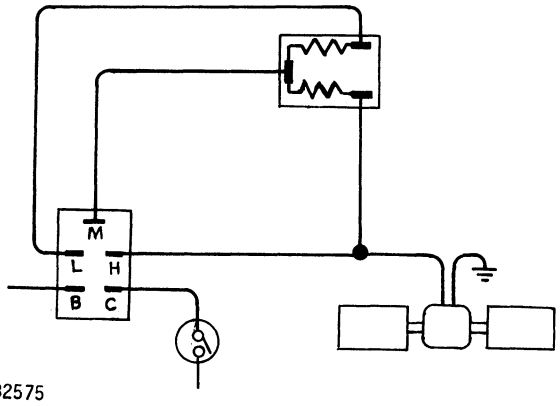

Fig. 25-Blower Circuit

4. Use an ohmmeter to check resistance between "B" and "H" terminals in each switch position. Resistance should be as follows:
   off — no continuity
   low — about 1.0 ohm
   med. — about 0.5 ohm
   high — 0 ohm

5. If resistance is not correct, disconnect wires and test switch for continuity between the following terminals. Replace switch if continuity is not correct.
   off — no continuity
   low — "B" to "L" and "C"
   med. — "B" to "M" and "C"
   high — "B" to "H" and "C"

6. If resistance is not correct in Step 4 but switch continuity is correct in Step 5, check for a defective resistor. Use an ohmmeter to check resistance between wires disconnected from blower switch.
   between yellow and tan wires — about 0.5 ohm
   between yellow and light blue wires — about 1.0 ohm

Replace resistor if it is shorted or open. For access to resistor, open Sound-Gard body roof and remove right-hand wiper cover.

NOTE: Resistor is protected by a thermal fuse. If fuse blows, blower motor will run only in high speed. When this happens, resistor must be replaced.

7. Connect wires to blower switch as follows:
"B" terminal — red
"L" terminal — light blue
"M" terminal — tan
"H" terminal — yellow
"C" terminal — orange (to cooling temperature switch)

Blower Motor (Later Tractors)

When installing blower motor, take care to properly install fans on blower motor shaft, properly install motor in housing, and properly connect wiring. Otherwise, airflow would be greatly reduced.

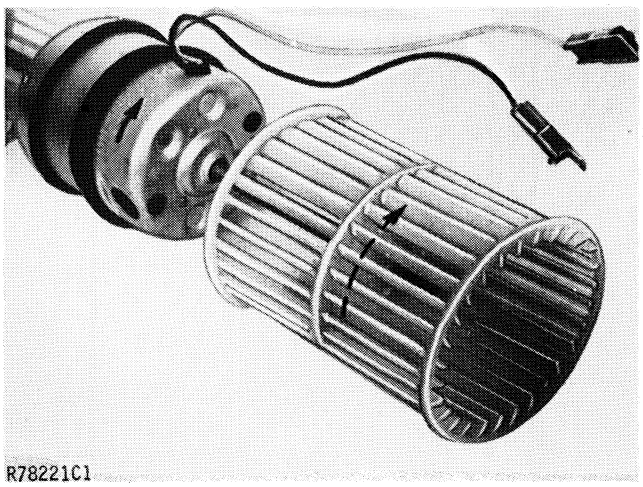

Fig. 26-Rotation Direction Marks

1. Note rotation direction marks on motor and on fans. Install fans so that all arrows point in same direction.

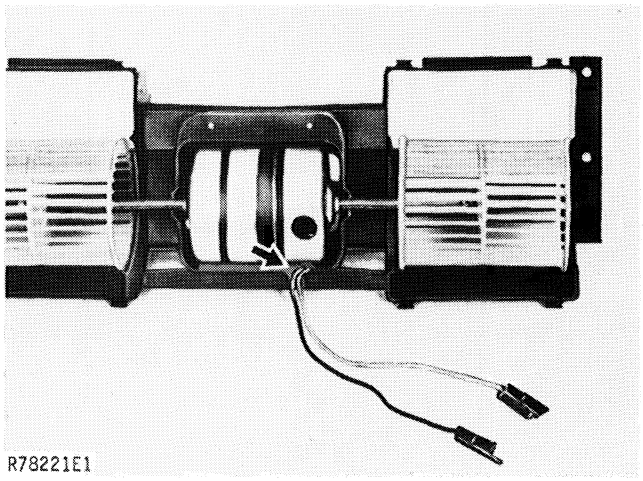

Fig. 27-Notch for Wires

2. Install motor in housing with wires next to notch in lower half of housing.

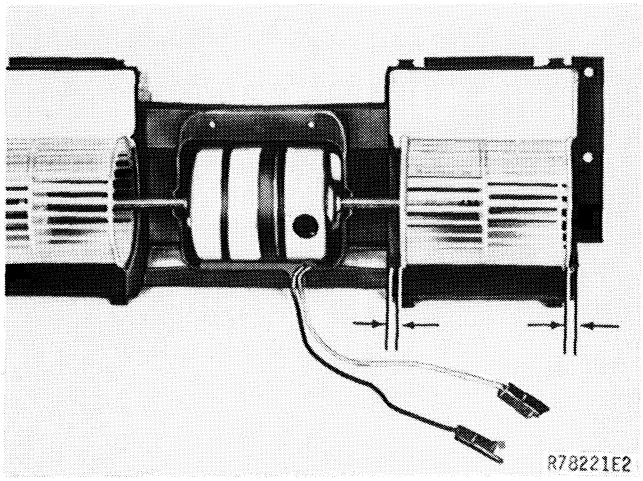

Fig. 28-Centering Fans in Housing

3. Make sure that fans turn freely, and center them in the housing. If necessary, slide fans slightly on shaft.

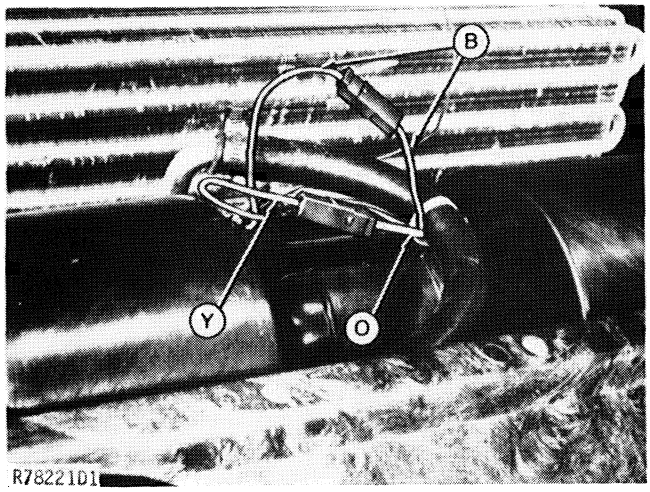

B—Black **Y—Yellow**
O—Orange

Fig. 29-Wiring Connections

4. Connect black to black and yellow to orange. Otherwise, motor would run backward.

ADDITIONAL ACCESSORIES

If additional accessories draw less than five amps, they may be connected to the protected terminal of circuit breaker which is second from top on left side.

Heavier loads should be provided with a separate circuit breaker, similar to arrangement for outlet socket. See Group 45.

Litho in U.S.A.

Group 45
REMOTE ELECTRICAL CIRCUITS
ELECTRICAL REMOTE CONTROL (Optional)

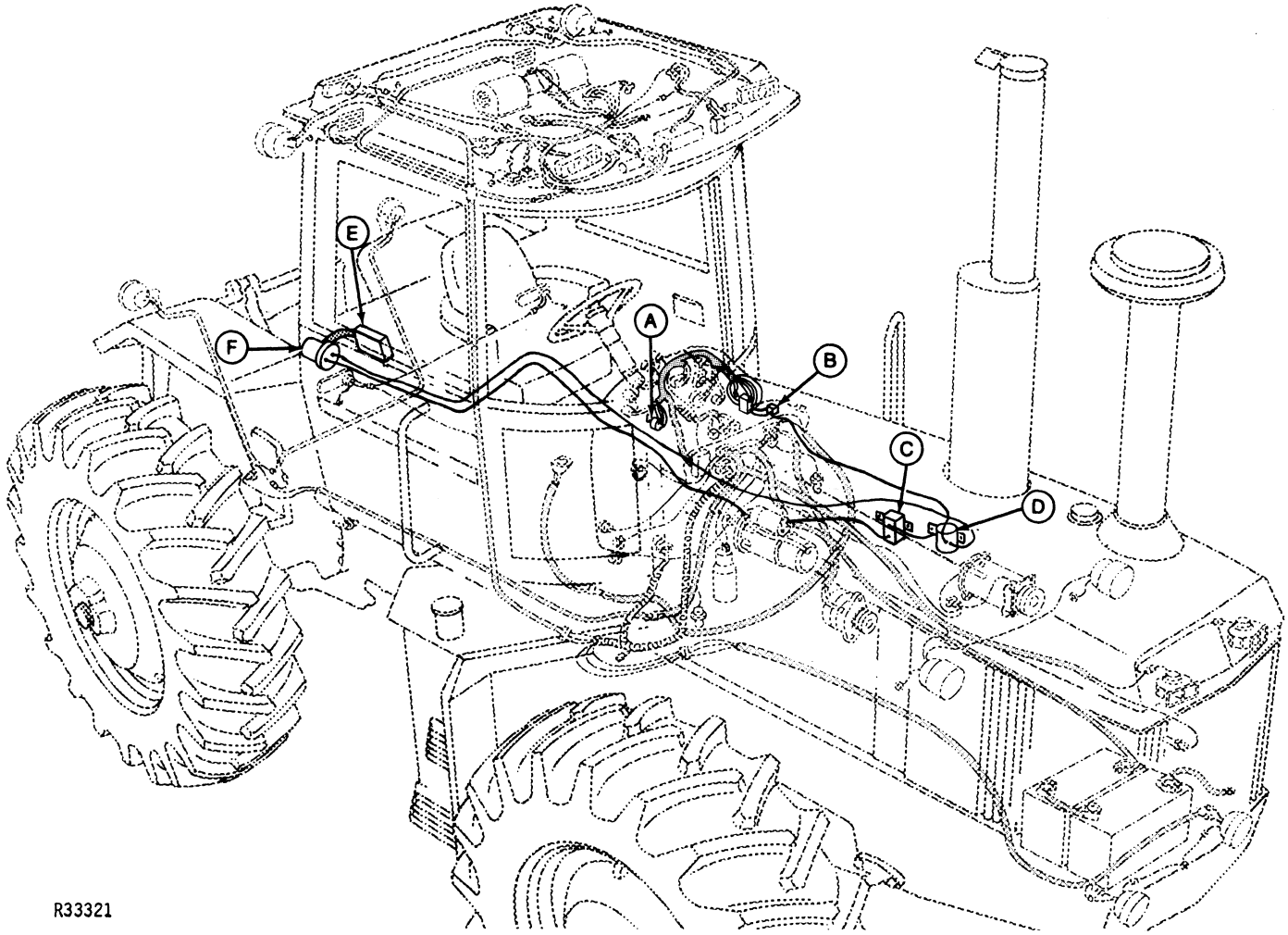

A—Key Switch
B—Sound-Gard Body Relay
C—Circuit Breaker
D—Relay
E—Switch Box
F—Connector

Fig. 1-Electrical Remote Control Components

ELECTRICAL REMOTE CONTROL—Continued

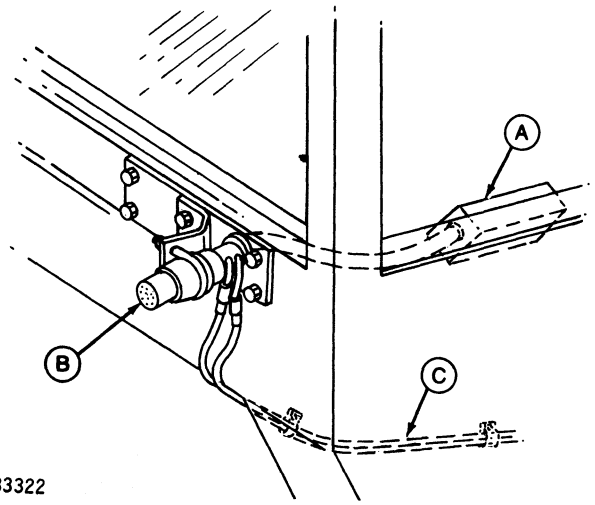

A—Control Box
B—Connector
C—Power and Ground Wires

Fig. 2-Control Box and Connector

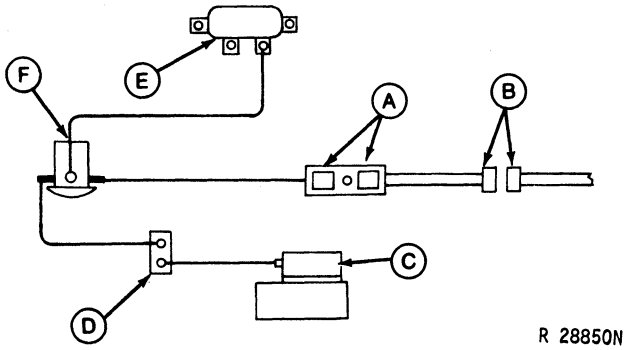

A—Switches
B—Connector
C—Starter
D—Circuit Breaker
E—Sound-Gard Body Relay
F—Remote Control Relay

Fig. 3-Electrical Remote Control Wiring

For a power supply, electrical remote control is connected to positive battery terminal on starter solenoid (C, Fig. 3).

A 25-amp circuit breaker (D) provides overload protection.

A wire from Sound-Gard Body relay (E) activates remote control relay (F) when key switch is turned on.

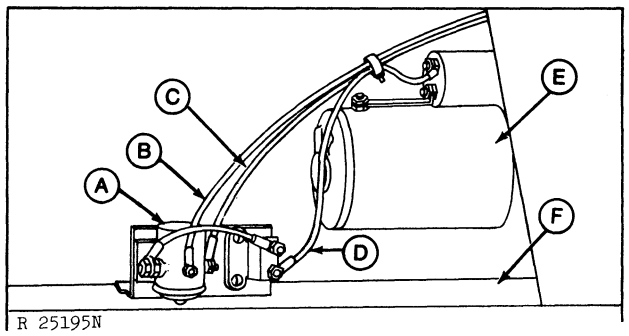

A—Relay
B—To Sound-Gard Body Relay
C—To Remote Control R-1
D—From Starter
E—Starter
F—Side Frame

Fig. 4-Relay and Circuit Breaker Connections

Fig. 4 shows the relay and circuit breaker connections. When replacing a relay, the terminals and cap should be positioned downward.

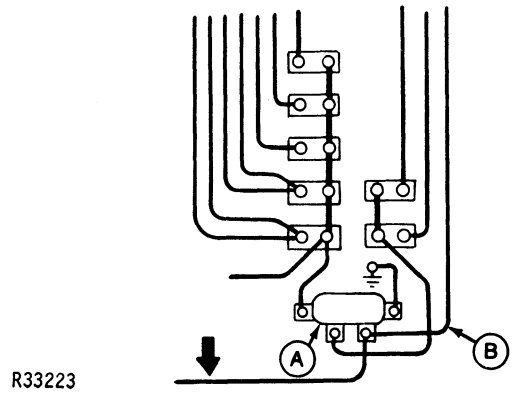

A—Sound-Gard Body Relay
B—Purple Wire from Key Switch

Fig. 5-Connection at Electrical Load Center

Connect sensing wire to purple wire from key switch near the Sound-Gard body relay. This closes remote control relay when key switch is turned on, providing power to control box.

Figs. 6 and 7 indicate terminal locations, wire colors, and circuit numbers.

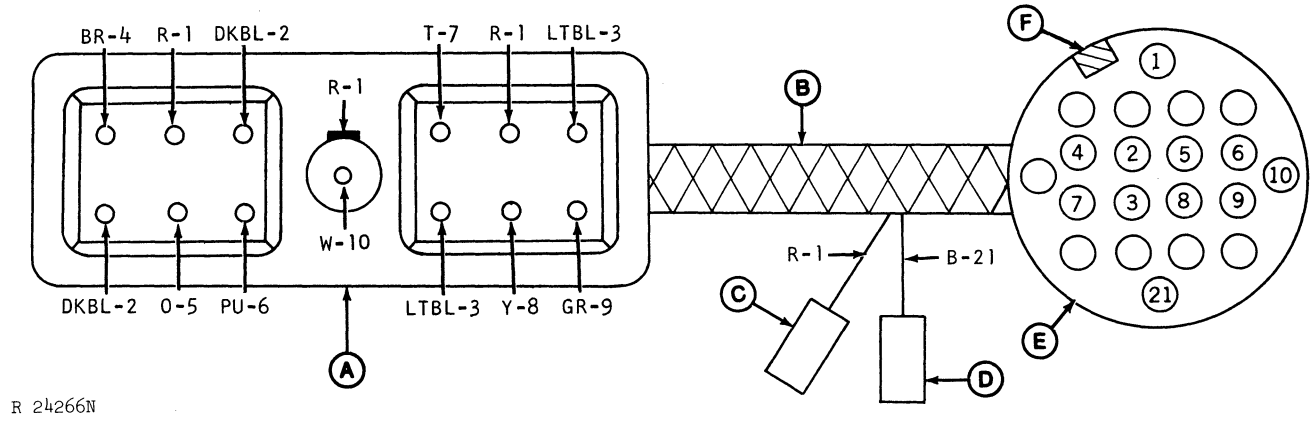

A—Front View of Lower Switch Box
B—Harness
C—To Current Source
D—To Ground
E—Female Plug
F—Locating Keyway

Wire Colors:

B	- Black	PU	- Purple
BR	- Brown	R	- Red
DKBL	- Dark Blue	T	- Tan
GR	- Green	W	- White
LTBL	- Light Blue	Y	- Yellow
O	- Orange		

Fig. 6-Single Switch Box

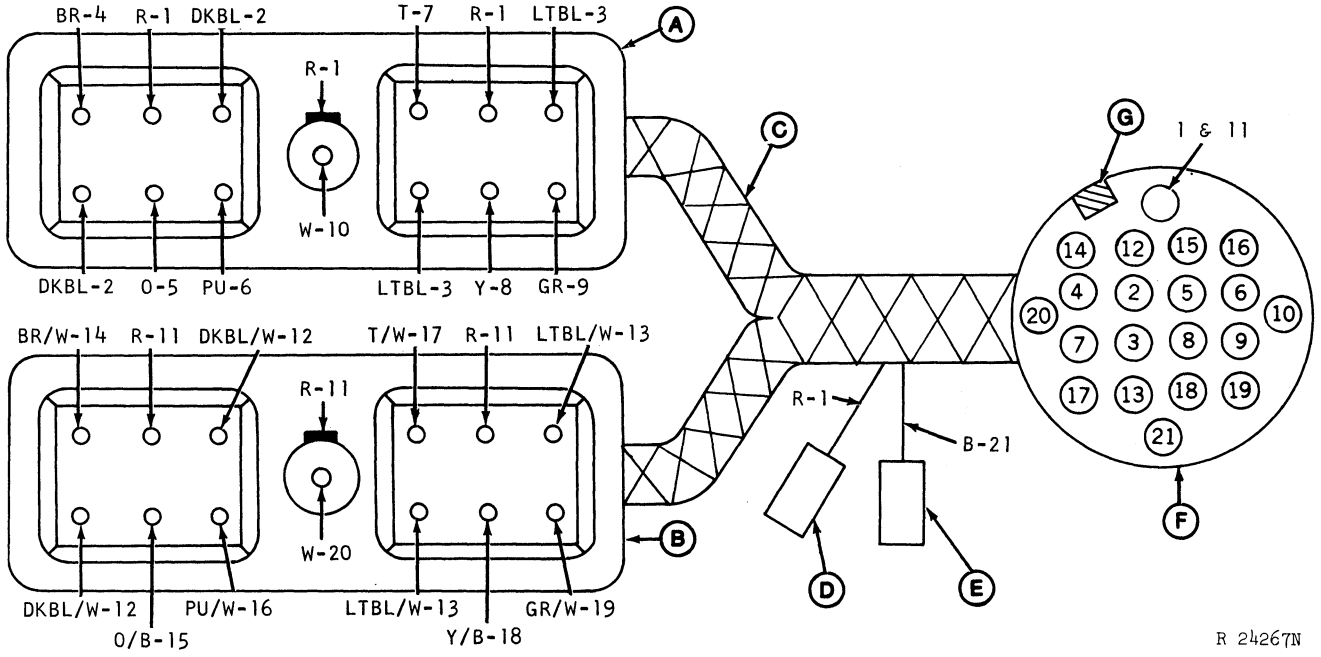

A—Front View of Upper Switch Box
B—Front View of Lower Switch Box
C—Harness
D—To Current Source
E—To Ground
F—Female Plug
G—Locating Keyway

Wire Colors:

B	- Black	PU	- Purple
BR	- Brown	R	- Red
DKBL	- Dark Blue	T	- Tan
GR	- Green	W	- White
LTBL	- Light Blue	Y	- Yellow
O	- Orange		

Fig. 7-Dual Switch Box

ELECTRICAL REMOTE CONTROL—Continued

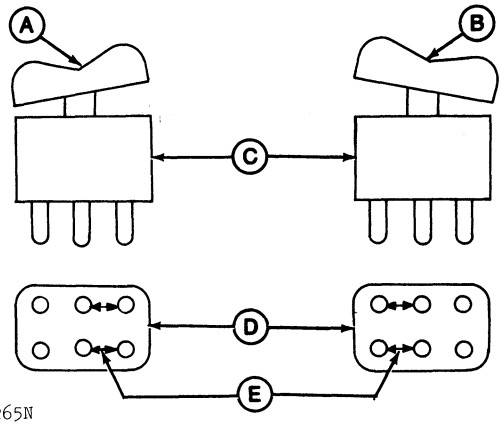

A—Left Switch Position
B—Right Switch Position
C—Side View
D—End View
E—Continuity

Fig. 8-Rocker Switch Continuity

Fig. 8 shows which terminals have continuity when a rocker switch is depressed. Both momentary (AR49797) and detent (AR49798) switches are available.

To prevent dust accumulation, install an R48049 plug in any unused switch location.

Testing

1. Turn key switch on.

2. Use voltage detector, voltmeter, or test lamp to test for battery voltage at terminal 1 of remote control connector.

3. Use voltage detector, ohmmeter, or test lamp to make sure that terminal 21 provides a good ground.

4. Connect a headlight or other suitable load to terminals 1 and 21. A poor connection or tripped circuit breaker might pass enough current to indicate voltage, yet be unable to carry a load.

5. Use voltage detector, voltmeter, or test lamp to test for battery voltage at the terminals listed in the chart below.

6. Use an ohmmeter or test lamp to test for continuity between the terminals listed in the chart below.

The 25-amp circuit breaker should trip in 20 to 50 seconds when carrying a 38-amp load.

The circuit breaker should reset itself, but only after the load is removed. A heater element keeps the breaker tripped as long as the load is connected.

To reset the breaker, turn all electrical remote control switches off. Wait at least two minutes before trying the circuit again.

If this doesn't reset the breaker, turn the key switch off for at least two minutes. If breaker does not reset, breaker is defective. If it does reset, check carefully for a short circuit in the wiring.

VOLTAGE AND CONTINUITY TEST

Switch	Switch Position	Terminals with Voltage		Continuity Between Female Plug Terminals	
		Single Box	Dual Box	Single Box	Dual Box
All	Off	1, 10	1, 10, 20	—	—
Top left	Left	1, 2, 10	1, 2, 10, 20	5-6	5-6
Top left	Right	1, 4, 10	1, 4, 10, 20	2-5	2-5
Top right	Left	1, 3, 10	1, 3, 10, 20	8-9	8-9
Top right	Right	1, 7, 10	1, 7, 10, 20	3-8	3-8
Bottom left	Left	—	1, 10, 12, 20	—	15-16
Bottom left	Right	—	1, 10, 14, 20	—	12-15
Bottom right	Left	—	1, 10, 13, 20	—	18-19
Bottom right	Right	—	1, 10, 17, 20	—	13-18

OUTLET SOCKET (OPTIONAL)

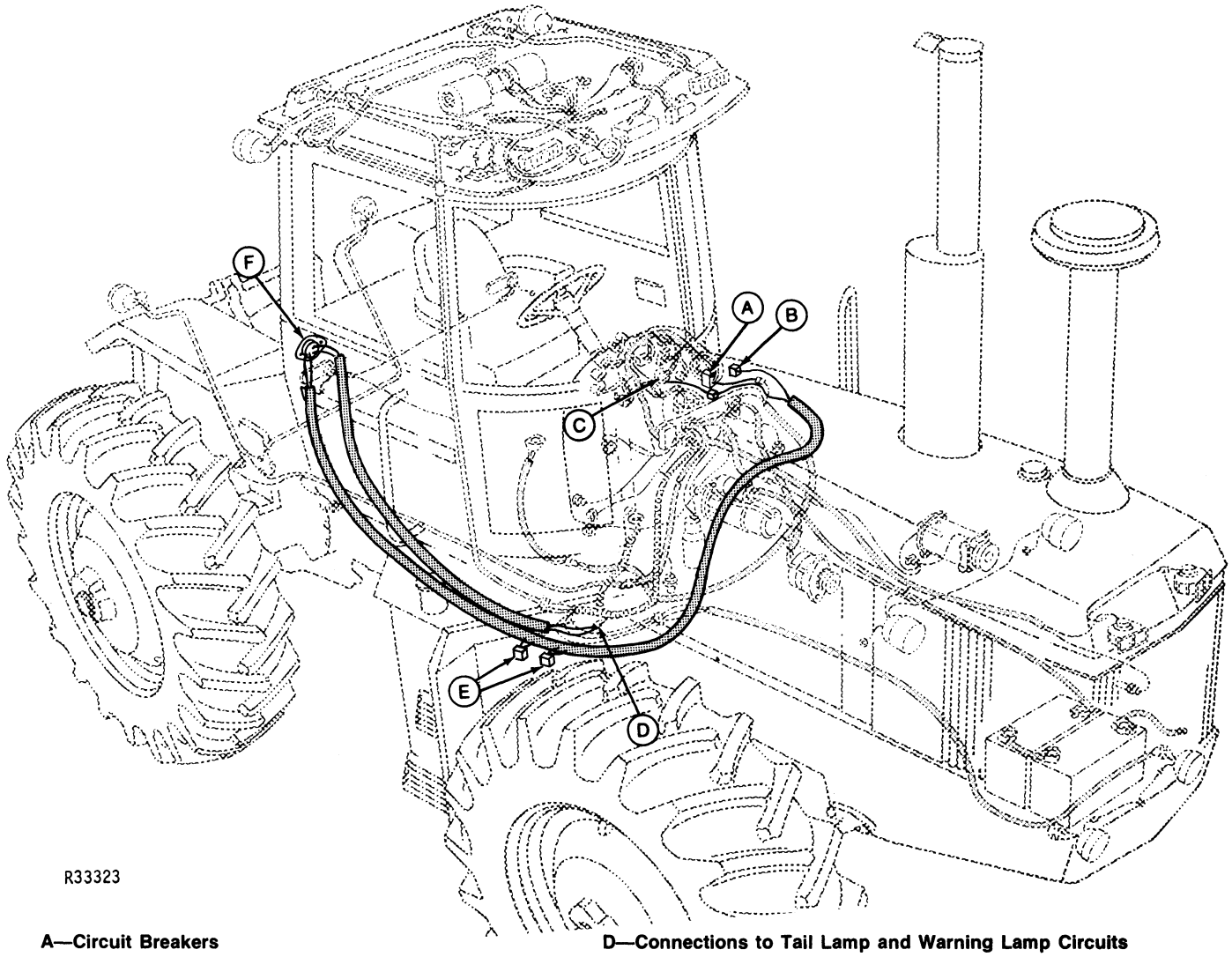

A—Circuit Breakers
B—Relays
C—Connection to Flood Lamp Circuit
D—Connections to Tail Lamp and Warning Lamp Circuits
E—Connectors for Switches or Patchcords
F—Outlet Socket

Fig. 9-Outlet Socket Wiring

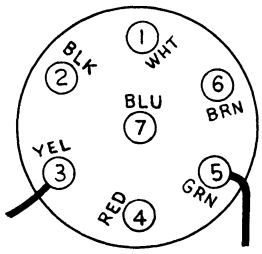

1—Ground
2—Work Lights (20-Amp)
3—Left Turn
4—Auxiliary Power (20-Amp)
5—Right Turn
6—Tail Lamps
7—Auxiliary Power (10-Amp)

Fig. 10-Outlet Socket Connections Viewed from Wire End of Connector

A seven-terminal outlet socket is available for connecting lights, turn signals, and other remote electrical equipment. Standard terminal usage is indicated in Fig. 10, but other applications may be used.

NOTE: Colors stamped on connector terminals are standard colors for trailer wiring. In order to match color of tractor wiring where each circuit ties in, three wires to connector differ from the standard. See Fig. 11.

Switches may be added in circuits to Terminals 4 and 7.

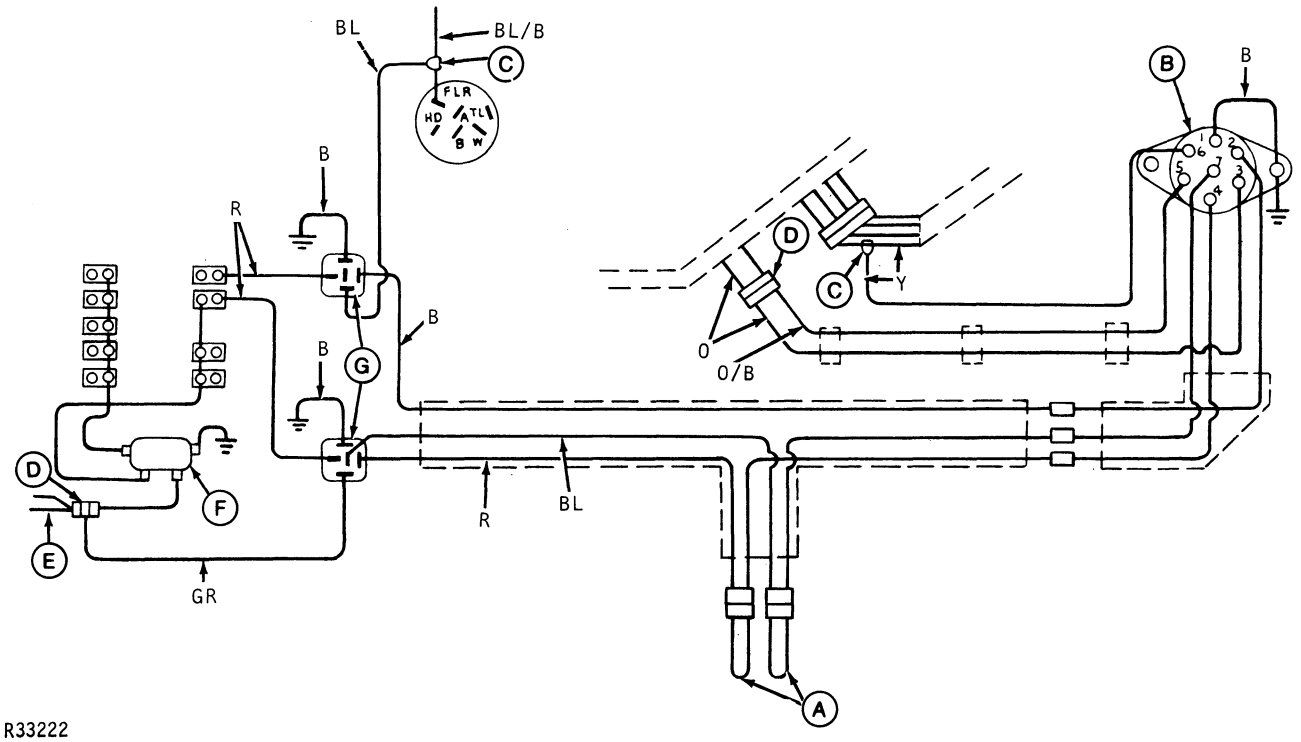

A—Patchcords (If Switches Are Not Used)
B—Outlet Socket
C—Splice
D—Connectors
E—Purple Lead from Key Switch
F—Sound-Gard Body Relay
G—Relays Installed for Outlet Socket

Wire Colors:
B—Black
BL—Blue
GR—Green
O—Orange
R—Red
Y—Yellow

Fig. 11-Connections for Outlet Socket

Testing

Fig. 11 shows recommended wiring connections for outlet socket. When testing, see whether socket is connected as shown. If not, you must carefully check each circuit for its source. The following instructions assume the recommended connections.

1. Use voltage detector, ohmmeter, or test light to make sure Terminal 1 of outlet socket provides a good ground.

2. Use voltage detector, voltmeter, or test light to check for voltage at each terminal of outlet socket.
Terminal 2—when flood lights are turned on.
Terminal 3—when left-hand turn signal or warning flasher is on.
Terminal 4—when key switch is turned on. (May also have a control switch.)
Terminal 5—when right-hand turn signal or warning flasher is on.
Terminal 6—when tail lights are on. (Turn light switch to "H".)
Terminal 7—when key switch is turned on. (May also have a control switch.)

3. If Terminal 4 or Terminal 7 does not have voltage, check control switch or patch cord.

4. If any terminal does not have voltage when it should, check the power source for that circuit.
Terminal 2—relay, 20-amp circuit breaker, or splice to flood light lead.
Terminal 3 or Terminal 5—connection to turn signal circuit.
Terminal 4 or Terminal 7—relay, 30-amp breaker, or connection to key switch lead.
Terminal 6—connection to tail light circuit.

Group 50
SPECIFICATIONS

GENERAL INFORMATION

Batteries

Item	Specification
8430 Tractor	
Battery ground	Negative
John Deere part no.	AR 47455
BCI group	5D
Battery volts	6
Cold cranking amps at 0°F (−18°C)	800
Reserve capacity (minutes at 25 amps)	340
Full charge specific gravity	1.260
8630 Tractor	
Battery ground	Negative
John Deere part no.	AR46116 AT37931*
BCI group	4
Battery volts	6
Cold cranking amps at 0°F (−18°C)	880 975*
Reserve capacity (minutes at 25 amps)	420
Full charge specific gravity	1.260

*Late model only

Circuit Breakers

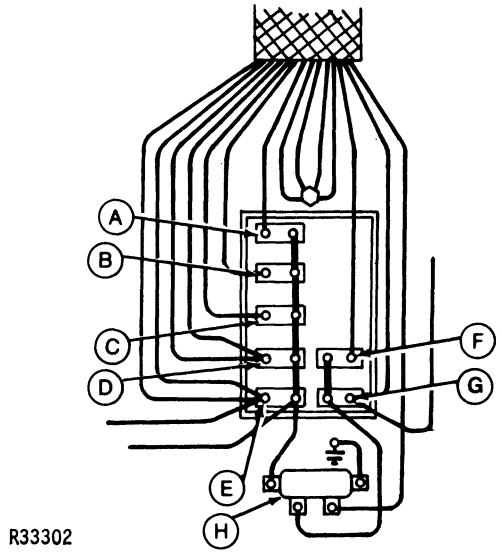

A—Front Flood Lamps and Upper Rear Flood Lamps
B—Horn, Lighter
C—Key Switch
D—Turn Signals, Warning Lamps, Tail Lamps, Lower Rear Flood Lamps
E—Head Lamps, Dome Lamp, Transmission Lube Indicator
F—Radio, Wiper Motors
G—Blower Motor, Clutch Lube Pressure Gauge
H—Sound-Gard Body Relay

Fig. 1-Circuit Breakers for Later Tractors (See Group 5 for Circuit Breaker Arrangement on Earlier Tractors)

Breakers "A" and "G"	30 amps
Breakers "B", "D", "E", and "F" at load center	20 amps
Breaker "C" at load center	10 amps
Electrical remote control breaker	25 amps
Breaker trip time with 50% overload	20 to 50 seconds
Breaker reset time with load removed	60 seconds

Litho in U.S.A.

DELCOTRON CHARGING CIRCUIT

Item	Specification
Voltage checks:	
"BAT" terminal	Battery voltage
Red wire to No. 2 terminal	Battery voltage
Brown wire to No. 1 terminal (key switch on)	
With wire connected to terminal	2 to 9 volts
With wire disconnected at alternator	Battery voltage
Voltage increase at "BAT" terminal (engine running/engine stopped)	0.5 volts minimum
AC voltage ripple at No. 1 terminal (engine running)	0.8 volts maximum
Regulated voltage at "BAT" terminal after 15 minutes operation:	

Air Temperature 1 in. (25 mm) Behind Regulator Case	Voltage
85°F (29°C)	13.8 - 14.9 volts
105°F (41°C)	13.6 - 14.7 volts
125°F (52°C)	13.4 - 14.6 volts
145°F (63°C)	13.2 - 14.4 volts

Output test (optional)	
72-amp alternator	60 amps minimum
72-amp alternator stator winding connection	"Delta"
Alternator pulley nut torque	60 ft-lbs (80 Nm) (8 kgm)

JOHN DEERE CHARGING CIRCUIT

Voltage checks:	
"B" terminal	Battery voltage
Red wire to "S" terminal	Battery voltage
Brown wire to "IG" terminal (key switch on)	
With wire connected to terminal	8 to 12 volts
With wire disconnected at alternator	Battery voltage
Voltage increase at "B" terminal (engine running/engine stopped)	0.5 volts minimum
AC voltage ripple at "G" terminal (engine running)	1.0 volts maximum
Regulated voltage at "B" terminal after 15 minutes operation:	

Regulator Temperature	Voltage
80°F (27°C)	13.8 - 14.5 volts
100°F (38°C)	13.6 - 14.4 volts
120°F (49°C)	13.5 - 14.3 volts
140°F (60°C)	13.3 - 14.2 volts

Output test (optional)	
90-amp alternator	80 amps minimum
Stator winding connection	"Delta"
Alternator pulley nut torque	60 ft-lbs (80 Nm) (8 kgm)

STARTING CIRCUIT

Item	Specification	Wear Tolerance
Neutral Start Switch		
Torque	25 ft-lb (34 Nm)	-----
Shifter camshaft end play	0.001-0.005 in. (0.025 to 0.127 mm)	-----
Prestolite Starter Circuit Relay Model SAZ-4201 J		
Winding current draw	3.5 to 4.5 amps at 12 volts	-----
Winding resistance	2.8 to 3.2 ohms	-----
Delco-Remy Solenoid Model No. 1115510 or 1115540 (8430 Tractor)		
Pull-in winding current draw	26—29 amps at 5 volts	-----
Hold-in winding current draw	18—20 amps at 10 volts	-----
Delco-Remy Solenoid Model No. 1119862 (8630 Tractor)		
Pull-in winding current draw	31-36 amps at 5 volts	-----
Hold-in winding current draw	14.3-15.4 amps at 10 volts	-----
Delco-Remy Starter Model No. 1113402 or 1113672 (8430 Tractor)		
No load test current draw	130 to 160 amps at 9.0 volts	-----
No load test armature rpm	5000 to 7000 rpm	-----
Bushing, overrunning clutch, I.D.	0.562 to 0.563 in. (14.28 to 14.30 mm)	0.574 in. (14.58 mm)
Bushing, nose housing		
I.D.	0.562 to 0.564 in. (14.28 to 14.30 mm)	0.574 in. (14.58 mm)
Oil clearance	0.002 to 0.005 in. (0.005 to 0.13 mm)	0.017 in. (0.43 mm)
Bushing, commutator end frame		
I.D.	0.562 to 0.564 in. (14.28 to 14.33 mm)	0.573 in. (14.55 mm)
Oil clearance	0.002 to 0.005 in. (0.005 to 0.13 mm)	0.016 in. (0.41 mm)
Bushing, lever housing		
I.D.	0.757 to 0.758 in. (19.23 to 19.25 mm)	0.772 in. (19.61 mm)
Oil clearance	0.010 to 0.013 in. (0.25 to 0.33 mm)	0.027 in. (0.69 mm)
Brush		
Offset direction	To riser bars	-----
Minimum length	7/16 in. (11 mm)	-----
Spring, brush, minimum tension	80 oz. (22 N)	-----
Armature end play	0.005 to 0.050 in. (0.13 to 1.27 mm)	0.060 in. (1.52 mm)
Pinion clearance	0.010 to 0.140 in. (0.25 to 3.55 mm)	-----
Screw, nose housing attaching,		
torque	11 ft-lbs (15 Nm)	-----
Delco-Remy Starter Model No. 1114191 (8630 Tractor)		
No load current draw	140 to 190 amps at 9 volts	-----
No load armature rpm	4000 to 7000 rpm	-----
Drive housing bushing		
I.D.	0.625 to 0.626 in. (15.88 to 15.90 mm)	0.636 in. (16.15 mm)
Oil clearance	0.002 to 0.004 in. (0.05 to 0.10 mm)	0.015 in. (0.38 mm)
Commutator bushing		
I.D.	0.562 to 0.563 in. (14.27 to 14.30 mm)	0.573 in. (14.55 mm)
Oil clearance	0.002 to 0.004 in. (0.05 to 0.10 mm)	0.015 in. (0.38 mm)
Lever housing bushing		
I.D.	0.843 to 0.844 in. (21.41 to 21.44 mm)	0.850 in. (21.59 mm)
Oil clearance	0.019 to 0.021 in. (0.48 to 0.53 mm)	0.027 in. (0.69 mm)
Minimum brush length	3/8 inch (10 mm)	-----
Pinion clearance	21/64 to 25/64 in. (8.3 to 9.9 mm)	-----
Commutator frame, lever housing, and drive housing attaching screw torque	13 to 17 ft-lbs (18 to 23 Nm)	-----

Starting Circuit—Continued

Item	Specification	Wear Tolerance
John Deere Solenoid		
Pull-in winding, pinion pulls in	8 volts or less	-----
Pull-in, and hold-in windings, pinion returns	12 volts	-----
John Deere Starter Model 028000-3290-ND (8430 Tractor)		
No load test current draw	70 to 110 amps at 9.0 volts	-----
No load test armature rpm	2500 to 4500 rpm	-----
Bushing, commutator and drive housing		
I.D.	0.6693 to 0.6704 in. (17.00 to 17.027 mm)	0.6740 in. (17.12 mm)
Oil clearance	0.0036 to 0.007 in. (0.178 to 0.191 mm)	0.016 in. (0.41 mm)
Depth	0.008 to 0.022 in. (0.20 to 0.56 mm)	-----
Bushing, center housing		
I.D.	1.182 to 1.184 in. (30.034 to 30.077 mm)	1.189 in. (30.20 mm)
Oil clearance		0.0236 in. (0.599 mm)
Depth	0.017 to 0.032 in. (0.43 to 0.81 mm)	-----
Brush, minimum length	5/8 in. (16 mm)	-----
Spring, brush, minimum tension	40 oz. (11 N)	-----
Armature end play	0.002 to 0.020 in. (0.05 to 0.50 mm)	-----
Pinion clearance	0.012 to 0.185 in. (0.31 to 4.70 mm)	-----
Screw, center bearing housing-to-field frame, torque	6 ft-lbs (8 Nm)	-----
Screw, commutator frame and drive housing, torque	10 ft-lbs (14 Nm)	-----
Screw, field pole, torque	30 ft-lbs (41 Nm)	-----
Screw, shift lever pivot, torque	30 ft-lbs (41 Nm)	-----
John Deere Starter Model 028000-3810-ND (8630 Tractor)		
No load current draw	70 to 130 amps at 9 volts	-----
No load armature rpm	2900 to 4500 rpm	-----
Commutator and drive housing bushing		
I.D.	0.669 to 0.670 in. (17.00 to 17.03 mm)	0.674 in. (17.12 mm)
Oil clearance	0.004 to 0.008 in. (0.10 to 0.19 mm)	0.016 in. (0.41 mm)
Depth	0.008 to 0.022 in. (0.20 to 0.56 mm)	-----
Center housing bushing		
I.D.	1.182 to 1.184 in. (30.03 to 30.08 mm)	1.189 in. (30.20 mm)
Oil clearance		0.024 in. (0.599 mm)
Depth	0.017 to 0.032 in. (0.43 to 0.81 mm)	-----
Minimum brush length	@8 in. (16 mm)	-----
Minimum brush spring tension	70 oz. (19.5 N)	-----
Shunt field winding current draw	15 to 18 amps at 12 volts	-----
Torques		
Drive housing-to-field frame screw	10 ft-lbs (14 Nm)	-----
Commutator frame-to-field frame screw	10 ft-lbs (14 Nm)	-----

LIGHTING CIRCUITS

Item	Specifications
Bulbs (12—16 volt)	
Dual-beam headlight	4460
Flood lamp (white, sealed beam)	
8430 Tractor (-005932), 8630 Tractor (-008129)	4411
8430 Tractor (005933-), 8630 Tractor (008130-)	4466
Tail lamp (white, double contact)	1157
Warning lamp (single contact)	1156
Tachometer lamp (miniature bayonet base)	1893
Console lamp	168
Dome lamp (bayonet base)	105
Cluster lamps (wedge base)	194
Transmission oil and air cleaner indicator lamps (wedge base, flashing)	557
Hi-beam, indicator lamp (miniature bayonet base)	1893
Voltmeter:	
Indicator at left edge of battery voltage green range	11.8 volts
Indicator straight up	13.0 volts
Indicator at right edge of charging voltage green range	15.5 volts
Air Cleaner Vacuum Switch:	
Closes above	24 to 26 inches water (60 to 66 mbar)

NOTE: For fuel, water and oil pressure gauge and sending unit resistance checks, see page 40-10-57.

INSTRUMENT CIRCUITS—Continued

Item	Specification
Transmission Oil Indicator Lamp Pressure Switches	
System oil pressure switch	Opens at 150 psi (10 bar)
Transmission lube oil pressure switch	Opens at 5 to 8 psi (0.4 to 0.6 bar)
Clutch engaging oil pressure switch	Closes at 150 psi (10 bar)

ACCESSORY CIRCUITS

Radio and tape player fuses	5 amps
Tape player relay:	
Current draw at 12.0 volts	0.07 amps
Winding resistance	180 ohms
Electric starting aid solenoid:	
Current draw at 12.0 volts	4 to 5 amps
Winding resistance	1.5 ohms
Wiper motor current draw:	
Low speed	2 to 3 amps
High speed	3 to 4 amps

Additional Accessories	
Maximum added to accessory circuit breaker	5 amps
Maximum connected to added circuit breaker	20 amps
Minimum power supply wire size to added circuit breaker	10 gauge
Minimum wire size to added accessories	16 gauge

Litho in U.S.A.

SPECIAL TOOLS

General Information

Tool	Use
D-24001MO Battery Tester	Test Batteries

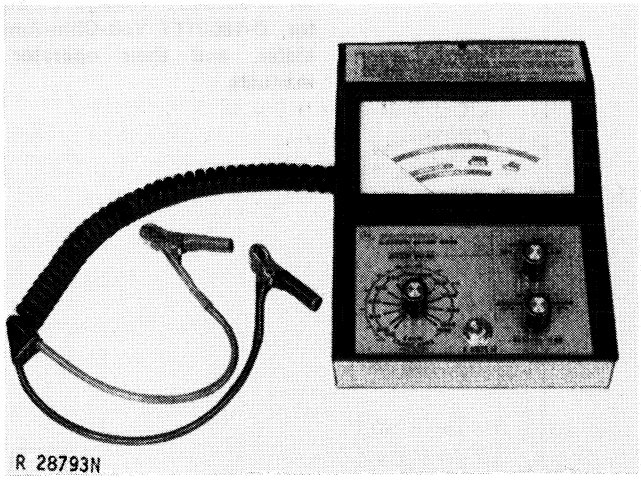

Fig. 2-D-24001MO Battery Tester

D-05136ST Voltage Detector	Test wiring circuits for opens, shorts, or grounds

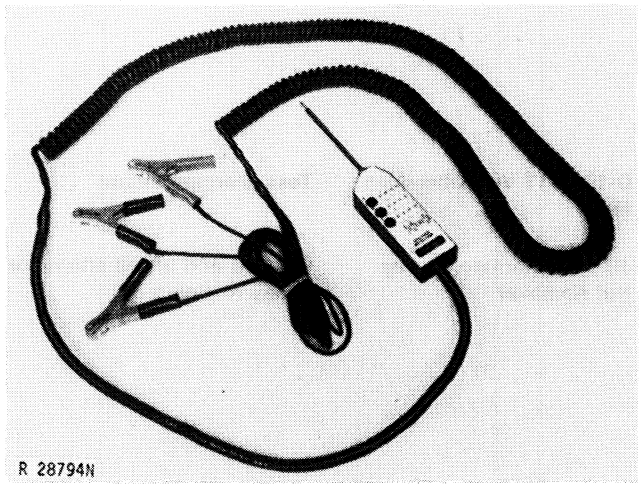

Fig. 3-D-05136ST Voltage Detector

D-19001TT Volt-Ohm-Amp Meter	Test any electrical components for voltage, resistance, or current draw Replacement fuses for Volt-Ohm-Amp Meter are available. Order No. D-05169ST.

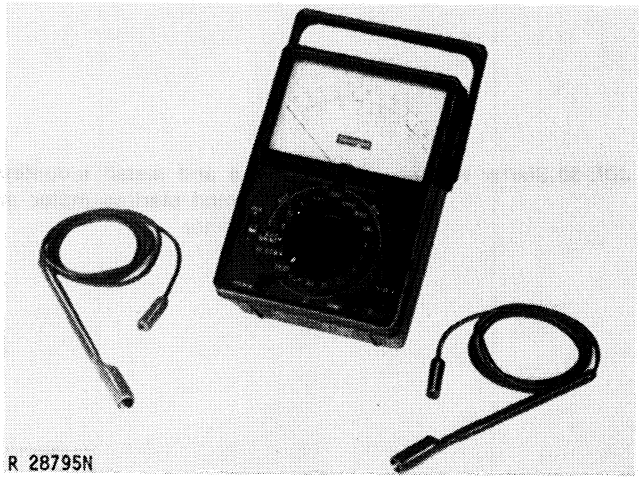

Fig. 4-D-19001TT Volt-Ohm-Amp Meter

General Information—Continued

Fig. 5-D-05138ST Carrying Case

TOOL	USE
D-05138ST Carrying Case	Store D-24001MO Battery Tester D-05136ST Voltage Detector, D-19001TT Volt-Ohm-Amp Meter, and their operator's manuals

Charging Circuit

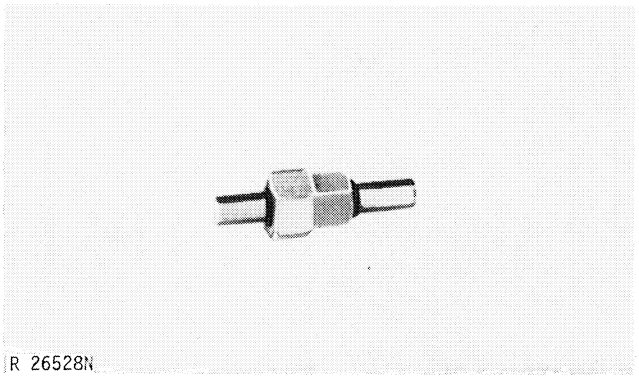

Fig. 6-JD-306 Alternator Pulley Nut Remover

D-19001TT Volt-Ohm-Amp Meter	Test charging circuit
JD-306 Alternator Pulley Nut Remover	Remove and install alternator pulley retaining nut

Starting Circuit

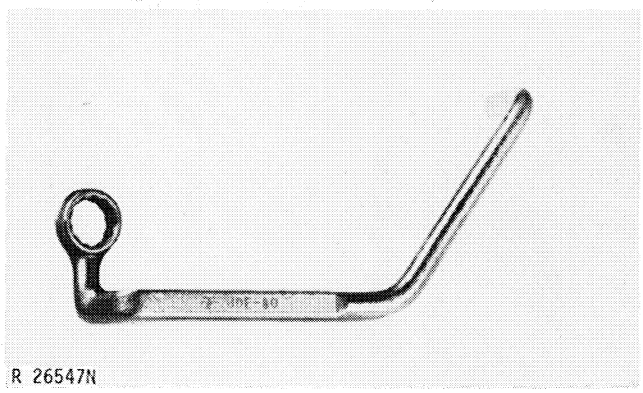

Fig. 7-JDE-80 Starter Wrench

JDE-80 Starter Wrench	Remove and install mounting bolt behind starting motor on 8440 Tractor

Litho in U.S.A.

Starting Circuit—Continued

Tool	Use
A—D-01045AA Bushing, Bearing and Seal Driver Set	Remove and install starter bushings.

Lighting Circuits

D-05136ST Voltage Detector	Test Wiring circuits for opens, shorts, or grounds.

Instrument and Accessory Circuits

JDST-33 Universal Gauge Tester	Test fuel gauge, water temperature gauge, engine oil pressure gauge, and their senders.

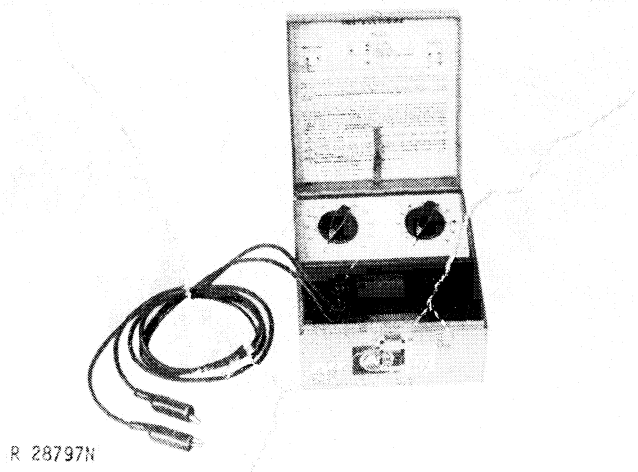

Fig. 8-JDST-33 Universal Gauge Tester

Order special tools from Service Tools, Box 314, Owatonna MN 55060.

Litho in U.S.A.

Section 50
POWER TRAIN

CONTENTS OF THIS SECTION

Page

GROUP 5 - PERMA-CLUTCH
- General Information 5-2
- Perma-Clutch Operating and Lubricating Circuit 5-2
- Diagnosing Malfunctions 5-10
- Testing 5-11
- Operating Piston Housing and Clutch Valve Housing
  - Removal 5-12
  - Repair 5-14
  - Assembly 5-17
  - Installation 5-18
- Clutch Assembly
  - Removal 5-19
  - Repair 5-19
  - Assembly 5-20
  - Installation and Adjustment 5-23
  - Rod Adjustment 5-25
- Clutch Oil Pump Drive Gear 5-26

GROUP 10 - QUAD-RANGE PLANETARY
- General Information 10-2
- Diagnosing Malfunctions 10-5
- Testing 10-5
- Repair
  - Removal 10-6
  - Disassembly and Inspection 10-9
  - Assembly 10-13
  - Installation 10-16
  - Adjustment 10-18

GROUP 15 - INDEPENDENT PTO
- General Information 15-2
- Diagnosing Malfunctions 15-4
- Testing 15-5
- Removal 15-5
- Repair 15-6
- Assembly and Installation 15-10

GROUP 20 - TORQUE DIVIDER
- General Information 20-1
- Diagnosing Malfunctions 20-2
- Repair 20-2
- Inspection and Assembly 20-3

Page

GROUP 25 - QUAD-RANGE TRANSMISSION
- General Information 25-1
- Diagnosing Malfunctions 25-3
- Removal 25-3
- Repair 25-5
- Assembly 25-7
- Range And Speed Selector Lever Assembly
  - Rod and Bell Crank Design
    - Removal and Repair 25-18
    - Assembly and Adjustment 25-20
  - One-Piece Cable Design
    - Removal 25-22
    - Repair 25-23
    - Assembly and Adjustment 25-24
- Transmission Oil Pump 25-27

GROUP 30 - DIFFERENTIALS AND DRIVE SHAFTS
- Differentials
  - Rear Differential
    - Removal 30-3
    - Repair 30-4
    - Assembly and Installation 30-5
  - Differential Lock 30-8
  - Front Differential
    - Removal 30-11
    - Repair 30-12
    - Assembly and Installation 30-13
    - Draining, Filling and Checking Front Differential Oil 30-19
- Drive Shafts
  - General Information 30-20
  - Repair 30-21
  - Installation 30-23
  - Timing Drive Shafts 30-23

GROUP 35 - FINAL DRIVES
- General Information 35-1
- Removal 35-1
- Disassembly and Repair 35-2
- Assembly and Adjustment 35-7
- Rolling Drag Torque 35-13
- Installation 35-16

GROUP 40 - SPECIFICATIONS AND SPECIAL TOOLS
- Specifications 40-1
- Special Tools 40-13

Litho in U.S.A.

Group 5
PERMA-CLUTCH

GENERAL INFORMATION

The Perma-Clutch is standard on all Quad-Range transmissions.

The Perma-Clutch assembly (Fig. 1) consists of oil cooled clutch disks alternately installed on a clutch hub with steel separator plates. The 8430 has four disks and three plates; the 8630 has five disks and four plates. An annular hydraulic piston (U) located in the operating piston housing presses against three clutch engaging levers (Z) which mechanically engage the clutch. A needle thrust bearing (O) absorbs thrust between the engaging piston and the operating levers.

The separator plates are notched to fit over pins (H) pressed into the flywheel. The clutch disks are in mesh with the clutch hub (F) which in turn is splined to the clutch shaft (GG) which provides power to the transmission.

The transmission clutch annular engaging piston is operated by pressure oil which is controlled by a clutch pedal-operated valve. Pressure oil to engage the operating piston is provided by a clutch oil pump located immediately forward of the front hinge. This oil pump is driven by a gear train which is supplied with power from the flywheel clutch cover. Consequently, the clutch oil pump provides pressure oil whenever the engine is running.

The oil pump also forces oil under pressure through the operating piston housing to clutch shaft to provide lubrication and cooling for the Perma-Clutch and two-speed planetary. For service information for the clutch oil pump, see Section 70, Group 15. A schematic of the clutch oil and transmission oil flow is given in Fig. 2.

Cooling oil used in the Perma-Clutch is dumped into the clutch housing after use. A return oil pump mounted in tandem with the clutch oil pump returns the oil in the clutch housing to the main reservoir.

PERMA-CLUTCH OPERATING AND LUBRICATING CIRCUIT

The Perma-Clutch hydraulic system generates, directs and controls the pressure flow of oil to the components in the clutch housing. The clutch oil operating and lubricating system consists of the following components; clutch oil pump, oil filter, filter relief valve housing, oil pressure regulating valve housing, clutch valve housing, oil cooler check valve and lubrication reduction valve.

Clutch Oil Pump and Filter

The "live" gear-type clutch oil pump located at the rear of the front hinge and driven by a gear in mesh with the PTO gear train circulates oil to operate, lubricate and cool the components in the clutch housing. It also lubricates and charges the main hydraulic pump, forces oil to the oil cooler to cool the hydraulic system, and supplies pressure oil to operate the Perma-Clutch and the two-speed planetary on the Quad-Range transmission.

A—Flywheel
B—Crankshaft
C—Adapter (8430)*
D—Thrust Washer (8630)
E—Bushing*
F—Clutch Hub
G—Pressure Plate
H—Guide Pin
I —Ring Gear
J —Clutch Disk (4-8430; 5-8630)
K—Separator Plate (3-8430; 4-8630)
L —Clutch Cover
M—PTO Clutch Shaft
N—Outer Race
O—Needle Thrust Bearing
P—Retainer
Q—Inner Race
R—Set Screw
S—Lock Nut
T—Retaining Ball
U—Operating Piston
V—Sleeve
W —Operating Piston Housing
X —Rubber Packings
Y —Oil Passages
Z —Operating Lever
AA—Pivot Pin
BB—Operating Bolt
CC—Lock Nut
DD—Adjusting Nut
EE —Washer (2 used -8430)
FF —Return Spring
GG—Clutch Shaft*

Legend for Fig. 1-Perma-Clutch Assembly

NOTE: Parts in Fig. 1 marked with an asterisk (*) are early design. See Fig. 36 for later design and replacement parts.

Litho in U.S.A.

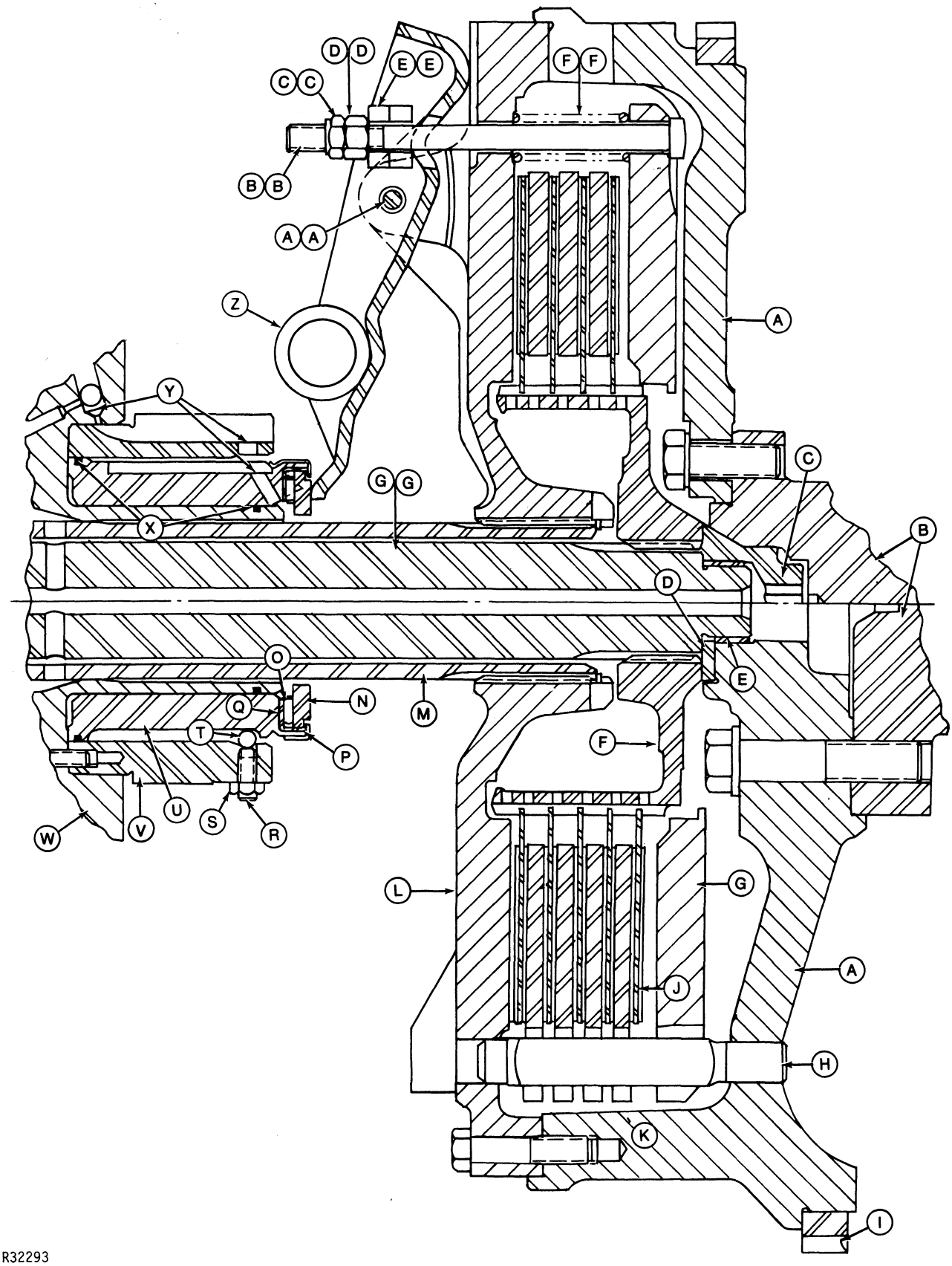

Fig. 1-Perma-Clutch Assembly
(8430 Top; 8630 - Bottom)

The clutch oil pump draws oil from the main reservoir (transmission case on early models, torque divider housing on late models) through a mesh strainer and delivers about 16.5 gpm (1.1 L/s) to a full flow filter (Fig. 2). From the oil filter the oil is directed to the pressure regulating valve housing located on the left side of the clutch housing and to the Perma-Clutch Circuit. The pressure regulating valve is set at 175 psi (1206 kPa). At that pressure the valve moves to direct oil to the oil cooler and hydraulic pump.

Clutch Oil Filter Relief Valve Housing

The oil filter relief valve housing (G, Fig. 2) is attached to the left rear of the front hinge. Oil from the main reservoir enters this housing, is routed to the oil filter for filtering, and then directed to the various hydraulic functions. This housing also receives oil from the clutch housing that has been picked up by the return oil pump and routes that oil back to the main reservoir. Lubricating oil and cooling oil coming from the oil cooler enters this housing and is directed to various lubricating points. Pressure oil to the independent PTO clutch is also routed through this housing to engage the PTO clutch (Section 50, Group 15).

A filter relief valve is also located in the filter relief valve housing. If the clutch oil filter becomes restricted, the oil filter relief valve moves to relieve that pressure. When a differential pressure of 74 psi (510 kPa) is reached the oil is routed to lube. If the differential pressure reaches 85 psi (586 kPa), the valve moves further to dump the oil into the clutch housing.

Oil Pressure Regulating Valve Housing

The oil pressure regulating valve housing is located on the left-hand side of the clutch housing. This valve housing receives oil under pressure from the oil filter relief valve housing and performs the following functions:

1. Pressure Regulating Valve

The oil pressure regulating valve controls oil pressure at 175 psi (1206 kPa) to supply pressure oil to the Perma-Clutch and two-speed planetary.

2. Oil Cooler Relief Valve

The oil cooler relief valve limits the pressure of oil to the oil cooler and the main hydraulic pump. Whenever oil pressure in the valve housing exceeds 102 psi (702 kPa), the oil cooler relief valve bypasses the oil cooler, routing the oil directly to the lubrication circuit. If oil pressure in the valve housing exceeds 116 psi (799 kPa) the valve dumps directly to sump.

Clutch Valve Housing

The clutch valve housing, containing the transmission clutch valve and PTO clutch valve, is attached to the inside of the pressure regulating valve housing and receives pressure oil as shown (Fig. 2). The pressure regulating valve housing is attached to the left-hand side of the clutch housing. See Figs. 3, 4 and 5 for transmission clutch valve and PTO clutch valve operation.

A—Transmission Oil Pump Relief Valve
B—Transmission Oil Pump
C—Transmission Drive Shaft
D—Low Range Pinion Lube Supply
E—Differential Drive Shaft
F—Oil Filter Housing
G—Filter Relief Valve Housing
H—Clutch Oil Pressure Line
I —Oil Cooler Return
J —Lube Oil to Operating Piston Housing
K—Oil Line to Main Hydraulic Pump
L—PTO Clutch Oil
M—PTO Brake Oil
N—Transmission Clutch Oil
O—Lube Oil
P—Oil to Two-Speed Planetary
Q—Clutch Valve Housing
R—Lube Oil to Independent PTO
AA—Clutch Pressure Oil
BB—Lube Pressure Oil
CC—Pressure Free Oil

Fig. 2-Perma-Clutch and Transmission Lube Oil Flow Schematic

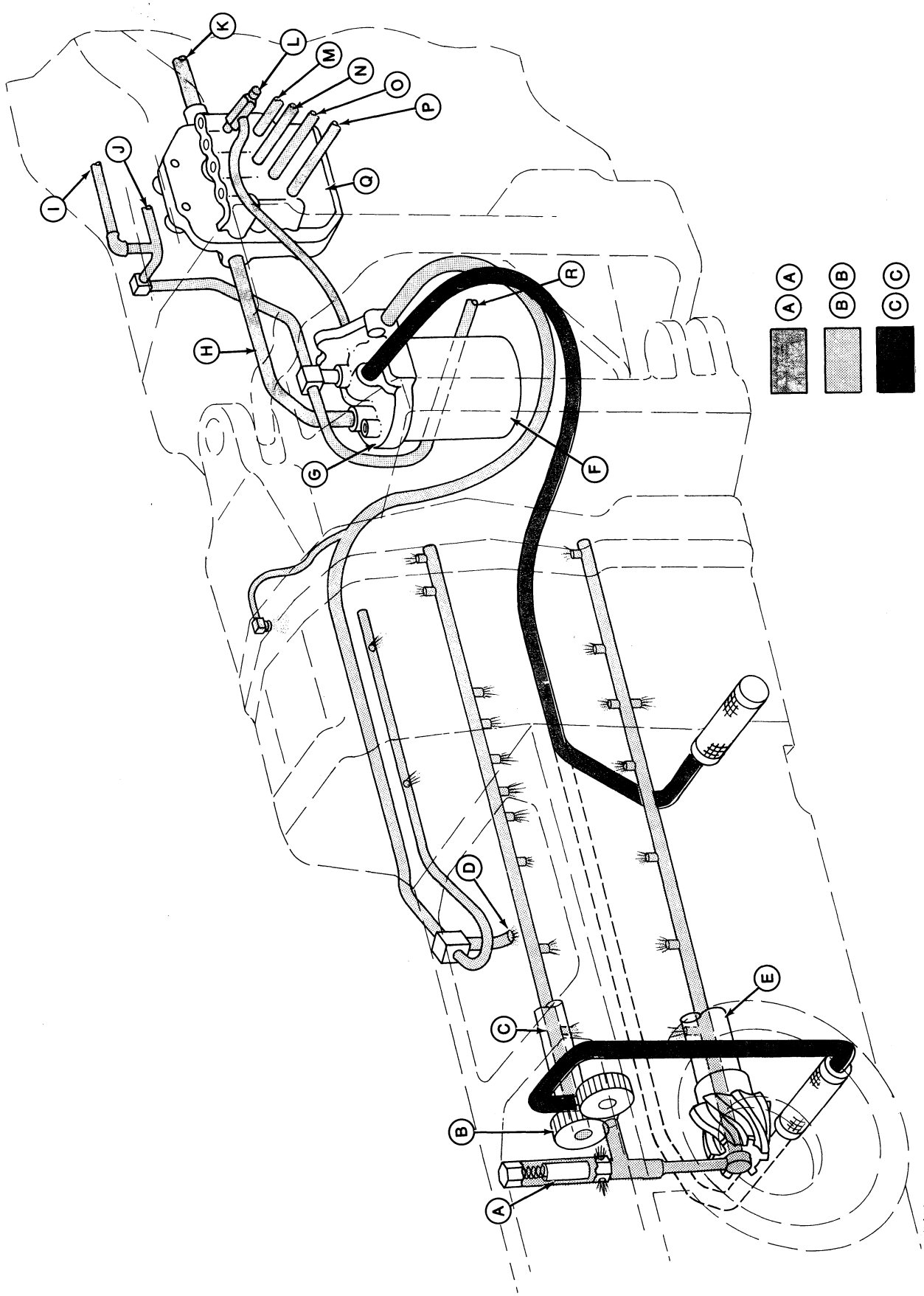

Fig. 2-Perma-Clutch and Transmission Lube Oil Flow Schematic - EARLY MODEL

Transmission Clutch Valve

The transmission clutch valve is located in the clutch valve housing.

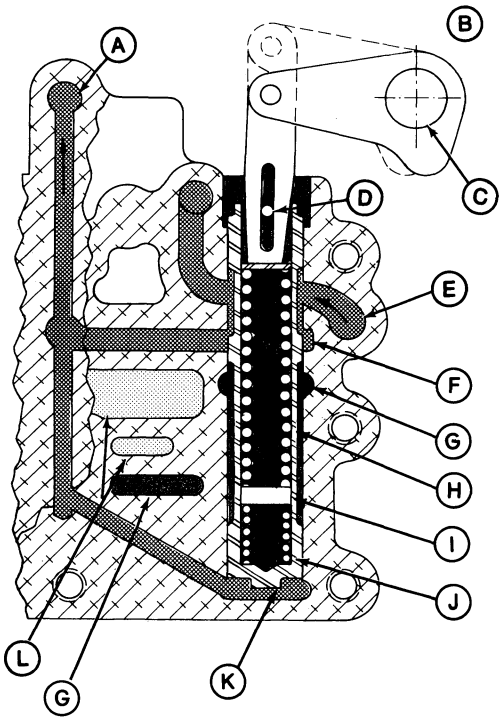

R32294C

A—Passage to Clutch Operating Piston
B—Disengaged Position
C—Operating Arm Shaft
D—Pin
E—System
F—Clutch Pressure
G—Sump
H—Upper Spring
I —Spacer Pin
J—Lower Spring
K—Clutch Valve
L—Lube Passage
Pressure Oil
Lube Oil
Pressure Free Oil

Fig. 3-Clutch Valve Engaged

The operating arm shaft (C, Fig. 3) is held in the engaged position by the clutch pedal return spring. Oil at system pressure (175 psi [1206 kPa]) is routed to the clutch operating piston to engage the transmission clutch. Note that pressure oil is also routed to the bottom of the valve to counteract the upper spring (H), which is pushing the clutch valve (K) down.

Oil pressure at the bottom of the valve provides modulation during engagement. As the valve land uncovers the clutch pressure passage, pressure oil also acts on the valve, opposing spring pressure to prevent sudden clutch engagement. Modulation is accomplished first by the lower spring (J). When the spacer pin (I) bottoms in the valve, modulation is provided by the stiffer upper spring (H). The clutch valve is forced fully open by the upper spring being compressed further as the arm completes its downward travel.

When the clutch is disengaged, the operating arm rotates upward, pulling the valve up by the cross pin pressed into the valve. The valve then cuts off system pressure and opens the clutch pressure passage to sump. The clutch pressure plate return springs (FF, Fig. 1) return the operating piston (U) to the disengaged position by way of the clutch operating levers (Z).

PTO Clutch Valve and Lock Piston

The PTO clutch valve and lock piston are located in the clutch valve housing.

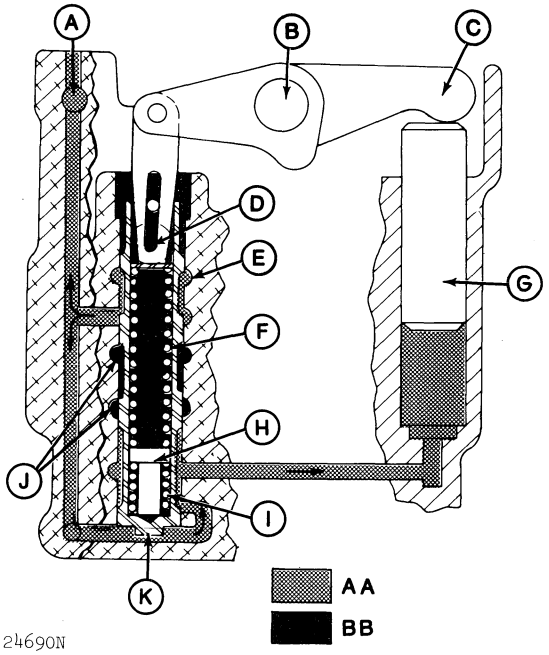

R 24690N

A—Oil Passage to Independent PTO Clutch
B—Operating Arm Shaft
C—Lock Arm
D—Oil Passage from PTO Brake
E—System Pressure
F—Upper Spring
G—Lock Piston
H—Spacer Pin
I—Lower Spring
J—Sump
K—PTO Clutch Valve
AA—Pressure Oil
BB—Pressure Free Oil

Fig. 4-PTO Clutch Valve Engaged

In the engaged position (Fig. 4) the operating arm shaft is rotated counterclockwise, compressing the springs in the PTO valve, pushing the valve down and routing pressure oil (175 psi [1206 kPa]) to the Independent PTO clutch to engage the clutch unit. Pressure oil is also routed to the bottom of the PTO valve to provide modulation, the same as with the transmission clutch valve.

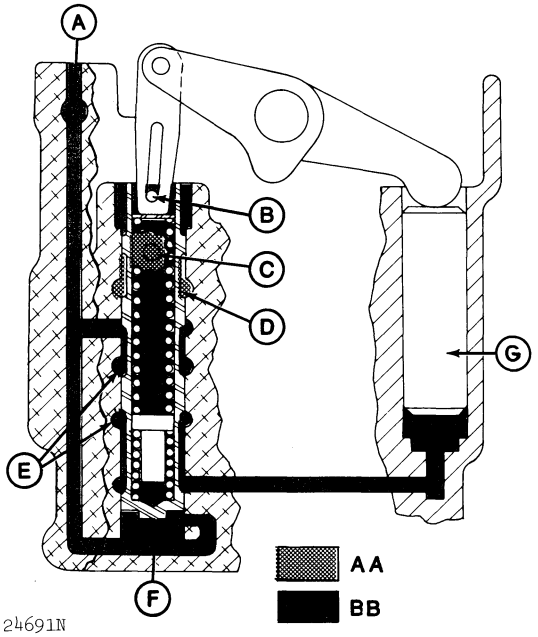

R 24691N

A—Oil Passage from Independent PTO Clutch
B—Pin
C—Passage to PTO Brake
D—System Pressure
E—Sump
F—PTO Clutch Valve
G—Lock Piston
AA—Pressure Oil
BB—Pressure Free Oil

Fig. 5-PTO Brake Engaged

When the PTO clutch is nearly engaged, the bottom land on the PTO valve uncovers a hole which routes pressure oil to the bottom of the PTO lock piston. This moves the lock piston up and locks the PTO firmly in position by means of the lock arm.

In the brake position (Fig. 5) the PTO clutch valve is held by the cross pin pressed into the valve. Oil at system pressure is routed to the PTO brake. The passage to the PTO clutch is open to sump. Oil from the lock piston is also returned to sump.

Oil Cooler Check Valve

The oil cooler check valve on top of the clutch housing prevents unfiltered oil from the oil filter relief valve from supplying the main hydraulic pump through the oil cooler return line.

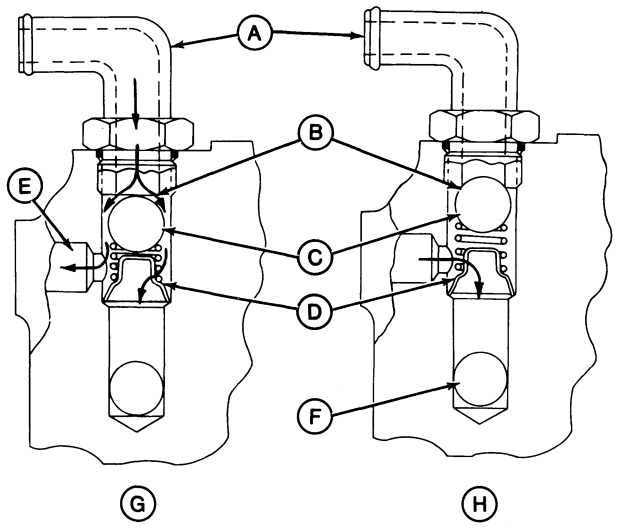

R 24692N

A—Elbow
B—Valve Seat
C—Check Ball
D—Spring and Retainer
E—To Filter Housing
F—To Clutch Lube
G—Normal Operation
H—Filter Relief Operation

Fig. 6-Oil Cooler Check Valve Operation

In normal operation (G, Fig. 6), the oil cooler check valve (C) moves off its seat (B) due to oil returning from the oil cooler and directs that oil (F) to the operating piston housing for clutch lubrication.

If the oil filter becomes restricted (H), the filter relief valve opens and allows unfiltered oil to come forward to the check ball, pushing the ball on its seat, and directing the oil to the operating piston housing for clutch lubrication.

Lubrication Reduction Valve

The lubrication reduction valve located in the clutch operating piston housing assists shifting, particularly with cold, thick oil, by reducing the lubrication oil flow when the clutch is disengaged to minimize clutch drag.

Fig. 7 shows the lubrication reduction valve in its two operating positions. Oil to the valve is coming from two sources. The primary source is oil from the oil cooler being directed to the oil cooler check valve, pushing the check ball off its seat, and coming forward to the lubrication reduction valve. The second source is oil that is coming from the clutch oil filter relief valve housing. This oil pushes the check ball on its seat and directs the filter relief oil to the lubrication reduction valve.

The position on the left of Fig. 7 shows the valve when the transmission clutch is engaged. Pressure oil from the clutch valve to the clutch operating piston pushes the lubrication reduction valve up against spring pressure and routes the entire lubrication flow to the transmission clutch assembly for cooling. Metering holes in the clutch hub evenly distribute about 6 gpm (0.38 L/s) through the clutch hub (F, Fig. 1).

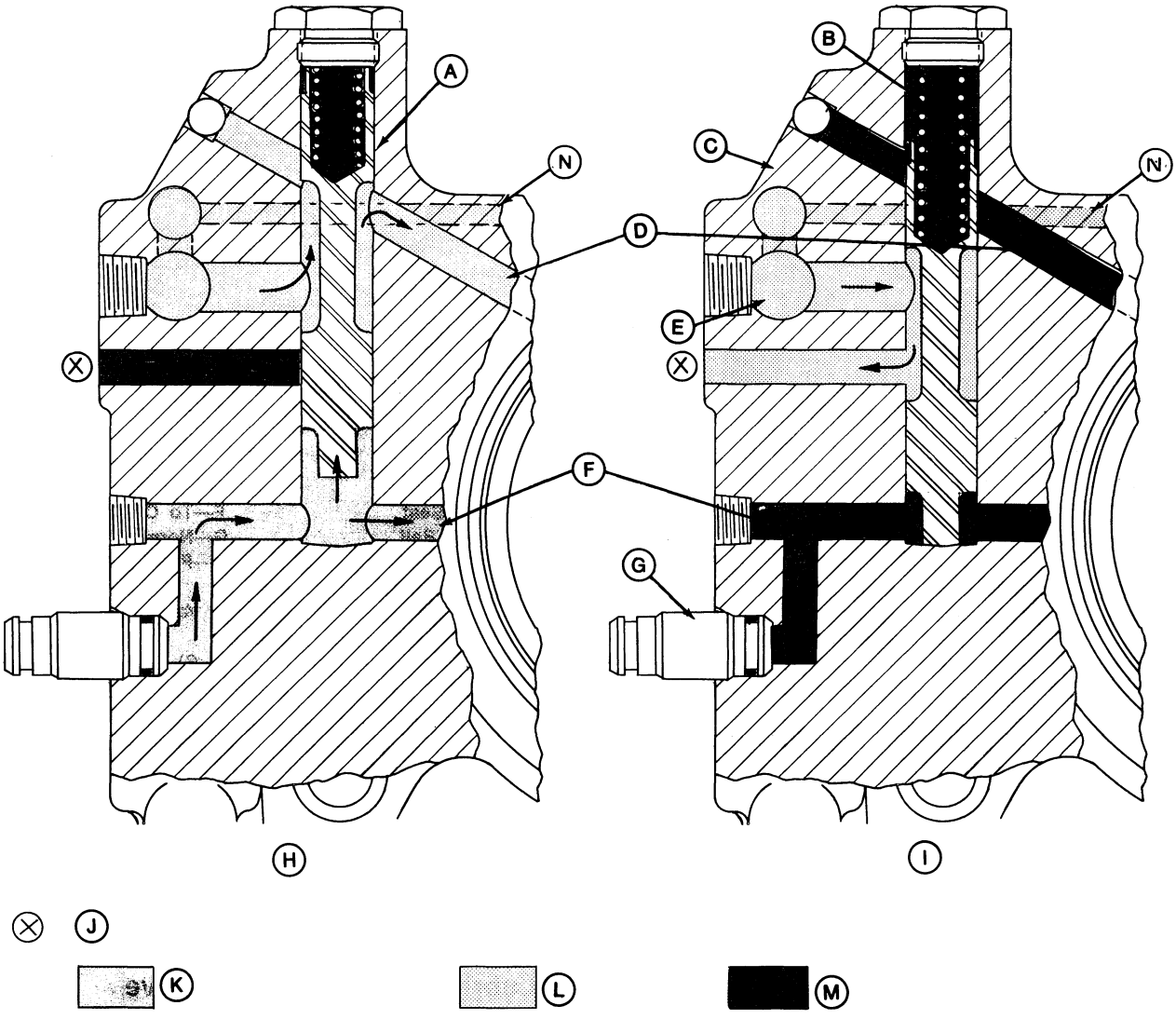

R32295C

A—Lubrication Reduction Valve
B—Valve Return Spring
C—Operating Piston Housing
D—Clutch Lube Pressure
E—Lubrication Passage
F—Clutch Oil Passage
G—Adapter
H—Clutch Engaged Position
I —Clutch Disengaged Position
J —Sump Opening
K—Clutch Pressure
L —Lube Oil
M—Pressure Free Oil
N—Priority Lube to Operating Piston Thrust Bearing and PTO Gear Roller Bearing

Fig. 7-Lubrication Reduction Valve Operation

The position on the right of Fig. 7 shows the transmission clutch disengaged (clutch pedal depressed). With oil pressure from the clutch valve shut off, the spring forces the lube reduction valve down and routes lubrication oil to sump instead of the clutch disks. This reduces clutch drag and stops clutch shaft rotation to ease shifting.

When the clutch is engaged, approximately 0.5 gpm (0.03 L/s) of oil is directed past the lubrication reduction valve to the clutch shaft and forward to the clutch shaft thrust adapter. The operating piston thrust bearing receives a continuous supply of lubrication oil through a small opening directly over the operating piston.

Warning System

Three switches are used in the transmission oil indicator lamp circuits. Early tractors use a single lamp to signal a loss of either clutch system oil pressure or transmission lube pressure.

Later tractors use a separate warning lamp for transmission lube pressure.

On early tractors, if the light on the dash comes on, make the following test:

Depress clutch pedal. If the light goes off, the problem is with the transmission lube system or transmission lube pressure switch.

If the light stays on, the problem is with the clutch system pressure or its respective switches.

Check for low clutch system pressure, a failed clutch system pressure switch, a grounded override switch or a grounded clutch system pressure switch.

NOTE: 8430 tractors (1896-) and 8630 tractors (2701-) use separate indicator lamps for clutch system pressure and lube pressure.

Clutch Lubrication Pressure Gauge

In addition to the three-switch system, all tractors are equipped with a clutch and hi-lo lube pressure gauge which is mounted on the control console. Its sensor is located at the top of the clutch oil filter relief valve housing.

System Oil Pressure Switch

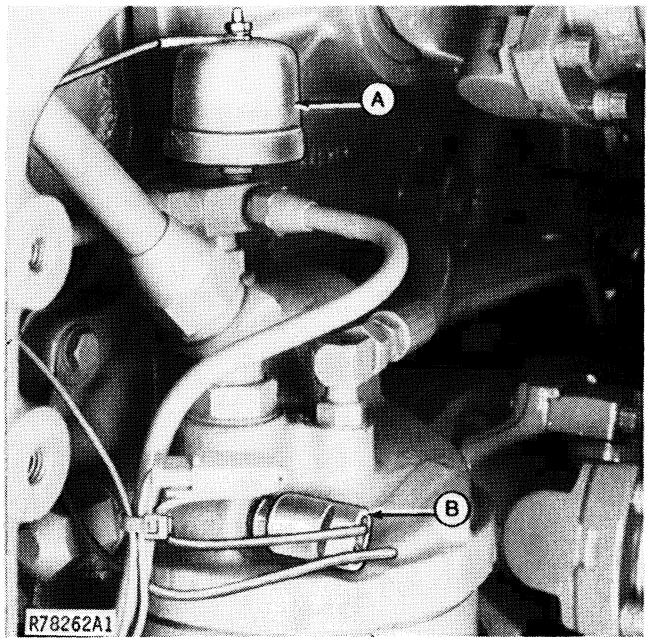

A—Clutch Lube Pressure Sender **B—System Oil Pressure Switch**

Fig. 8-Oil Filter Relief Valve Housing

The system oil pressure switch (B, Fig. 8) is located on the clutch oil filter valve housing which is attached to the rear of the front hinge. The switch senses system pressure and closes when pressure drops to 120 psi (8.28 bar) (8.44 kg/cm²) to light the indicator lamp.

Transmission Lubrication Oil Pressure Switch

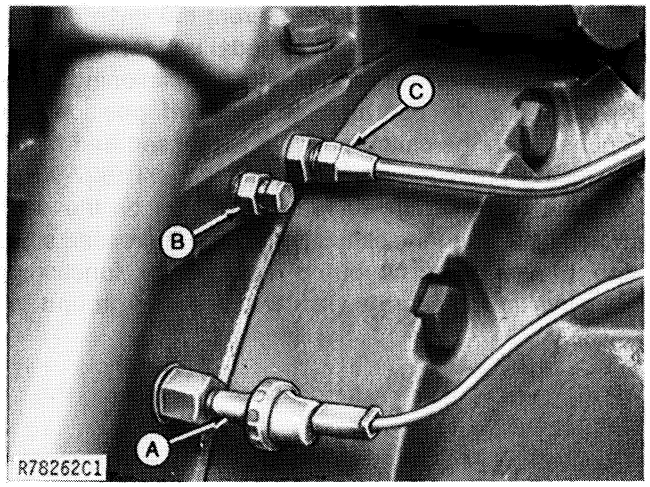

A—Transmission Lube Switch **C—Lock Inlet**
B—Brake Bleed

Fig. 9-Transmission Lube Switch

This switch (A, Fig. 9) is located on the right rear side of the transmission case. It senses transmission lube pressure through an oil line attached to the transmission oil pump housing. It operates in the open position but closes to light the transmission oil light when the lube pressure drops below 2 to 6 psi (0.14 - 0.42 bar).

Litho in U.S.A.

Warning System—Continued

Clutch Oil Pressure Switch

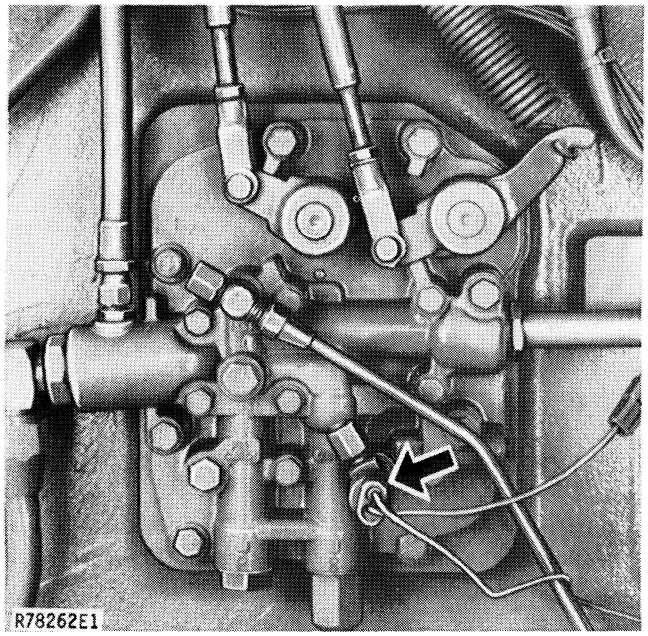

Fig. 10-Clutch Oil Pressure Switch

The clutch oil pressure switch (Fig. 10) is located in the clutch port of the pressure regulating valve housing. It is connected in series with the transmission lubrication switch. It functions as an override to the transmission lube switch to prevent the dash oil light from lighting when the clutch pedal is depressed and the transmission oil pump stops functioning. This switch normally operates in a closed position, but opens when the clutch pedal is depressed and clutch engaging pressure drops below 120 psi (827 kPa). Without this override capacity, the light on the dash would light when the clutch pedal was depressed since the transmission oil pump would stop functioning causing the pressure switch to close and ground the system.

DIAGNOSING MALFUNCTIONS

Clutch Slips

Worn facing (levers contact cover preventing full engagement)
Partial loss of pressure
Operator riding clutch pedal
Engaging levers not properly adjusted
Clutch valve not completely engaged

Clutch Drags

Clutch valve not completely disengaged
Lubrication reduction valve stuck or spring broken
Clutch disks warped or bent
Extremely cold oil

Noisy Engagement

Separator plate drive lugs not located on drive pins

Low Clutch System Pressure

Restricted oil filter
Low transmission oil level
Low clutch oil pump output
Weakened or broken pressure regulating valve spring
Stuck oil filter relief valve
Torn gaskets behind clutch valve housing
O-rings on adapters behind clutch valve housing leaking
Excessive leakage in operating piston
Stuck pressure regulating valve

Low Lubrication Pressure

Restricted oil filter
Low transmission oil level
Low clutch oil pump output
Stuck clutch oil filter relief valve or spring broken
Stuck oil cooler relief valve or spring broken
O-rings on adapaters behind clutch valve housing missing or leaking
Torn gasket between valve housings
Packing between operating piston housing and clutch housing missing or leaking

Excessive Oil Temperature

Dirty oil cooler core
Restricted oil filter
Oil cooler relief valve or filter relief valve stuck open
Hydraulic system problem

TESTING

If clutch malfunction is detected or suspected, check the condition of the oil filter before conducting any tests. Be sure that the filter relief valve is operating properly. The clutch must be supplied with an adequate volume of clean oil for proper operation.

Clutch Pressure Test

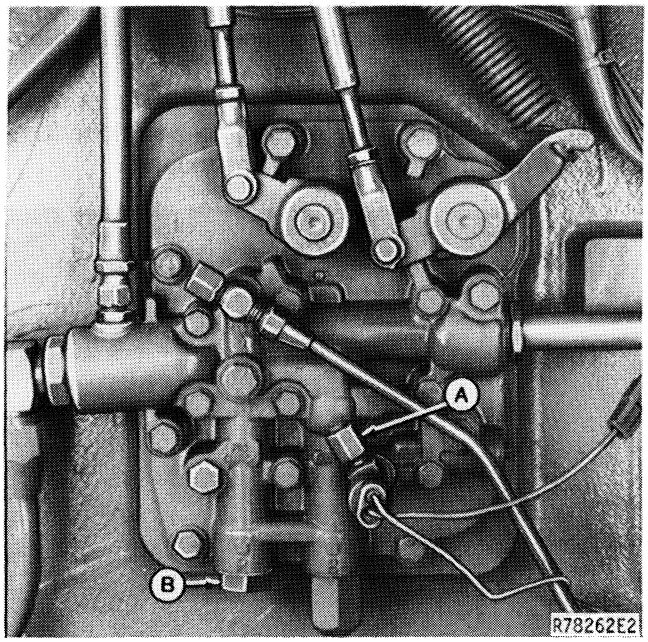

A—Test Plug **B—Pressure Regulating Valve Plug**

Fig. 11-Clutch Test Plug Location (Late Model)

To check clutch pressure on early models, remove pressure switch and install a 0-300 psi (0-2067 kPa) pressure gauge at the clutch pressure test plug in the pressure regulating valve housing.

On late models, connect the pressure gauge to the Tee-fitting at the clutch pressure test plug (Fig. 11).

Place transmission in PARK position.

Run engine at 2000 rpm. With oil at operating temperature, oil pressure should be 170 to 180 psi (1172 to 1240 kPa). If pressure is low, check the PTO clutch and brake pressure (Group 15) before adjusting system pressure. Low pressure may be due to low oil flow. First decrease and increase engine speed 300 rpm and observe pressure. If pressure drops off greatly as speed is decreased and increases greatly as speed is increased, the problem is inadequate oil pump flow or an oil leak. If the pressure changes only a few psi, and the PTO clutch and brake have the same low pressure, adjust system pressure. If pressure is normal on the PTO clutch and brake, system pressure is satisfactory, but there is excessive leakage in the clutch valve circuit.

To adjust system pressure, remove hex. plug from bottom of pressure control valve housing (B, Fig. 11) and add or deduct shims below pressure regulating valve springs. One shim equals approximately 5 psi (34 kPa).

When the clutch pedal is depressed, the oil pressure should drop immediately to zero. Engage the clutch gradually. The pressure will also increase gradually if the valve is modulating properly.

Lubrication Pressure Test

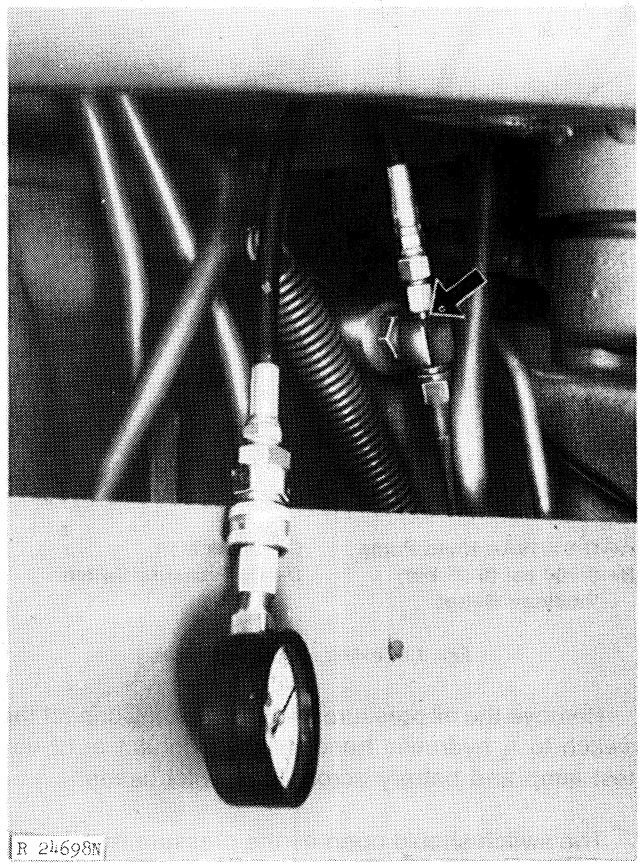

Fig. 12-Lubrication Pressure Check Point

Install the pressure gauge at the lubrication test plug on the left side of clutch housing (Fig. 12).

Run engine at 2000 rpm. With oil at normal operating temperature, approximately 150°F (66°C), minimum lubrication pressure is 30 psi (207 kPa). Reduce engine speed to slow idle (800 rpm). There should be a minimum of 3 psi (21 kPa) at this speed.

Litho in U.S.A.

Lubrication Flow Test

Check clutch oil pump output as instructed in Section 70, Group 15. This measures the oil which is delivered to the oil cooler and then returned for lubrication. Refer to Fig. 2 for lubrication flow schematic.

Oil Pressure Switch Test

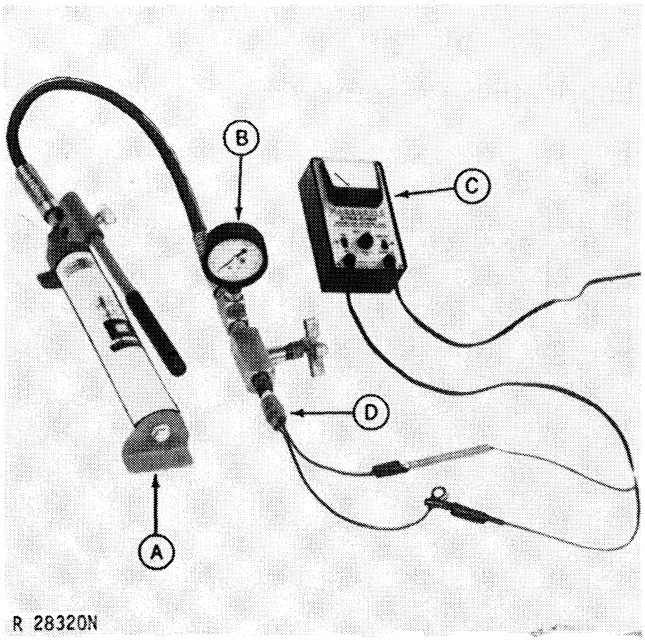

A—D-01019AA Hand Pump
B—0-300 psi (0-25 bar) Pressure Gauge
C—Ohmmeter
D—Oil Pressure Switch

Fig. 13-Testing Pressure Switch

Remove the oil pressure switch (Fig. 8). Connect the switch to a hydraulic hand pump. Connect a 12-volt test lamp and battery across the switch leads.

The switch should open as the pressure is raised to 145 to 155 psi (999 to 1068 kPa) and close when the pressure is reduced to 115 to 125 psi (792 to 861 kPa).

OPERATING PISTON HOUSING AND CLUTCH VALVE HOUSING

Removal

Disconnect and remove the upper telescoping U-joint from the clutch output yoke while the tractor is in a straight position. After the U-joint is removed, then put the tractor in a sharp right turn.

Separate engine from clutch housing. Refer to Section 10, Group 25, for procedures.

⚠ CAUTION: Use necessary safety precautions when performing separation. Use support under sections when necessary.

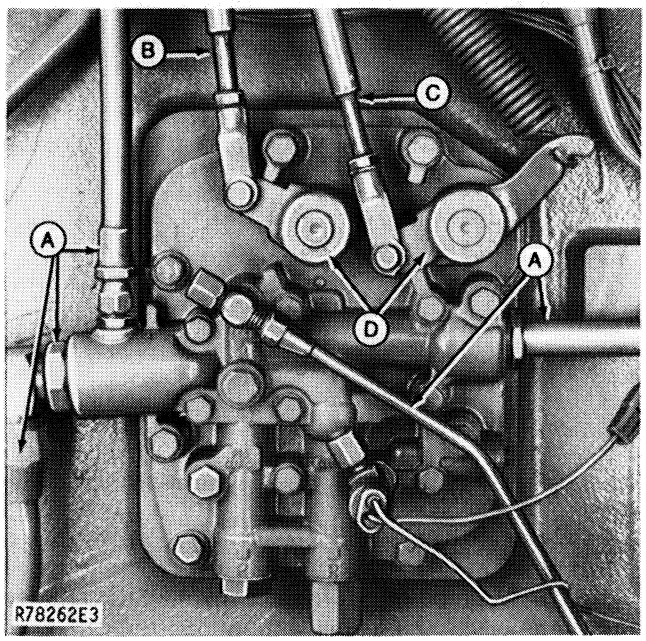

A—Oil Lines
B—PTO Rod
C—Clutch Rod
D—Operating Arms

Fig. 14-Pressure Regulating Valve Housing (Late Model Shown)

Remove oil lines (A, Fig. 14) and operating rods (B) from pressure regulating valve housing. On some tractors the operating rods are secured to the operating arms by spring pins. Remove these spring pins to disconnect rods from arms. On other tractors the rods are secured to the operating arms by retaining rings (Fig. 15). The rods cannot be disconnected until the operating arms are removed from the operating arm shafts. Remove spring pin securing arms to shaft and remove arms.

Later tractors (Fig. 14) are headed pins and retainer pins to connect the operating rods to their arms.

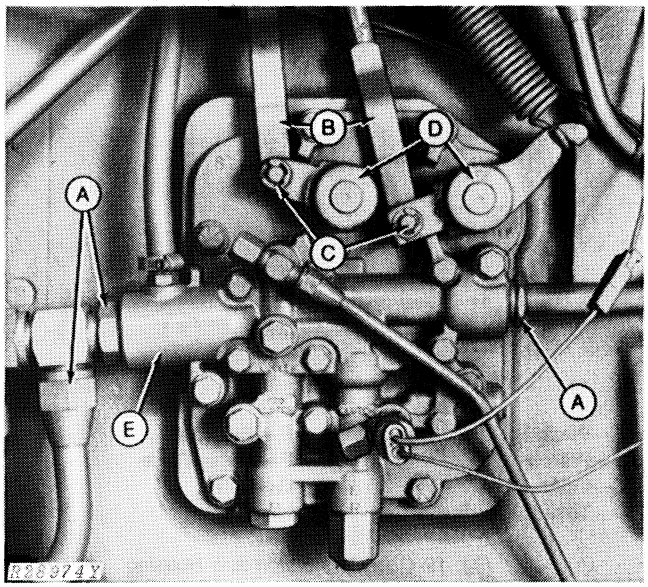

A—Oil Lines
B—Operating Rods
C—Retaining Rings
D—Spring Pin
E—Pressure Regulating Valve Housing

Fig. 15-Pressure Regulating Valve Housing (Early Tractor Shown)

Remove the valve housing. Pull housing straight out to loosen from adapters in clutch housing.

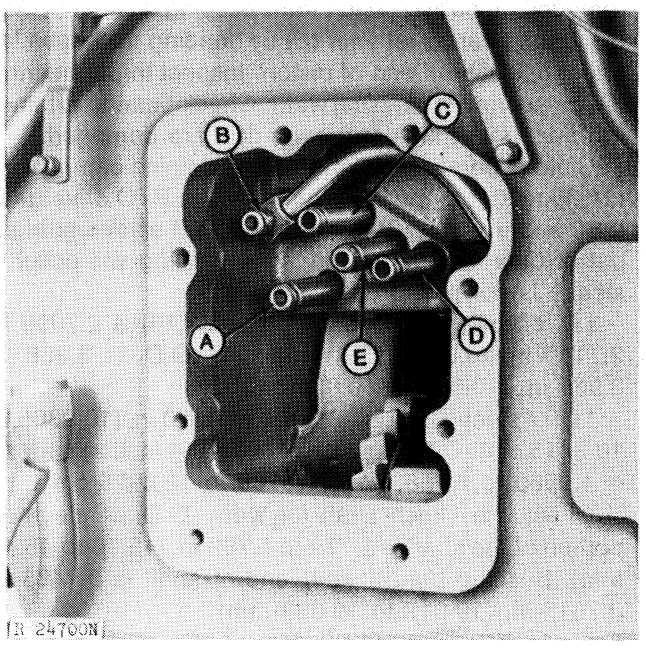

A—PTO Brake
B—PTO Clutch
C—Transmission Clutch
D—Two-Speed Planetary
E—Lube

Fig. 16-Clutch Operating Housing Adapters

Inspect O-rings on adapters for damage. Replace if necessary.

Remove adapters (Fig. 16) from clutch operating piston housing by firmly pulling adapters straight out from housing.

Before operating piston housing can be removed from clutch housing, the two-speed planetary must be removed.

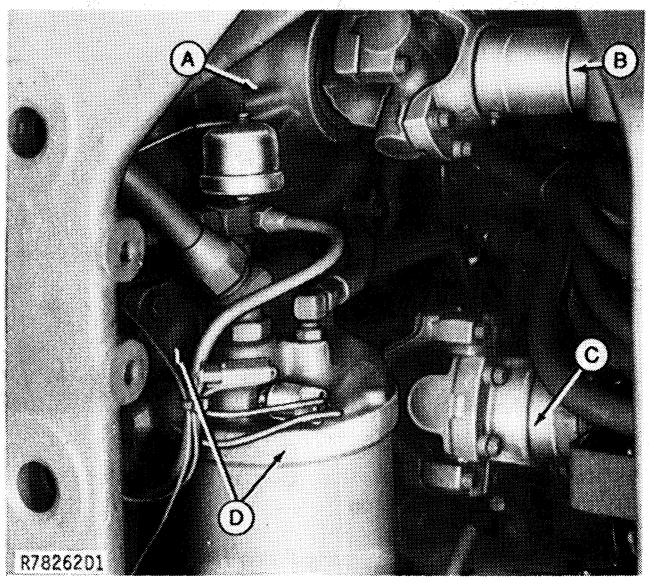

A—Bearing Quill
B—Output Shaft
C—PTO Shaft
D—Relief Valve Housing

Fig. 17-Rear of Front Hinge

Remove clutch output yoke bearing quill (A, Fig. 17). Insert jack screws in holes to break the seal of bearing quill to front hinge. Disconnect steering feedback cylinder line from filter relief valve housing before attempting to remove bearing quill.

Remove planetary unit as instructed in Group 10.

Remove clutch shaft (C, Fig. 18) from piston housing.

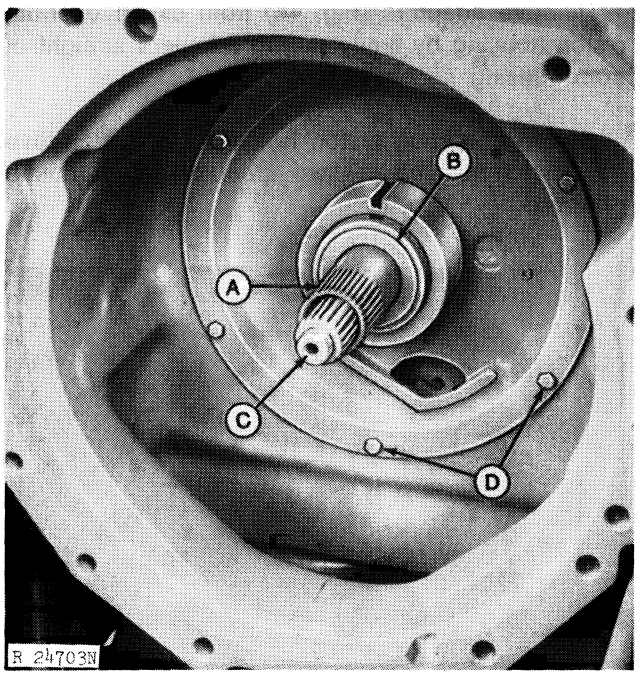

A—Clutch Oil Pump Drive Shaft
B—Clutch Operating Piston
C—Clutch Shaft
D—Cap Screws

Fig. 18-Operating Piston Housing (Late Model Shown)

Remove six cap screws (D, Fig. 18) holding clutch operating piston housing in place. Remove the operating piston housing from clutch housing.

NOTE: Guide screws or special tool shown in Fig. 27 can be used to remove piston housing. Use tool for installation as well.

Repair

Disassemble the operating piston housing as follows:

Remove five cap screws (1, Fig. 20) holding rear PTO drive gear bearing quill (2) to operating piston housing and remove quill. BE CAREFUL not to damage shims (3) behind bearing quill.

Remove the PTO drive gear (6). Pull PTO drive shaft from operating piston housing. Inspect PTO drive gear.

The O.D. of the front bearing cone mating surface is 3.3765 to 3.3771 in. (8.577 to 8.578 cm). O.D. of rear mating surface is 2.6260 to 2.6266 in. (6.670 to 6.672 cm).

Inspect bearing cones (5 and 8) on ends of drive gear. Inspect PTO drive shaft sealing ring (10).

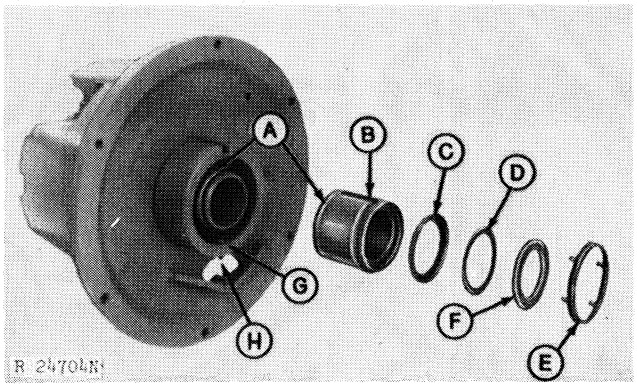

A—Packings
B—Piston
C—Inner Race
D—Thrust Bearing
E—Retainer
F—Outer Race
G—Ball
H—Screw

Fig. 19-Operating Piston and Housing

A set screw (H, Fig. 19) in the bottom of the transmission clutch operating piston sleeve holds a steel ball in a slot located along the bottom of operating piston. The ball limits the travel of the operating piston to eliminate piston coming out of sleeve. Loosen lock nut (20, Fig. 19) on set screw and back screw out enough to allow piston to clear ball (G, Fig. 18).

Transmission clutch operating piston (B, Fig. 18) is removed by pulling piston from housing. Remove needle thrust bearing retainer (E) by bending back tabs far enough to slip off end of piston. Inspect thrust bearing (D) for scoring or unusual wear. Check bearing retainer for cracks. Replace any parts that are damaged.

Clutch operating piston sleeve retaining cap screws (24, Fig. 20) can be removed after the PTO drive gear front bearing cup (9) is removed. Pull sleeve straight out of operating piston housing. Binding will occur if sleeve is not pulled out straight.

I.D. of the clutch operating piston (16) is 2.7090 to 2.7110 in. (6.8805 to 6.8855 cm). O.D. is 3.958 to 3.968 in. (10.053 to 10.079 cm).

I.D. of sleeve (21) is 4.0300 to 4.0320 in. (10.2365 to 10.2415 cm). O.D. of sleeve at housing mating surface is 4.9560 to 4.9580 in. (12.5785 to 12.5925 cm).

Check the clutch shaft for wear. O.D. of elevated portion of the shaft is 1.779 to 1.789 in. (45.18 to 45.44 mm). Bushing bore at rear end of shaft is 0.7485 to 0.7515 in. (19.012 to 19.088 mm).

On models equipped with an exterior clutch pressure line, inspect the line for wear and replace as necessary.

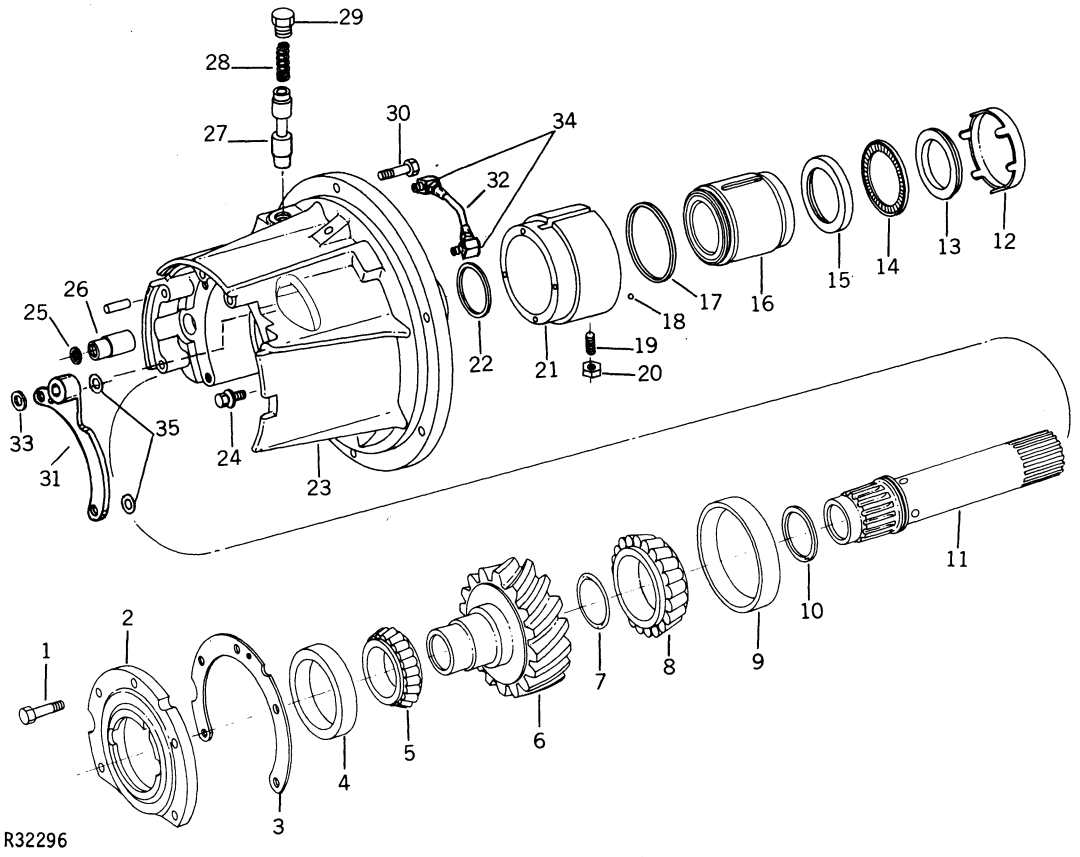

1—Cap Screw
2—Bearing Quill
3—Shim
4—Bearing Cup
5—Bearing Cone
6—PTO Drive Gear
7—O-Ring
8—Bearing Cone
9—Bearing Cup
10—Sealing Ring
11—PTO Drive Shaft
12—Retainer
13—Outer Bearing Race
14—Needle Thrust Bearing
15—Inner Bearing Race
16—Operating Piston
17—Rubber Packing
18—Steel Ball
19—Set Screw
20—Lock Nut
21—Piston Sleeve
22—Rubber Packing
23—Operating Piston Housing
24—Special Cap Screw
25—Rubber Packing
26—Adapter
27—Lube Reduction Valve
28—Spring
29—Plug
30—Cap Screw
31—Clutch Spacer Block*
32—External Clutch Pressure Line*
33—O-Ring Packing (2 used)*
34—Elbows (2 used)*
35—Shims*

***Modified Housings Only**

Fig. 20-Operating Piston Housing Assembly

NOTE: 8430 Tractors (3595-) and 8630 Tractors (4936-) do not use the parts marked with the asterisk (*).

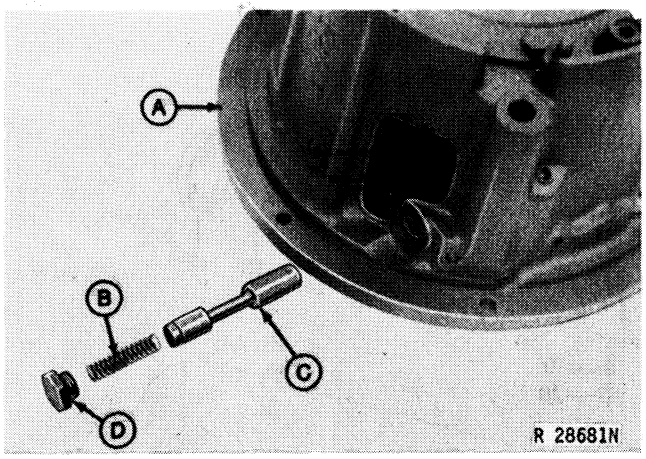

A—Operating Piston Housing
B—Spring
C—Lube Reduction Valve
D—Plug

Fig. 21-Lube Reduction Valve

The lube reduction valve (C, Fig. 21) can be removed by removing plug (D) from operating piston housing (A) and pulling spring (B) and valve from bore.

Check spring for proper specifications. Approximate free length is 1.85 inch (47 mm). With 9.3 to 11.3 lbs. (4.2 to 5.2 kg) compressive load, spring should measure 0.91 inch (23 mm).

Lube reduction valve length is 3.78 inch (96 mm). O.D. is 0.6850 to 0.6860 inch (17.399 to 17.425 mm).

To disassemble the clutch valve housing, first remove the spring pins on the outside of the pressure regulating housing which fasten the clutch and PTO operating arms to the operating shafts (earlier design). Then remove the eight cap screws which secure the clutch valve housing to the pressure regulating housing. Separate the two housings.

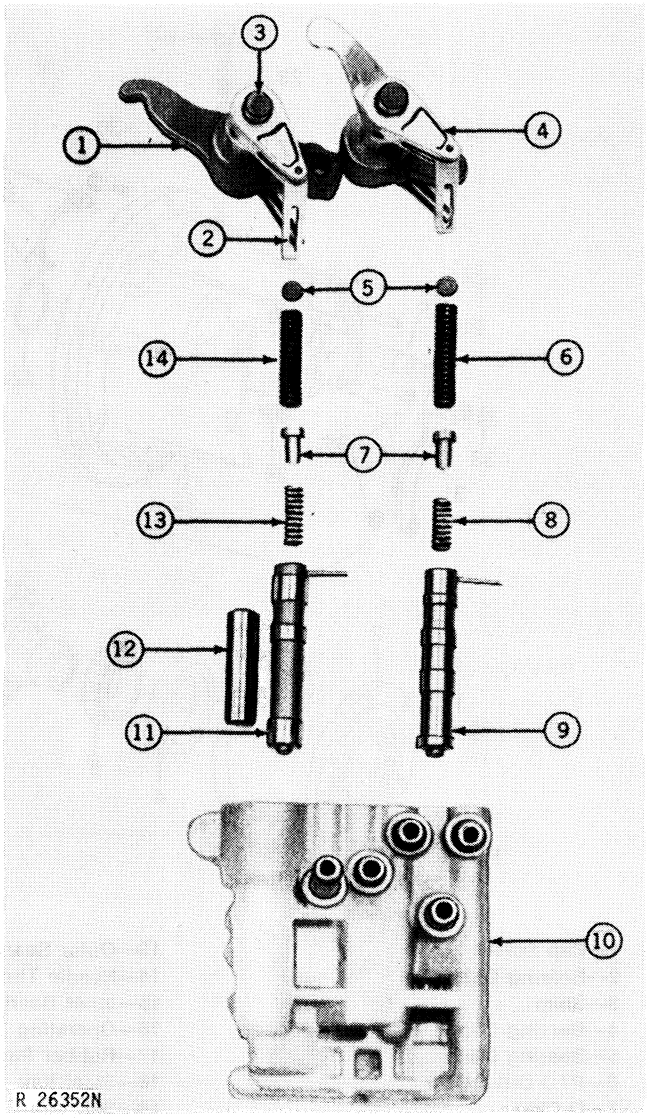

1—Clutch Valve Outer Arm
2—Valve Link (Notched)
3—Clutch Valve Inner Arm
4—PTO Valve Operating Arm*
5—Thrust Washers
6—Upper PTO Valve Spring*
7—Spacer Pins
8—PTO Valve Spring (Lower)*
9—PTO Valve*
10—Clutch Valve Housing
11—Clutch Valve
12—PTO Lock Piston
13—Clutch Valve Spring (Lower)
14—Clutch Valve Spring (Upper)

***Not used on Tractors without PTO**

Fig. 22-Clutch and PTO Valve

Refer to Fig. 22 for disassembly of the valves. The clutch valve has three lands and the PTO valve has four lands. The valve O.D. is 0.7467 to 0.7473 inch (18.96 to 18.98 mm). The I.D. of the valve bores is 0.7495 to 0.7505 inch (19.04 to 19.06 mm).

In checking springs, the approximate free length may vary, but the compressed length should be accurate. Springs should be free of pitting or distortion.

PTO and Clutch Springs

	Free	Loaded
Upper	2.28 in. (57.9 mm)	1.84 in. (46.7 mm) at 52.2 to 63.8 lbs. (23.6 to 28.9 kg)
Lower	1.09 in. (27.8 mm)	0.59 in. (15.1 mm) at 10.8 to 13.2 lbs. (4.9 to 6.0 kg)
Clutch Springs* (dyed red)		
Upper	2.10 in. (53.3 mm)	2.05 in. (52.1 mm) at 8.6 to 10.6 lbs. (3.9 to 4.8 kg)
Lower	1.13 in. (28.7 mm)	0.61 in. (15.5 mm) at 14.4 to 17.6 lbs. (6.5 to 8.0 kg)

*8430 - after 004258; 8630 - after 005760

Assembly

Install clutch operating sleeve (21, Fig. 20) in operating piston housing. Tighten cap screws (24) to 60 in-lbs (6.78 Nm) torque.

Install two-speed oil sleeve (26, Fig. 20) in housing. The sleeve should be pressed flush to 0.010 in. (0.25 mm) below the finished face of the housing and adjacent to the sleeve.

Drive bearing cup (9) in until it bottoms.

Install sealing ring (10) on PTO clutch shaft and insert shaft (11) into piston housing from rear until shaft bottoms in housing. Be sure O-ring (7) is installed in I.D. of PTO shaft.

Position operating piston housing with PTO shaft facing down. Position clutch pump drive gear front bearing (8) into cup. Place rear bearing quill (2) in place with enough shims (3) to provide end play.

IMPORTANT: When checking drive gear end play, spin the gear to seat the front bearing rollers. Raise the gear and check end play. Spin the gear again to recheck end play.

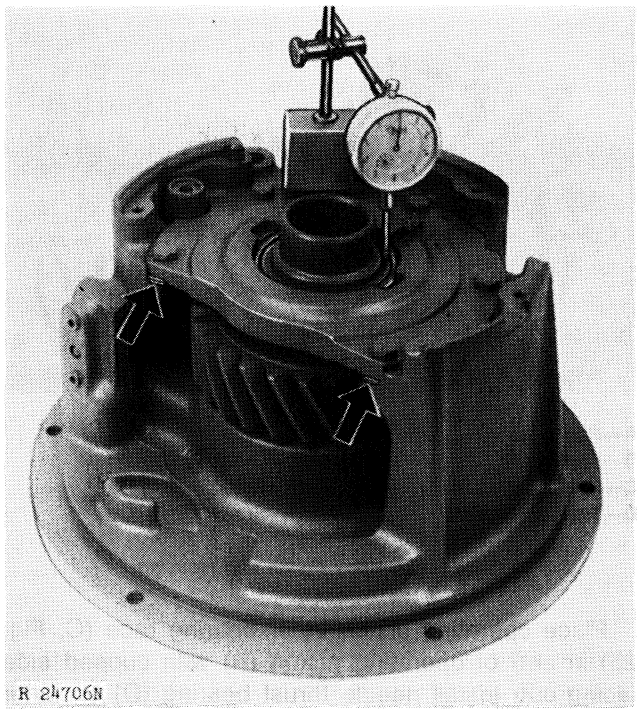

Fig. 23-Checking Clutch Oil Pump Drive Gear End Play (Arrows Indicate Shims)

Check end play of clutch pump drive gear (Fig. 23). Correct end play is 0.003 to 0.005 in. (0.08 to 0.13 mm). Remove or add shims (arrows) to obtain correct end play. Tighten bearing quill cap screws to 35 ft-lbs (47 Nm) torque.

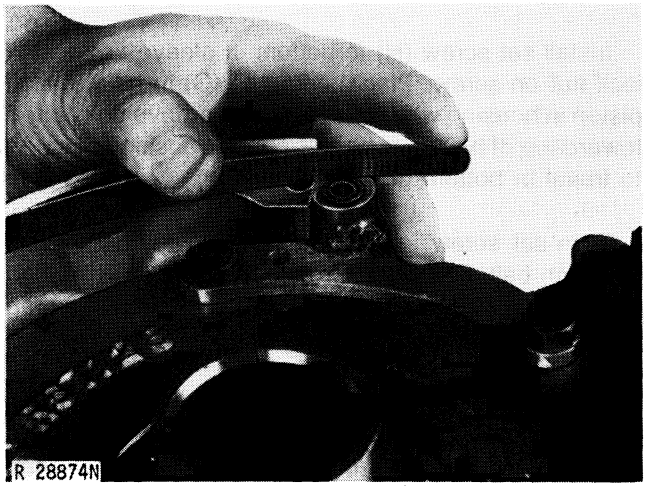

Fig. 24-Clutch Pressure Block Installation

On early models install the clutch pressure block (31, Fig. 20) with packings on both top and bottom. Shim under spacer block until block is 0.000-0.005 inch (0.00-0.127 mm) below planetary mounting face (Fig. 24). Retorque bearing quill bolts to 35 ft-lb (47 Nm).

Install lubrication reduction valve in valve bore, insert spring and tighten plug securely.

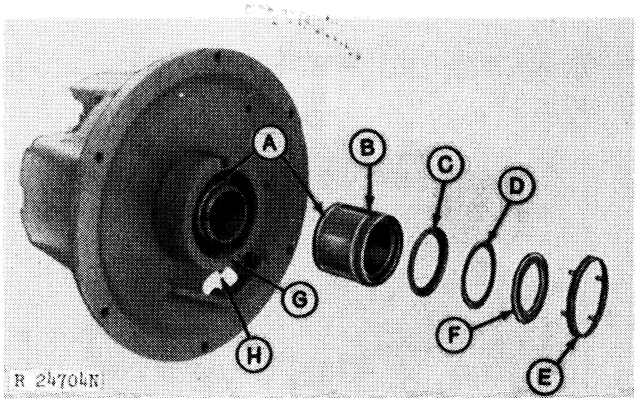

A—Packings
B—Pisotn
C—Inner Race
D—Thrust Bearing
E—Retainer
F—Outer Race
G—Ball
H—Screw

Fig. 25-Operating Piston and Housing

Place operating piston inner bearing race (C, Fig. 25) in end of operating piston (B) with cupped side facing out. Install needle thrust bearing (D) on inner race. Install outer race (F) with widest side of race against needle thrust bearing. Install retainer (E) with tangs toward piston and bend tangs down into groove around O.D. of piston.

Lubricate packings (A) for piston and install one in groove in piston and the other in the groove in piston housing extension.

Install set screw (H) in bottom of sleeve and install lock nut on screw. Place steel ball (G) in hole. Install piston in housing with square-end oil groove positioned toward top of housing. (Ball should be positioned so as to travel in bottom groove in piston.)

Turn set screw in until it is snugly seated against retaining ball. Back set screw out until the piston can be moved freely in bore without experiencing drag against ball. Tighten lock nut.

When assemblying the clutch valve housing, refer to Fig. 22. Tighten clutch valve housing-to-pressure regulating valve housing cap screws to 20 ft-lbs (27 Nm) torque.

Check control arm shaft oil seals. If seals are replaced use OTC driver handle No. 27488 with disks No. 27502 (1-3/16 in.) and No. 27495 (3/4 in.).

Installation

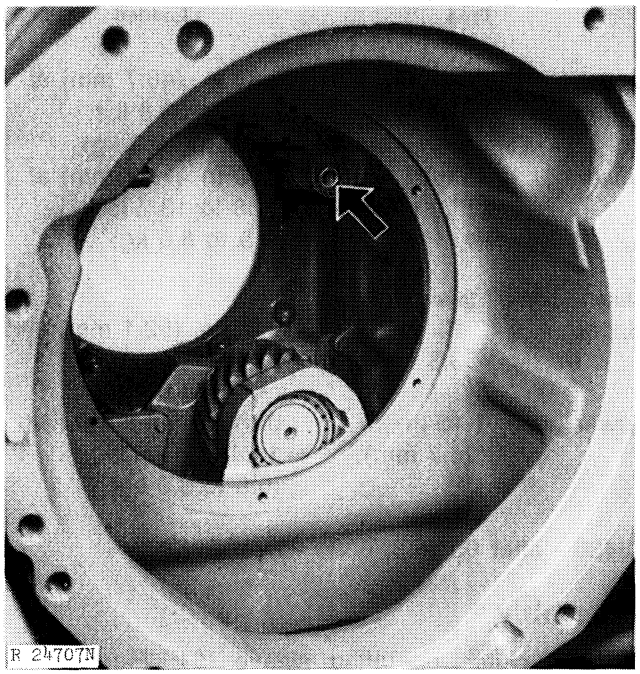

Fig. 26-Lube Packing Installed

Before installing operating piston housing, make sure the lube packing is positioned properly between the piston housing and the clutch housing (Fig. 26). DO NOT LET PACKING DROP OUT OF PLACE.

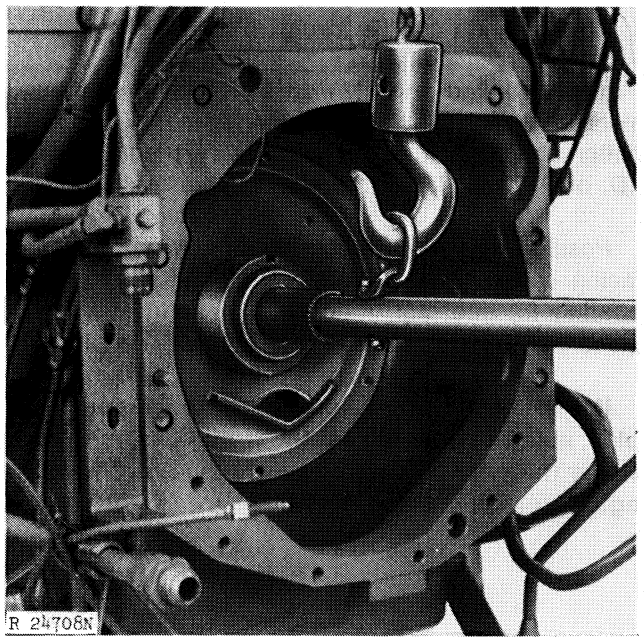

Fig. 27-Installing Operating Piston Housing

Position the operating piston housing on the special installation tool (Fig. 27). (Tool specifications are on page 50-40-15). Housing must be held upright as it is unbalanced and will rotate on tool. When positioned properly, push housing into place and install cap screws. Tighten cap screws to 35 ft-lbs (47 Nm) torque.

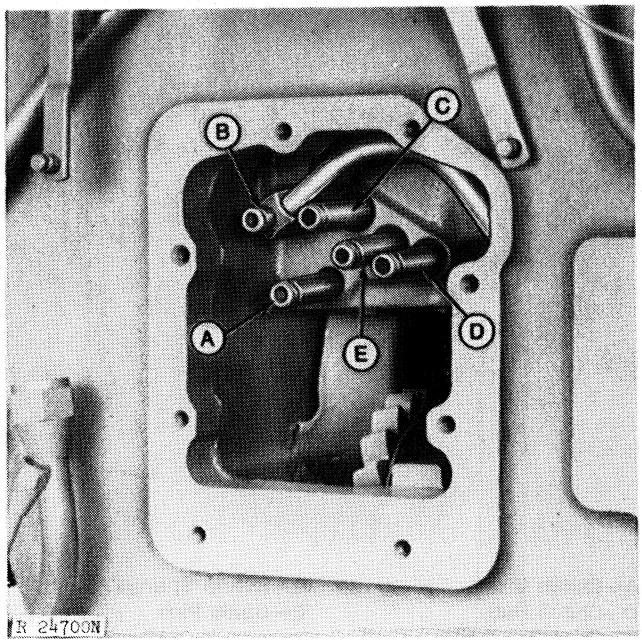

A—PTO Brake
B—PTO Clutch
C—Transmission Clutch
D—Two-Speed Planetary
E—Lube to Clutch

Fig. 28-Installing Adapters

Install clutch valve housing oil passage adapters (Fig. 28). Lubricate the O-rings on adapters before installing adapters. The longest of the adapters (A) goes in the PTO brake opening.

Install pressure regulating valve housing and tighten cap screws to 35 ft-lbs (47 Nm) torque.

Install two-speed planetary unit as instructed in Group 10, this Section.

Install clutch oil pump housing and filter relief valve housing (if removed). Tighten cap screws to 35 ft-lbs (47 Nm) torque.

Join tractor as instructed in Section 10, Group 25.

CLUTCH ASSEMBLY

NOTE: With proper system pressure to prevent slippage, adequate lubrication oil flow to provide cooling and correct initial adjustment to provide even loading, the clutch disks will have an extremely long life. If the clutch is operating properly, DO NOT disassemble clutch for inspection.

The clutch is designed so that if facing wear should occur, the transmission clutch levers will bottom on the clutch cover before the facing is completely gone. This results in a very noticeable slipping condition.

Readjusting a clutch which has excessively worn disks will destroy this relationship and may result in damage if the facing wears out. Therefore, the clutch disk specifications must be adhered to when repairing the clutch.

Removal

Separate the clutch housing from the engine as instructed in Section 10, Group 25.

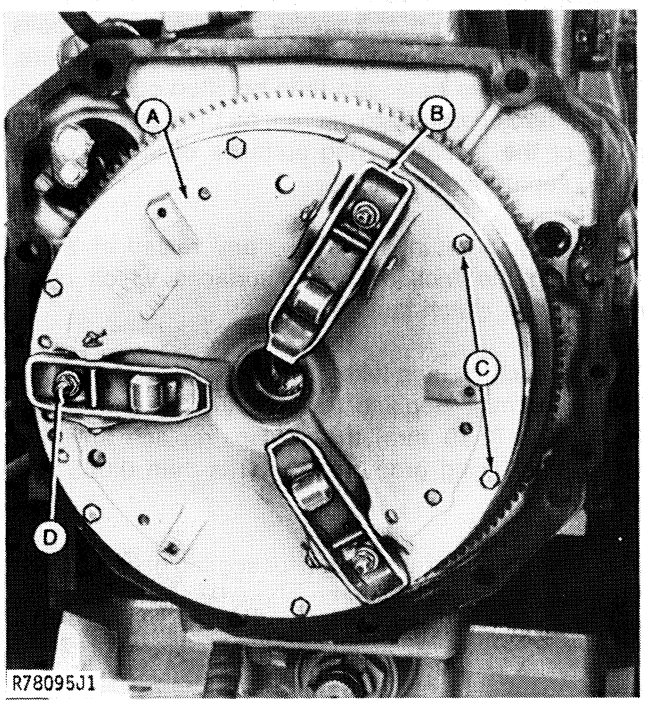

A—Clutch Cover
B—Operating Lever
C—Cap Screws
D—Operating Bolt

Fig. 29-Removing Clutch Assembly

If the clutch pack is not defective, but must be removed for servicing the engine, compress the transmission clutch pack by inserting a wedge underneath each transmission clutch lever. This will hold the pressure plate against the clutch pack and prevent the clutch disks from slipping off the clutch hub. Remove the six cap screws which retain the clutch cover to the flywheel and carefully withdraw the clutch pack.

If the clutch is defective, merely remove the cover cap screws and withdraw the pack.

Repair

The basic design of the Perma-Clutch on the 8430 and 8630 tractors are the same. The 8430 has four clutch disks and three steel separator plates; the 8630 has five disks and four plates. The 8430 has two washers on the operating bolt at the operating lever; the 8630 has one. The 8430 has an adapter pressed into the flywheel with a bushing inserted in the adapter; the 8630 utilizes a thrust washer with the bushing pressed in the flywheel.

Place the clutch pack on a bench and remove the lock and adjusting nuts from the clutch operating bolts which extend through the transmission clutch levers. The parts of the pack can then be lifted out by hand. *Handle parts carefully* to prevent damage to the clutch disks or the friction driving surfaces of the pressure plate, separators and cover.

Use crocus cloth to remove any raised or sharp edges on the friction driving surfaces which could damage the clutch facings.

The clutch facings take on a darker color with use. This is normal. Replace the clutch disks if less than 0.110 inch (2.79 mm) thick. Also, replace any disk which has facing groove depth less than 0.005 inch (0.13 mm).

Check the separator plates for scoring or wear. Plate thickness at friction surface should not be less than 0.281 in. (7.14 mm).

Check return springs for proper strength. Approximate free length is 2.22 in. (5.64 mm). With 78.7 to 96.3 lbs (350.3 to 428.1 N) compressive load, spring should measure 1.88 in. (4.78 cm) in length.

Assembly

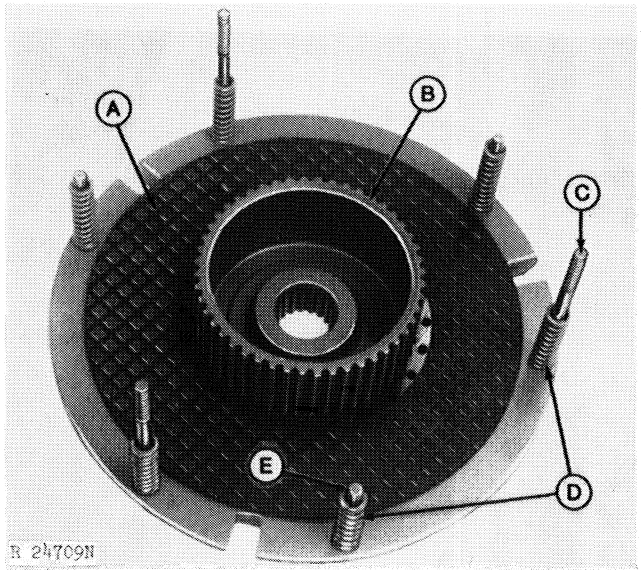

A—Clutch Disk
B—Clutch Hub
C—Operating Bolt
D—Return Springs
E—Guide Pins

Fig. 30-Clutch Hub and Return Springs Installed

Place the clutch pressure plate on work bench with finished side up. Insert the three operating bolts (C, Fig. 30) in the proper holes from the bottom side. (Place small block under bolt heads to provide support.) Bolt heads should be installed with head of bolt properly positioned in recesses on bottom side of pressure plate. Place guide pins (E) in proper holes with short end of pin down. Install return springs.

Install clutc hub (B) with cupped side out (Fig. 30). Install springs (D) on operating bolts and guide pins.

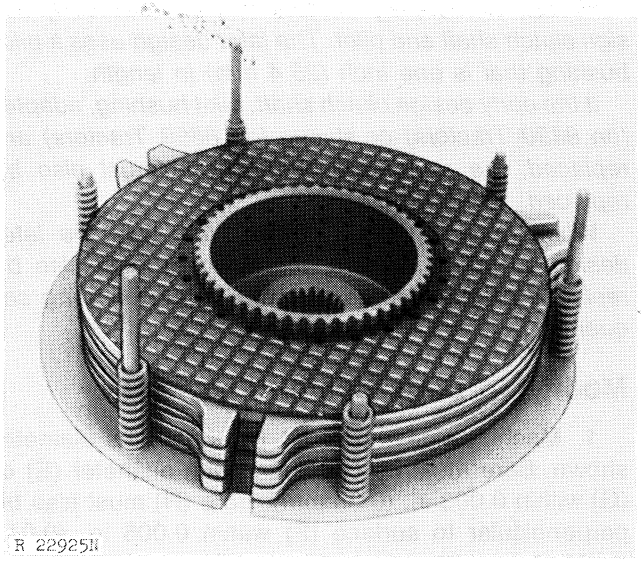

Fig. 31-Clutch Disks and Separator Plates Installed (8630 Shown)

Install a clutch disk and separator plate over clutch hub. Alternately install disks and plates in assembly. Align separator plate pin notches with notches in pressure plate (Fig. 31).

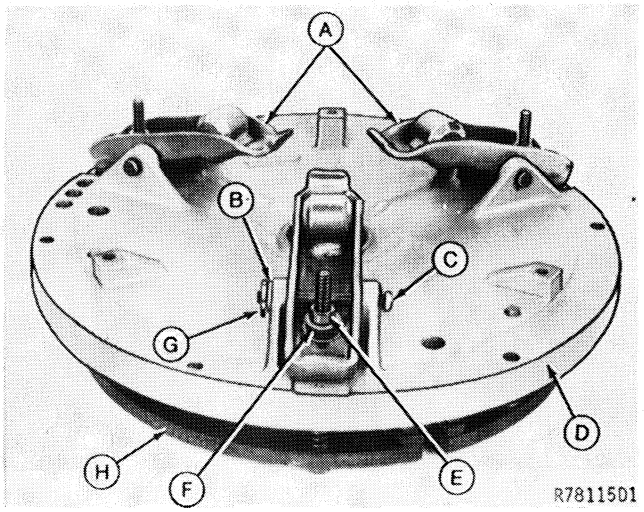

A—Operating Lever
B—Washer
C—Headed Pin
D—Clutch Cover
E—Hex Nut
F—Bearing Washer (2 used, 8440)
G—Cotter Pin
H—Pressure Plate

Fig. 32-Clutch Cover Installed (8630 Shown)

Install clutch cover with operating bolts inserted through holes in operating levers (Fig. 32). Install washers (3, Fig. 33) onto operating bolts and tighten adjusting nuts (2) to compress clutch pack. Compressing clutch pack will keep disks from slipping off hub when assembly is installed in flywheel. Do not install locking nuts at this time.

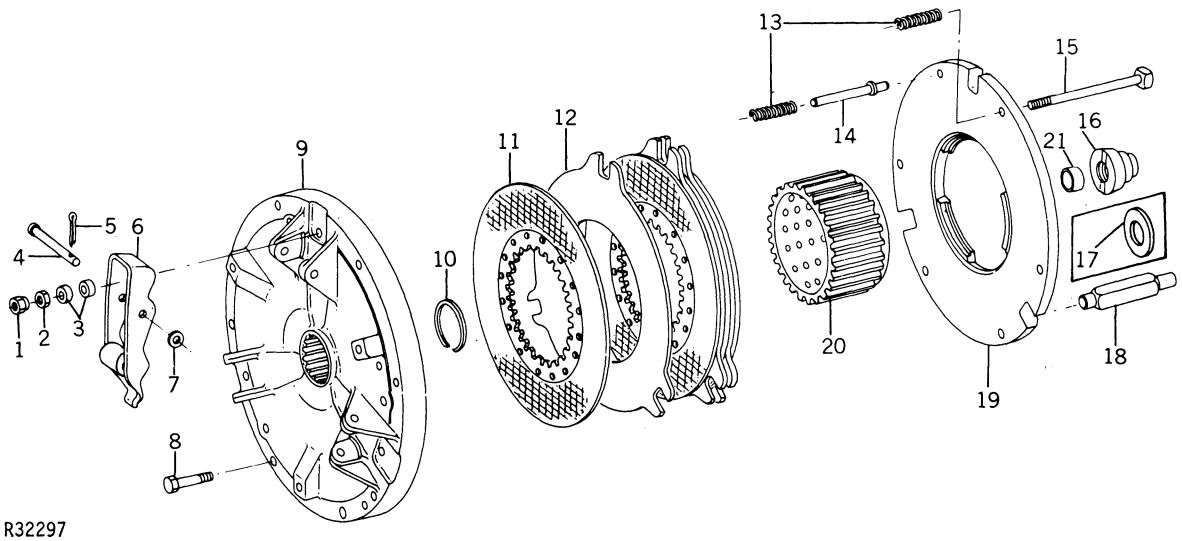

1—Lock Nut
2—Adjusting Nut
3—Washer (2 used-8430; 1 used-8630)
4—Headed Pin
5—Cotter Pin
6—Clutch Operating Lever
7—Washer
8—Cap Screw
9—Clutch Cover
10—Snap Ring
11—Clutch Disk (8430-4; 8630-5)
12—Separator Plate (8430-3; 8630-4)
13—Return Spring (6 used)
14—Headed Pin (3 used)
15—Operating Bolt (3 used)
16—Adapter (8430)
17—Thrust Washer (8630)
18—Special Pin
19—Pressure Plate
20—Clutch Hub
21—Bushing

Fig. 33-Clutch Assembly Parts

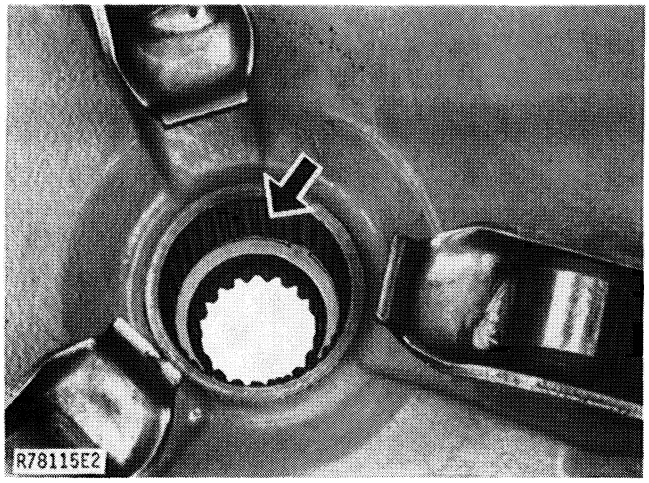

Fig. 34-Snap Ring Installed

The snap ring (Fig. 34) located in the center splined area of the clutch cover acts as a stop for the PTO drive shaft. Be sure the snap ring is installed before installing the clutch assembly in the flywheel.

NOTE: Some early tractors may have an early design clutch shaft and pilot. The later design uses a pilot bushing that is one inch (25.4 mm) in length.

If the early design clutch shaft, pilot bushing, adapter (on 8430 Tractors) or sleeve (on 8630 Tractors) are replaced, the remainder of the parts must also be replaced.

When replacing early design parts with the later design on 8630 Tractors, the flywheel must also be replaced or modified as directed in the following sequence.

Modifying Early Design Flywheels

1. Machine sleeve bore (H, Fig. 35) to the diameter shown. Bore must be concentric with diameter (E) or (G) within 0.003 in. (0.08 mm). Bore (H) must also be perpendicular to surface (F) within 0.005 in. (0.013 mm).

2. Press sleeve (D, Fig. 35 flush to 0.02 in. (0.5 mm) below surface (B). Press bushing (A) to 0.02 in. (0.5 mm) below outer surface of sleeve.

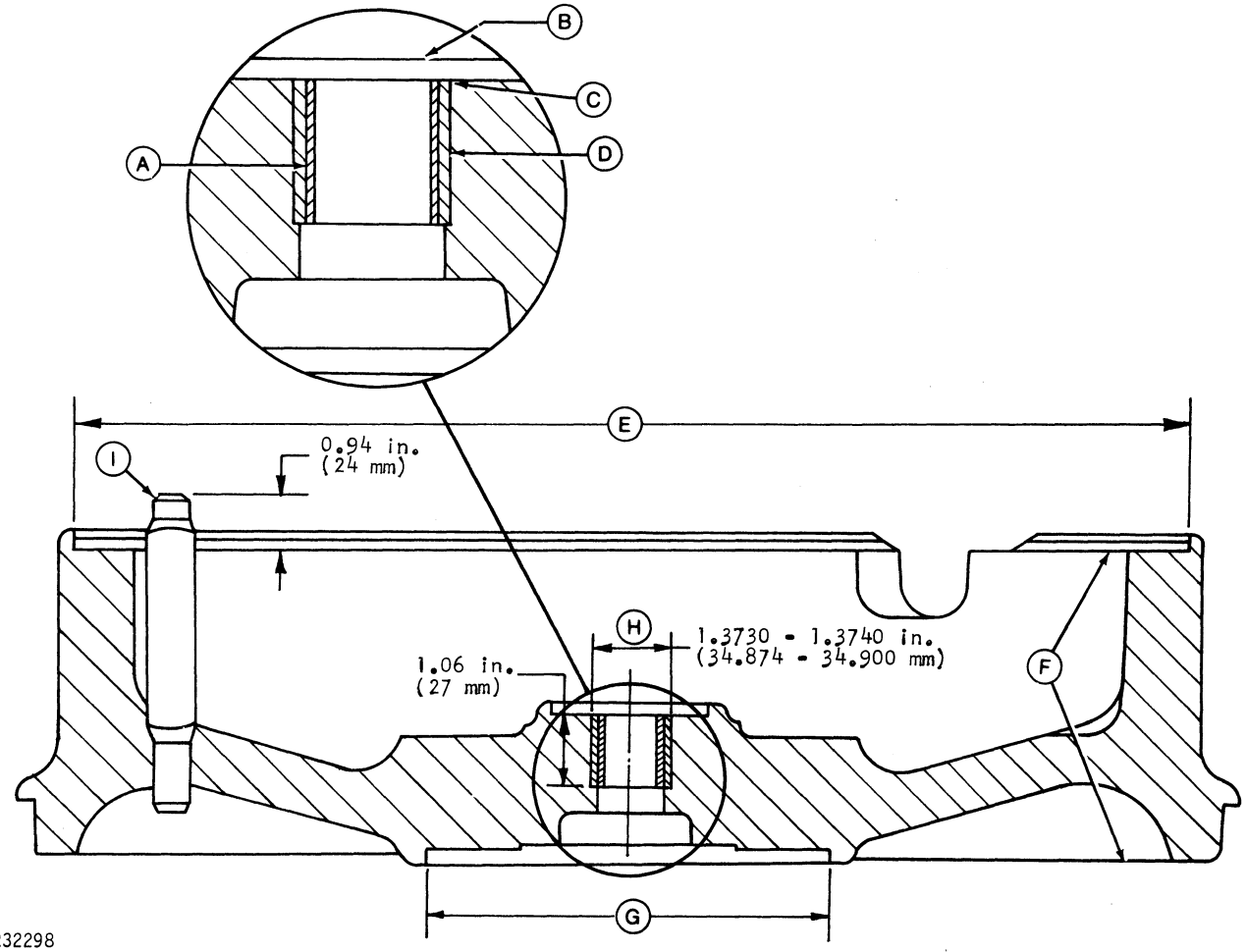

A—Bushing
B—Surface "B"
C—1.44 in. (36.5 mm) x 30° Countersink
D—Sleeve
E—Cover Diameter
F—Perpendicular Surfaces
G—Crankshaft Diameter
H—Sleeve Bore
I —Drive Pin

Fig. 35-Machining 8630 Early Flywheel

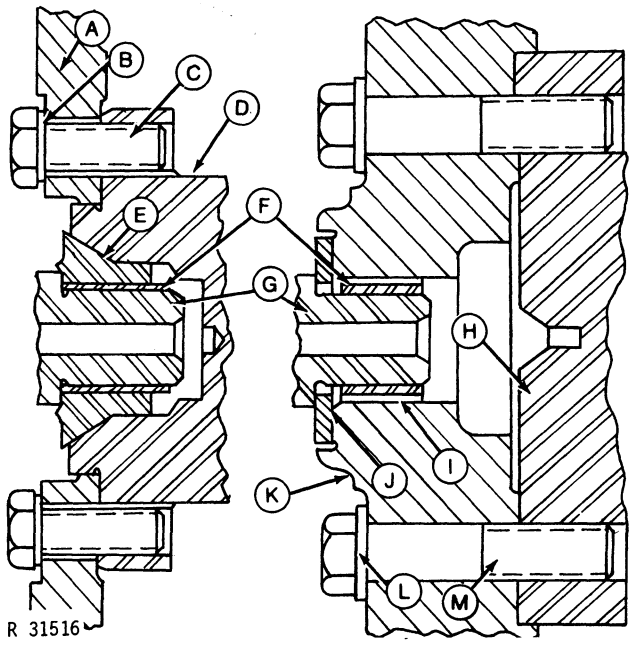

A—Flywheel
B—Washer
C—Cap Screw
D—Crankshaft
E—Pilot Adapter
F—Bushing
G—Clutch Shaft
H—Crankshaft
I —Inner Race
J —Thrust Washer
K—Flywheel
L —Washer
M—Cap Screw

Fig. 36-Flywheel Bushing Assembly (8630-right-hand side/8430-left-hand side)

1. Inspect flywheel pilot bushing (F, Fig. 36). I.D. is 1.004 to 1.006 in. (25.505-25.555 mm).

2. Inspect flywheel sleeve (I) (8630 only). I.D. is 1.1245 to 1.1250 in. (28.562-28.575 mm).

3. Install adapter (E) on 8430 or thrust washer (J) on 8630.

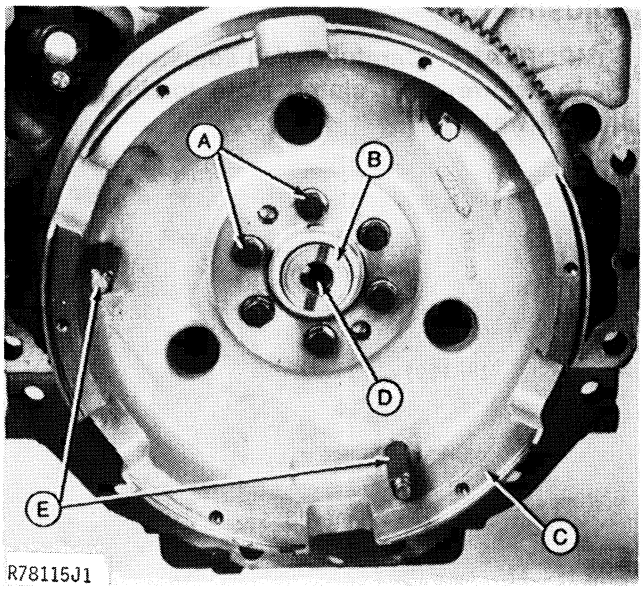

A—Cap Screws and Washers (6 used)
B—Thrust Washer (8630 only)
C—Flywheel
D—Bushing
E—Drive Pins (3 used)

Fig. 37-8630 Flywheel

4. If clutch drive pins (E, Fig. 37) are replaced, install the longer end of pin into the flywheel. Align pins with slots in clutch pressure plate.

a) On 8430 Tractors, press the pins (E) so the end of each pin is flush to 0.03 in. (0.79 mm) below the front surface of the flywheel.

b) On 8630 Tractors, press the pins (E) so the rear end of each pin is 0.94 in. (24 mm) above the clutch cover mounting surface (see Fig. 35).

5. If flywheel-to-crankshaft cap screws (A, Fig. 37) have been removed, torque 8430 screws to 85 ft-lbs (115 Nm) (11.5 kgm) and 8630 screws to 130 ft-lbs (176 Nm) (17.6 kgm).

Adjustment

IMPORTANT: Careful clutch adjustment is critical to assure even clutch plate loading and to prevent wear.

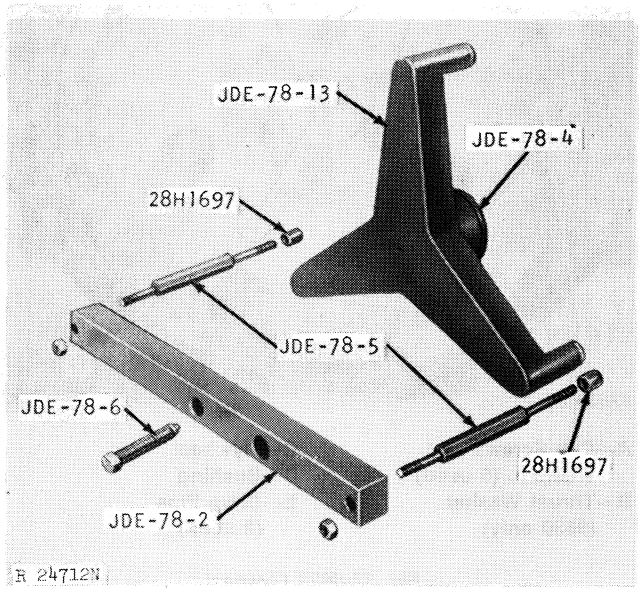

Fig. 38-Clutch Adjusting Tool

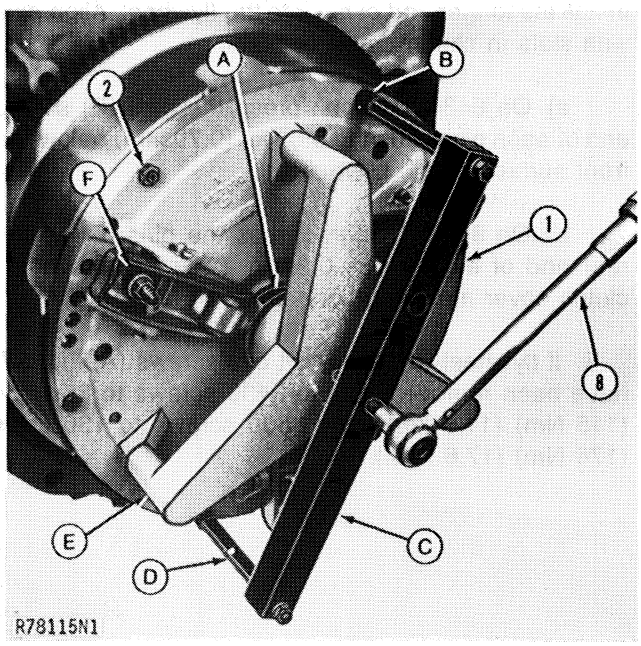

A—JDE-78-4 Ring (8630 only)
B—28H1697 Spacer
C—JDE-78-2 Cross Bar
D—JDE-78-5 Stud
E—JDE-78-13 Adjusting Tool
F—Operating Lever

Fig. 39-Installing Adjusting Tool (8630 Shown)

1. Install the clutch assembly in the flywheel.

2. Torque four of the clutch cover-to-flywheel cap screws to 35 ft-lbs (47 Nm) (4.75 kgm). Do not install the cap screw nearest the part number on the clutch cover and the screw opposite it at this time.

3. Install the adjusting tool studs (D, Fig. 39) in the remaining two holes. Install the long end of the studs through the spacers (B) and into the clutch cover.

4. On 8630 Tractors, assemble the JDE-78-4 Gauge Ring (A) on the adjusting tool.

IMPORTANT: Be sure Gauge Ring mounting screws are below flush in the ring to avoid improper adjustment.

5. Loosen the adjusting nuts on the operating levers (F) enough to allow installation of the adjusting tool.

6. Position adjusting tool (E) on clutch cover so dowel pins in tool legs fit into the holes on the raised pads of the cover.

NOTE: On some early JDE-78-13 Tools, the dowels in the legs of the fixture may be too long. Modify the fixture by cutting the dowels so they protrude from the legs 0.34 in. (8.5 mm) maximum. File the end of each dowel to a chamfer.

7. Install cross bar (C) as shown so levers are positioned under tool and cross bar screw pilots in top of adjusting tool (E).

8. Tighten the adjusting tool stud nuts and torque the cross bar screw to 20 ft-lbs (27 Nm) (2.7 kgm).

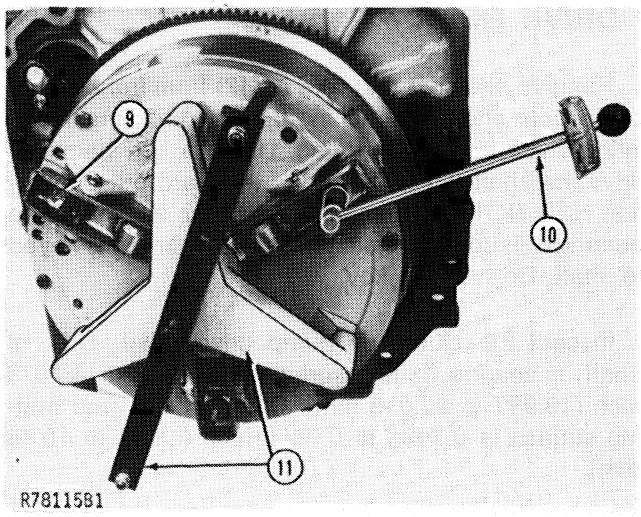

Fig. 40-Adjusting Clutch Operating Levers (8630 Shown)

9. Finger tighten each operating bolt adjusting hex nut to bring the operating levers up against the adjusting tool.

10. Torque each operating bolt nut evenly to 40 in-lbs (4.5 Nm) (0.45 kgm), then to 70 in-lbs (8 Nm) (0.8 kgm), then to 90 in-lbs (10 Nm) (1.0 kgm).

11. Remove adjusting tool.

12. Torque the remaining two clutch cover-to-flywheel cap screws to 35 ft-lbs (47 Nm) (4.75 kgm).

13. While holding the adjusting hex nuts, tighten the three lock nuts using care not to disturb the adjusting hex nuts.

14. Join the clutch housing to the engine as instructed in Section 10.

15. Torque the engine block-to-clutch housing cap screws to 300 ft-lbs (407 Nm) (40.7 kgm).

Rod Adjustment

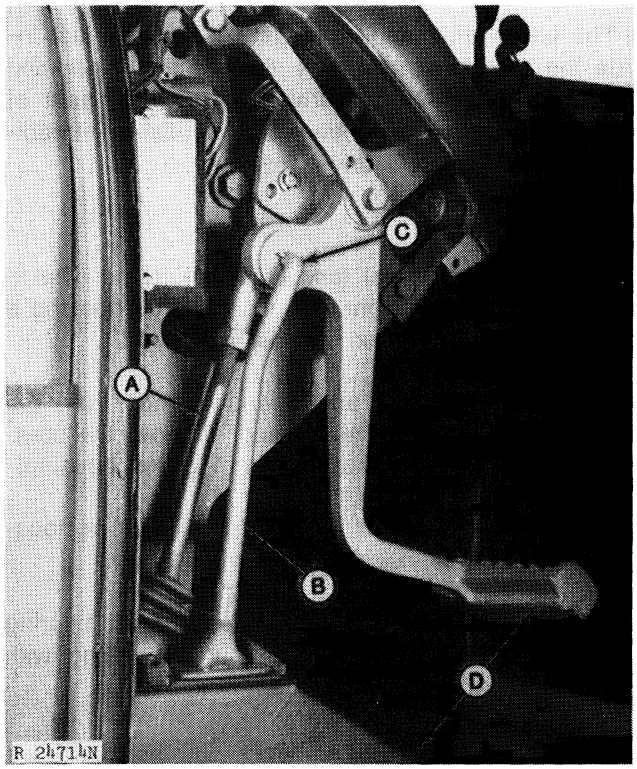

A—PTO Operating Rod
B—Clutch Operating Rod
C—Hex. Adapter Location
D—5.5 inch (14 cm)

Fig. 41-Clutch Pedal and PTO Rod Adjustment

In the clutch engaged position, the lowest part of the clutch pedal should be 5.5 in. (14 cm) above the footrest (D, Fig. 41). Make sure the clutch pedal return spring is holding the valve operating arm against the lower stop. Adjust, if necessary, by removing the cotter pin and washer from the clutch operating rod (B) and rotating the hexagon-shaped adapter (C) to obtain proper pedal height.

The PTO operating rod must be installed in the rearmost hole in the PTO lever. Loosen lock nut on PTO rod (A). With rear edge of PTO lever held 0.75 in. (1.7 cm) from rear of lever slot in instrument panel, and PTO clutch valve operating arm rotated clockwise against upper stop on valve housing, adjust PTO clutch lever rod until pin on upper rod is in line with pin hole in lever. Install snap ring on pin. Tighten lock nut on rod securely.

CLUTCH OIL PUMP DRIVE GEAR

The clutch oil pump drive gear is located just inside the pressure regulating valve housing opening into clutch housing. It is driven by the idler gear of the PTO gear train. The idler gear is located immediately below the PTO drive gear.

Repair

Remove the left fuel tank and side frame. Use a hoist to support the front grill assembly by hooking a chain to the fan shroud extension support.

Disconnect oil lines and operating rods from the pressure regulating valve housing. Remove the pressure regulating valve housing from clutch housing.

Remove the clutch oil pump filter relief valve housing and oil pump housing from front hinge.

Remove retaining ring from rear of shaft bearing by reaching through clutch oil pump opening with "squeeze type" snap ring plier.

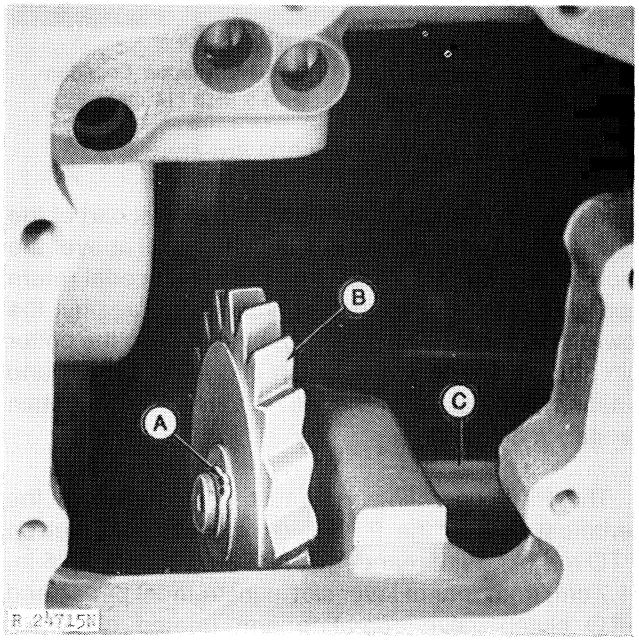

A—Retaining Ring
B—Drive Gear
C—Drive Shaft

Fig. 42-Removing Retaining Ring

Remove retaining ring (A, Fig. 42) from front end of pump gear shaft by reaching through pressure regulating valve housing opening. Using a soft hammer, drive the shaft (C) with bearing rearward out of position. DO NOT drive shaft out too far as shaft and bearing will drop into clutch housing. Gear (B) is keyed to shaft. Do not lose key.

Inspect the clutch oil pump drive shaft. O.D. of shaft at bearing mating surface is 0.7873 to 0.7879 inch (19.997 to 20.013 mm). O.D. at drive gear mating surface is 0.7495 to 0.7505 inch (18.92 to 19.18 mm).

Check the I.D. of the bearing. Measurement should be 0.7870 to 0.7874 inch (19.198 to 19.199 mm).

Installation

Install new bearing on shaft until bearing inner race bottoms on lip of shaft.

Install shaft with bearing into clutch housing bore. Install retaining ring in clutch housing to retain bearing.

Position Woodruff key in shaft slot and install gear on shaft. Install retaining ring on shaft end.

Install plate near filter relief valve housing opening in front hinge with the transfer oil pickup pipe and clutch oil pump drive shaft in place. Tighten cap screws securely.

Install clutch oil pump housing and filter relief valve housing. Tighten filter relief valve housing cap screws to 35 ft-lbs (47 Nm) torque.

Install oil pipes, side frame, and fuel tank. See Section 10, Group 25 for instructions.

Group 10
QUAD-RANGE PLANETARY

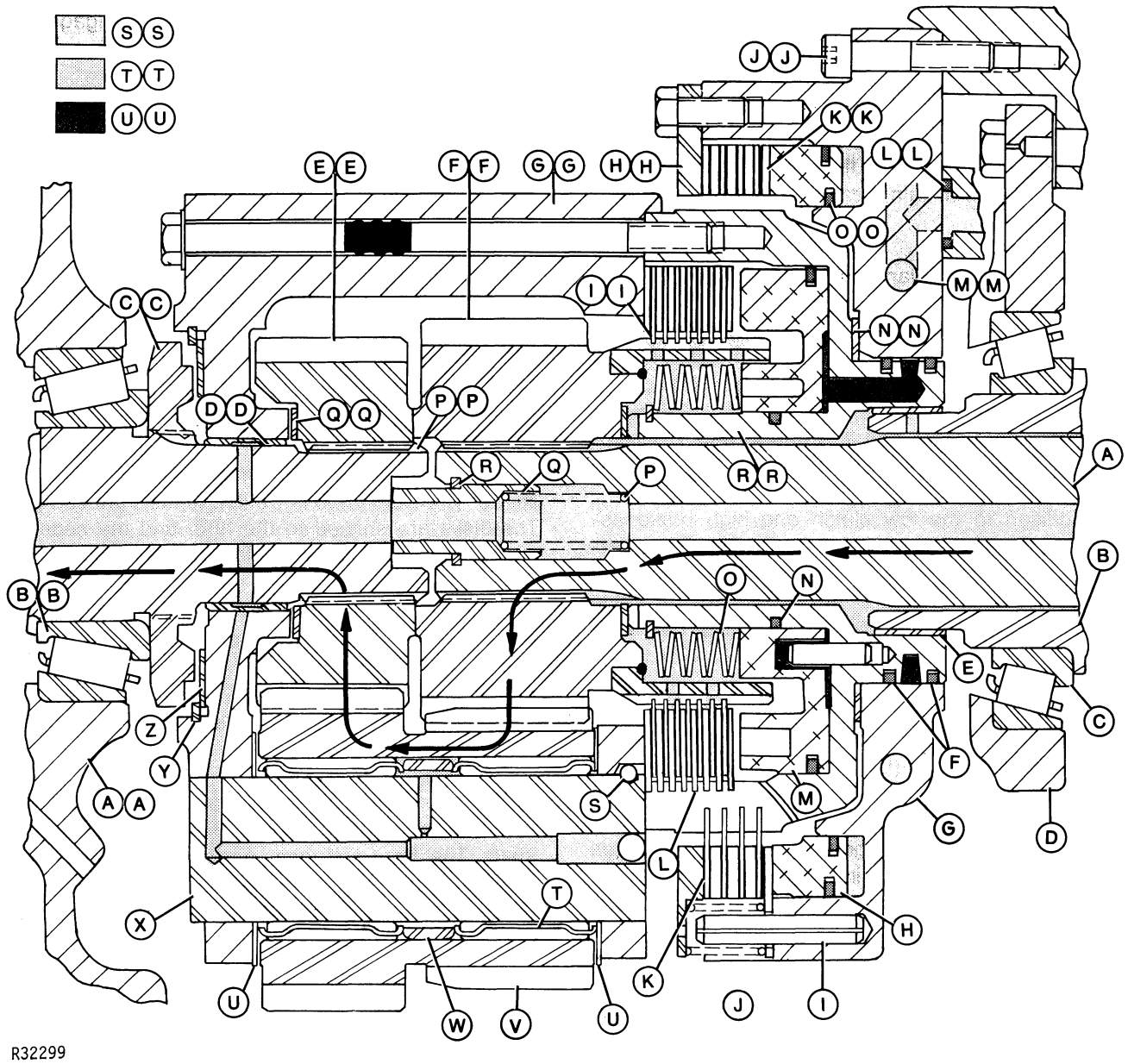

R32299

A—Clutch Shaft
B—Clutch Oil Pump Drive Gear
C—Drive Gear Rear Bearing
D—Rear Bearing Quill
E—Bushing
F—Sealing Rings
G—High Brake Housing
H—High Brake Piston
I —Spring Pin
J —Return Spring
K—Brake Disk (4 used)
L—Clutch Separator Plate (8 used)
M—Low Clutch Piston
N—Rubber Packing
O—Return Spring Washers (8 used)
P—Spring
Q—Hex. Bushing
R —Snap Ring
S —Retaining Ball
T —Caged Needle Bearing
U —Thrust Washer
V —Planet Pinion
W—Spacer
X —Planet Pinion Shaft
Y—Snap Ring
Z—Thrust Washer
AA—Output Quill
BB—Clutch Output Shaft Bearing
CC—Locking Nut
DD—Bushing
EE—Rear Sun Pinion
FF—Front Sun Pinion and Hub
GG—Planet Pinion Carrier
HH—High Brake Backing Plate
II—Low Clutch Disks (7 used)
JJ—Special Socket-Head Cap Screw
KK—High Brake Separator Plate (4 used)
LL—Rubber Packing
MM—Clutch Pressure Oil Passage
NN—Thrust Washer
OO—Rubber Packing
PP —Output Yoke
QQ—Thrust Washer
RR—Low Clutch Drum
SS —Clutch Pressure Oil
TT —Lube Pressure Oil
UU—Return Oil

Fig. 1-Two-Speed Planetary (Overdrive Applied)

Litho in U.S.A.

GENERAL INFORMATION

The Quad-Range transmission is comprised of two major components: the Quad-Range two-speed planetary (Fig. 1) which is located in the clutch housing and attached to the rear of the operating piston housing, and the Quad-Range transmission which is an eight-speed combination synchronized and collar-shift transmission located in the transmission case.

The two-speed planetary supplies power from the engine to the transmission through a drive shaft and a three-gear power train located in the Torque Divider.

The Quad-Range planetary is a hydraulically-shifted two-speed unit consisting of a low clutch (direct drive) and a high brake (overdrive). Shifting of the speeds is controlled by the speed selector lever located in the control console at the right side of the operator. A lateral movement of the lever produces a power shift between 1 and 2, 3 and 4, and 1 reverse and 2 reverse.

In addition to the low clutch and high brake assemblies, a compound planetary provides the difference between gear speeds. The shift valve is moved by pressure oil being directed by the control valve which in turn is moved by the mechanical operating rods.

The direct drive clutch assembly consists of seven paper-faced disks (II, Fig. 1) alternated with eight steel separator plates (L). The disks and plates are packed on a clutch hub (FF) which is splined to the transmission clutch shaft. The hub is an integral part of the front planetary sun gear. The separator plates have outer tangs which fit into slots in the low clutch drum (RR). The clutch drum is attached to the planet pinion carrier (GG) by six long cap screws.

The overdrive brake assembly consists of four paper-faced brake disks (K) alternated with four steel separator plates (KK). The brake disks have tangs on the inside diameter which engage with the low clutch drum. The plates have outer tangs which engage with the high brake drum (G). A heavy backing plate fits over the brake pack and is attached by cap screws to the high brake drum.

Both the clutch and brake packs are engaged by annular hydraulic pistons (H and M) and are positively disengaged by springs (brake) (J) or spring washers (clutch) (O) acting on the piston.

Whenever the clutch or brake pack is engaged, the other one is disengaged.

The planetary assembly consists of the planet pinion carrier (GG) (which is attached to the low clutch drum and thereby connected to the clutch separator plates and disks), three planet pinions (V), and two sun gears (EE and FF). The input sun gear is splined to the clutch shaft (and connected to the clutch disks by the hub being a part of the front sun gear) and is in mesh with the smaller of the planet pinion gears. The rear sun gear is splined to the clutch output yoke and is in mesh with the larger of the planet pinion gears.

Direct Drive Power Flow

At the input end, the clutch shaft is driven at engine speed. The clutch hub is welded to the front sun gear. The disks are splined to the hub, and the separator plates are tanged to the clutch drum.

During a direct-drive shift, pressure oil directed by the shift valve causes the piston to compress the clutch disks and plates into a solid unit. Now the planet pinion carrier, attached to the clutch drum, rotates in the same direction and at the same rpm as the clutch shaft.

The small gear of the planet pinions is in mesh with the front sun gear which is splined to the clutch shaft. The front sun gear and planet pinion carrier, therefore, are "locked" together. The rotating force of the carrier is transmitted to the output sun gear through the other gear of each planet pinion.

The power flow continues from the output sun gear through the clutch output yoke and is directed by the power train to the transmission.

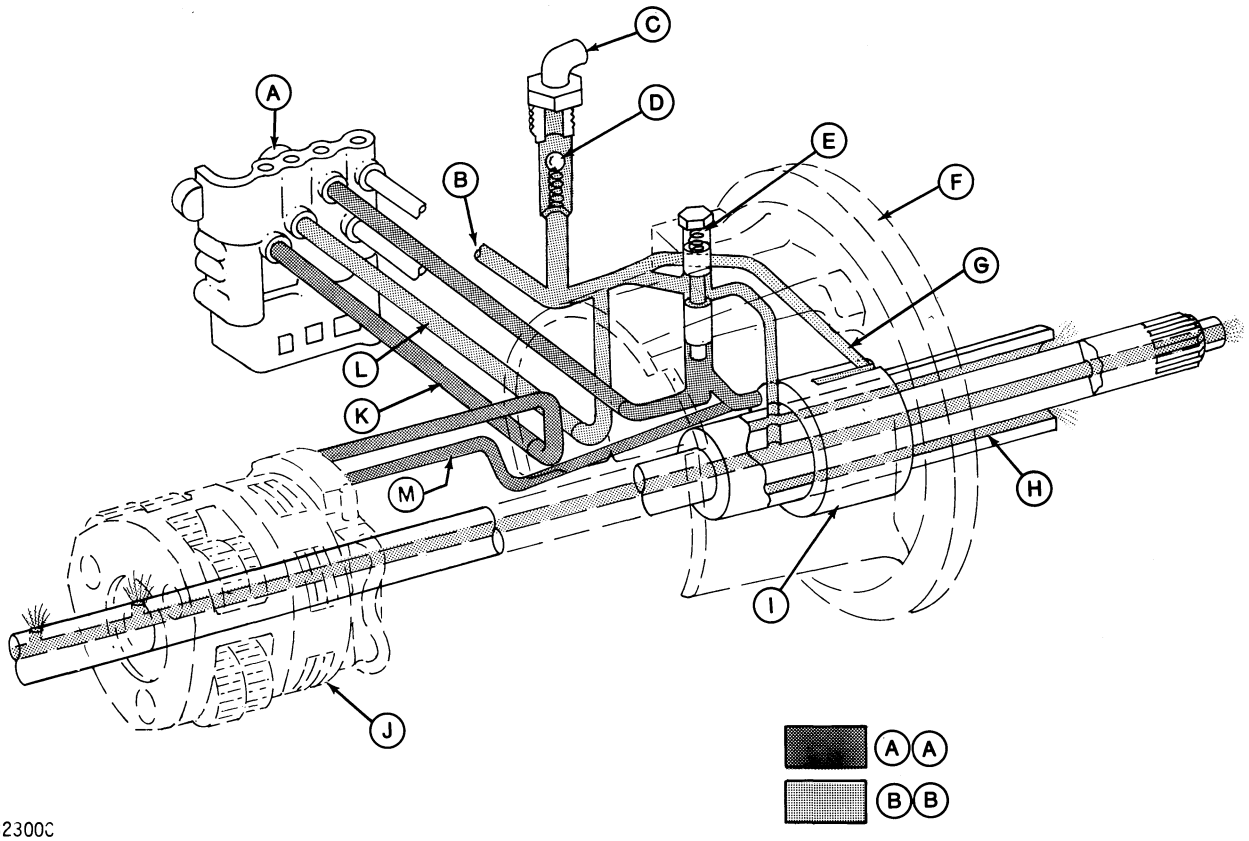

A—Clutch Valve Housing
B—To Oil Filter Housing
C—From Oil Cooler
D—Return Oil Check Valve
E—Lube Reduction Valve
F—Operating Piston Housing
G—Lube Passage for Thrust Bearing
H—Oil to Clutch Disks
I —Operating Piston
J —Two-Speed Planetary
K —Engaging Oil
L —Lube Oil
M —To Planetary Shift Valve
AA—Pressure Oil
BB—Lube Oil

Fig. 2-Oil Flow of Planetary System

Overdrive Power Flow

The overdrive brake housing is fastened to the clutch operating piston housing which is attached to the clutch housing. Therefore, any component that is controlled by the brake stops when the brake is engaged.

The brake disks are tanged to the clutch drum which is attached to the planet pinion carrier. The separator plates are tanged to the brake housing.

During the overdrive shift (Fig. 1), pressure oil directed by the shift valve engages the brake piston to stop the disks' rotation and form a solid unit with the separator plates. This stops rotation of the planet pinion carrier. Now the planet pinions function as countershafts, transmitting power from the clutch shaft to the front sun gear, from the sun gear to the planet pinion, to the rear sun gear, and finally to the clutch output yoke. The different gear ratio causes the increase in speed.

Oil Supply

Lubrication oil to the two-speed Power Shift planetary is supplied through the operating piston housing (F, Fig. 2). When the clutch valve is engaged, the lubrication reduction valve (E) is pushed up (see Group 5, Fig. 7) and lube oil is directed through the operating piston housing to the clutch shaft then rearward to the planetary. An opening in the output yoke to the rear bushing supplies oil for bushing lubrication and another passage through the planet pinion carrier routes oil to the planet pinion shafts for needle bearing lubrication.

Lubrication for cooling the clutch and brake packs comes from the operating piston housing between the clutch pump drive shaft (PTO shaft) and the clutch shaft. Notches between the clutch drum and front sun gear thrust washer route oil to the inside of the clutch hub, out through holes in the hub to the clutch disks, and finally to the brake disks.

A constant flow of system pressure oil (K, Fig. 2) is supplied to the two-speed planetary via the pressure regulating valve housing whenever the engine is running.

Another line (Fig. 2) brings oil from the clutch valve whenever the clutch is engaged. Both lines come from the operating piston housing to the high brake housing. The path of oil is then determined by the control valve and shift valve to engage the proper element.

Control Valve Assembly

Located in the overdrive brake housing is the control valve (B, Fig. 3) for the two-speed planetary. It is controlled by lateral movement of the speed selector lever. The detented control valve directs oil at system pressure or clutch engagement pressure to operate the detented.

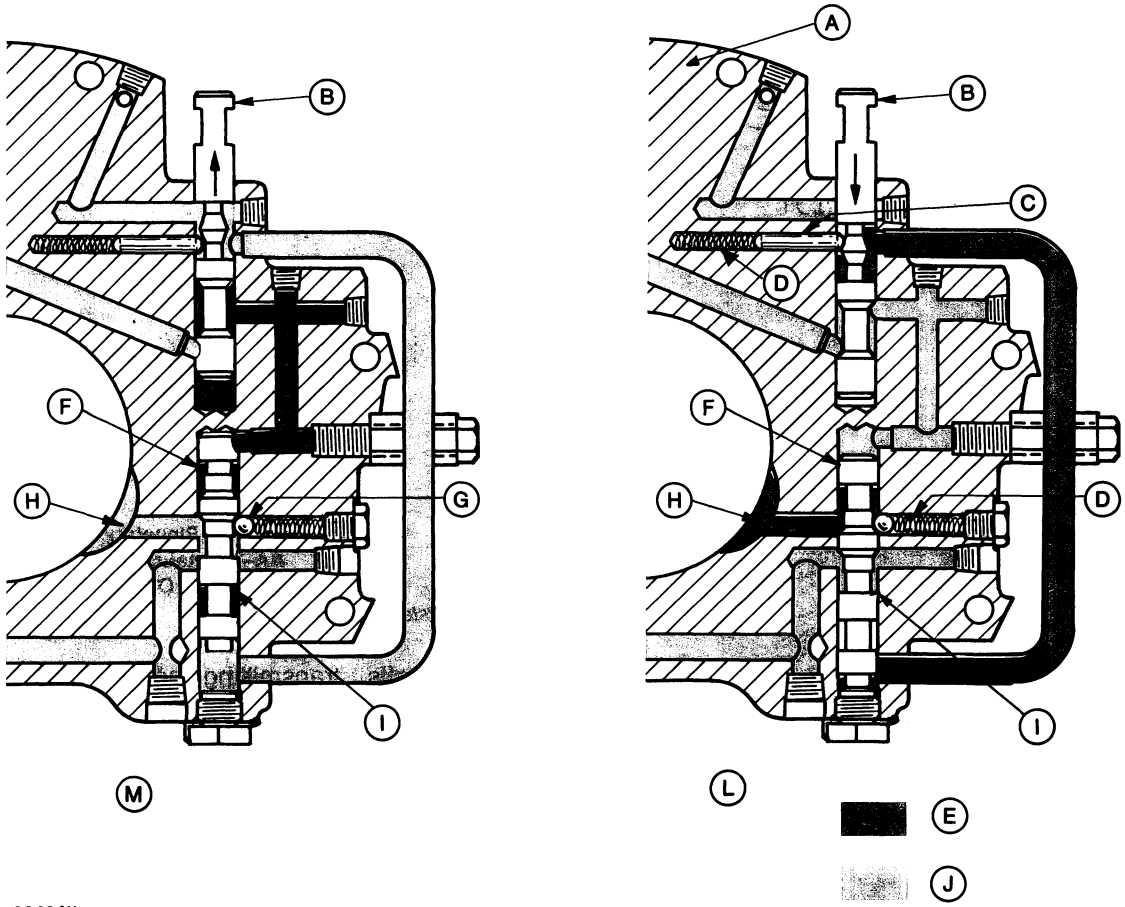

R 28684N

A—Overdrive Brake Housing
B—Control Valve
C—Detent Pin
D—Detent Spring
E—Return Oil
F—Shift Valve
G—Detent Ball
H—Passage to Direct Drive Clutch
I —Passage to Overdrive Brake
J —Pressure Oil
K—Passage to Sump
L—Overdrive Operation
M—Direct Drive Operation

Fig. 3-Control Valve and Shift Valve Operation

shift valve (F). The shift valve routes oil to the direct drive clutch or the overdrive brake and returns oil from the opposite element. Having two valves prevents the possibility of the operator stopping the shift in a neutral position which in turn would cause the planetary pack to rotate at high speed.

DIAGNOSING MALFUNCTIONS

Transmission Clutch Slippage

Restricted filter
Low system pressure
Low clutch pump output
Low transmission oil level

Slippage in First and Third Speeds

Seal leaking on direct drive clutch piston
Plug leaking or missing from brake housing
Direct drive clutch disks worn excessively
Packing missing between operating piston housing and brake housing
Clutch drum sealing rings leaking or missing

Slippage In Second and Fourth Speeds

Seals on overdrive brake piston leaking
Plug missing or leaking in brake housing
Overdrive brake disks worn excessively
Packing missing between operating piston housing and brake housing

No Change In Speed When Moving Speed Selector Laterally

Linkage broken or disconnected
Shift valve stuck
Low system pressure

Noise In Clutch Housing (Clutch Engaged)

Clutch output yoke bearing defective
Planetary carrier rear bushing defective

Low System Pressure

Restricted oil filter
Low transmission oil level
Clutch oil pump output inadequate
Clutch oil pump failure
Pressure regulating valve spring weak or broken
Stuck oil filter relief valve
Gasket between clutch valve housing and pressure regulating valve housing leaking
Clutch oil pump filter relief valve housing gasket leaking excessively
O-rings on adapters behind clutch valve housing leaking or missing
Excessive leakage in Perma-Clutch

TESTING

If transmission malfunction is detected or suspected, check the condition of the oil filter before conducting any tests. Be sure that the filter relief valve is operating properly. The transmission must be supplied with an adequate volume of clean oil for proper operation.

Pressure Test

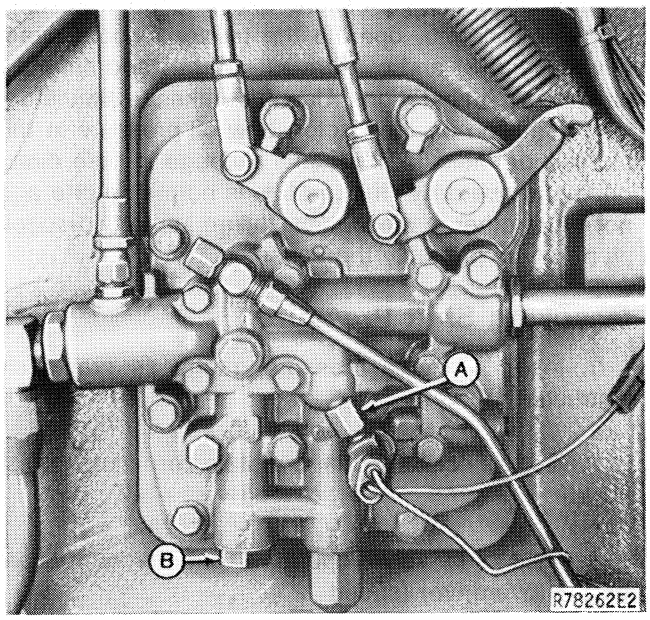

A—Test Plug **B—Pressure Regulating Valve Plug**

Fig. 4-Test Plug Location (Late Model)

To check system pressure, install a 0-300 psi (0-2067 kPa) pressure gauge at the clutch test plug on the left side of the clutch housing (Fig. 4). On later models, connect the pressure gauge to the tee at the clutch test plug.

Run the engine at 2000 rpm. With oil at operating temperature, observe the pressure with the Hi-Lo control valve operating arm in both the forward position (direct drive) and rear position (overdrive). Correct oil pressure is 170 to 180 psi (1172 to 1240 kPa).

If pressure for one circuit is 10 psi (68 kPa) below the pressure for the other, excessive leakage is indicated for the respective circuit. If both positions result in low pressure, install a guage in the PTO clutch (Group 15) test location. If this pressure is also low adjust system pressure. If the pressure is normal, the problem is in the clutch valve circuit, oil route connections, or both elements of the planetary are leaking excessively.

Litho in U.S.A.

Pressure Test—Continued

To adjust system pressure, remove the hex. plug from the bottom of the pressure regulating valve housing (B, Fig. 4) and add or deduct shims below pressure regulating valve springs. One shim equals approximately 5 psi (34 kPa).

Cycle Test

After completing pressure test and no trouble in high-low is found, operate the tractor in both direct drive (1 and 3) and overdrive (2 and 4) and carefully observe both operations. Use the brakes to simulate a load condition on the tractor. Low oil pressure in the unit will be indicated by equal slippage in both direct drive and overdrive. If operation is normal in one and not in the other, a mechanical failure in the two-speed planetary is probably the cause.

Checking Shift Pressure

1. Install a clutch pressure gauge as previously instructed.

2. Depress clutch pedal to obtain zero clutch pressure.

3. Shift hi-lo valve operating arm to its forward detent (overdrive) (speed "2").

4. Shift hi-lo valve operating arm to its rear detent position (direct drive) (speed "1").

5. Engage clutch slowly observing clutch pressure as hi-lo shifts.

Hi-lo should shift between 17 and 30 psi (1.17 and 2.07 bar) (1.19 and 2.11 kg/cm²).

REPAIR

Removal

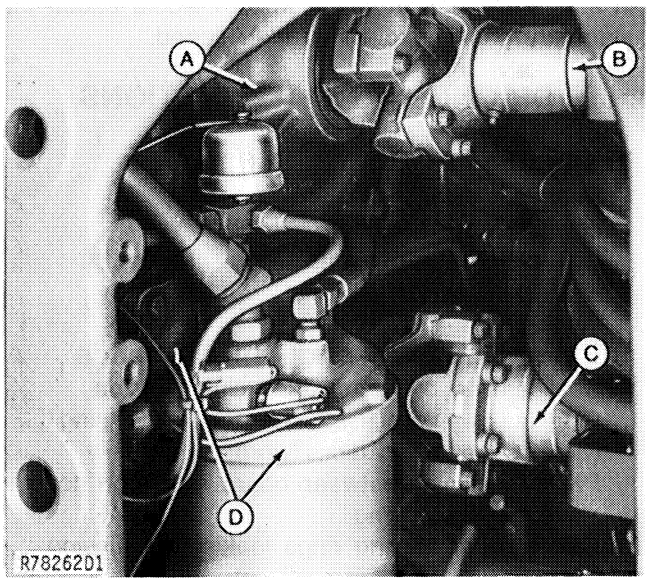

A—Bearing Quill
B—U-Joint
C—PTO Telescoping U-Joint
D—Filter Housing

Fig. 5-Rear Bearing Quill

The two-speed planetary can be removed without separating the tractor. With the tractor in a sharp right turn, remove the upper drive shaft U-joint (B, Fig. 5).

Shut off engine and remove key.

⚠ CAUTION: Never perform service on the hinge area of the tractor while the engine is running. Stay clear of the hinge until the engine is stopped. Always use extreme care when doing maintainance on the tractor while engine is running.

Disconnect the steering feedback cylinder return oil line at filter housing. Disconnect vent hose from output yoke bearing quill (A).

Remove cap screws from rear planetary bearing quill. There are two jack screw holes (A, Fig. 5) on opposite sides of the bearing quill. Insert two of the cap screws that were removed into the holes and screw cap screws in evenly until bearing quill can be removed from clutch housing.

NOTE: The following removal procedure is suggested because the planetary unit is heavy and has poor accessibility. The unit may be removed in two pieces—first the planetary, then the clutch and brake assembly.

If the unit is removed in two pieces, remove the six backing plate-to-brake housing cap screws using a swivel socket and remove the planetary. Then remove the five special socket-headed cap screws and remove the brake drum.

Note that the brake return springs are free to fall to the bottom of the clutch housing.

⚠ CAUTION: Two-speed planetary assembly is heavy and space to work is somewhat limited. Use caution when removing to prevent undue back strain.

1. Use a 1/4 inch Allen wrench socket adapter to remove the five special socket-head cap screws which attach the planetary brake housing to the clutch operating piston housing.

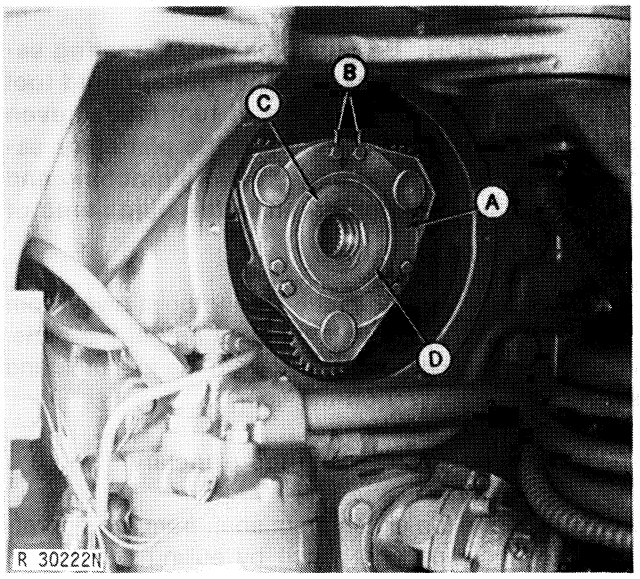

A—Two-Speed Planetary
B—Cap Screws
C—Thrust Washer
D—Snap Ring

Fig. 6-Rear Bearing Quill Removed

2. Slide planetary assembly (A, Fig. 6) rearward far enough to be free from inner arm and rotate the brake housing so the oil tube is up and slightly to the left.

3. Remove clutch oil sender from top of oil filter relief valve housing.

4. Cap all fittings and adjust hoses so they will not be damaged during removal.

IMPORTANT: As planetary is removed, use care not to damage any external oil lines. This is possible using care and the tool shown in Figs. 7 and 8. See Group 40 for instructions on making the removal tool.

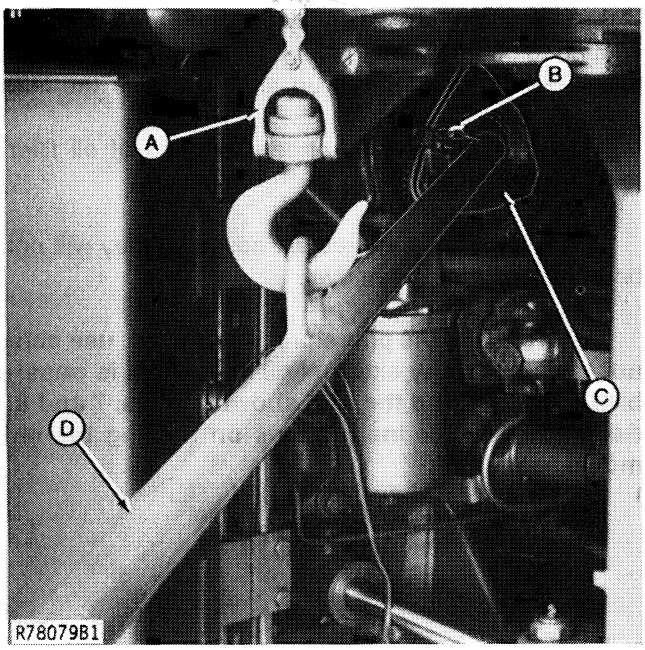

A—Overhead Hoist
B—Attaching Chain
C—Planetary Assembly
D—Removal Tool

Fig. 7-Installing Removal Tool

5. Install removal tool in I.D. of planetary and attach small chain (B, Fig. 7) of tool to planetary carrier. Chain prevents carrier from rotating on tool and from slipping from tool.

6. Attach a chain (A) from an overhead hoist to the removal tool so the handle of the tool is parallel to the floor.

7. While standing at the end of the tool for leverage, move the tool and planetary from the clutch housing straight rearward until the brake backing plate is nearly flush with the rear of the front hinge.

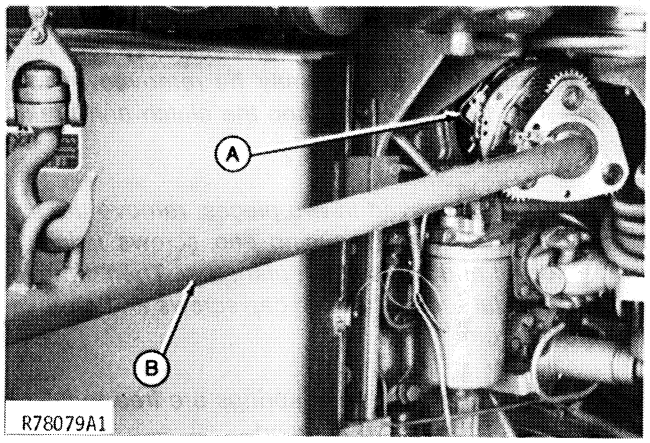

A—Oil Tube
B—Removal Tool

Fig. 8-Removing Planetary Assembly

8. Move the removal tool toward the fuel tank (rotating the planetary assembly).

9. If the shift valve oil tube (A, Fig. 8) is not in the approximate position shown, rest the weight of the planetary on the hinge and rotate the brake housing as shown.

⚠ CAUTION: Be sure planetary is resting securely. Also have another person hold tool (B) from moving. If outer end of tool moves even slightly, the resulting motion of the planetary assembly and tool could cause severe pinching and crushing injury to the person in the hinge area of the tractor.

10. While moving the tool (B) and hoist away from the tractor, use care not to damage any of the parts. Rotate the tool slightly further toward the fuel tank and set the planetary unit on the floor.

11. Remove the tool from the planetary.

12. Remove the clutch drive shaft from the operating piston housing and clutch by pulling it rearward through the front hinge.

Disassembly and Inspection

Place planetary on workbench with protruding ring on carrier up. Place high brake housing assembly on bench with flat side of housing down.

The long carrier-to-clutch drum cap screws may have a molded rubber sleeve on the shank of the cap screw. If rubber sleeve is NOT on cap screw, replace cap screws with ones that do have the sleeve. See tractor parts catalog for correct replacement.

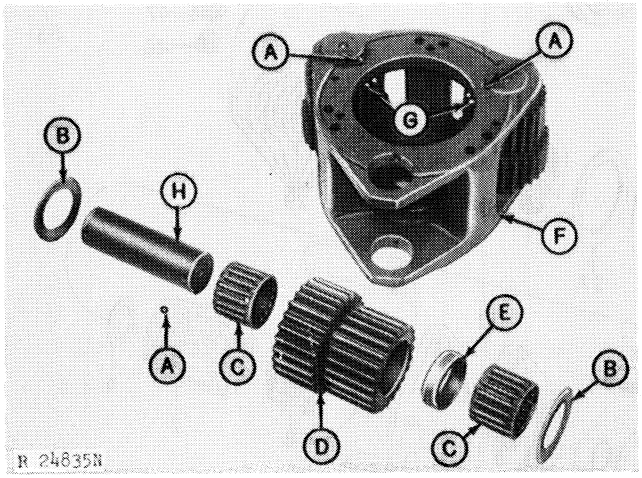

A—Ball
B—Thrust Washer
C—Bearings
D—Pinion
E—Spacer
F—Carrier
G—Timing Marks
H—Pinion Shaft

Fig. 9-Planet Pinion and Planet Pinion Carrier

Remove rear sun gear (8, Fig. 11) from planetary. Push planet pinion shafts (H, Fig. 9) out of planet pinion carrier (F). DO NOT lose retaining balls (A) in ends of shafts.

Planet pinion shaft O.D. is 1.4996 to 1.5000 in. (3.809 to 3.810 cm) and 4.78 in. (12.14 cm) in length. I.D. of the planet pinion gear (D) is 1.8758 to 1.8764 in. (4.7645 to 4.7661 cm) and length is 3.527 to 3.533 in. (8.958 to 8.974 cm). Thickness of the planet pinion thrust washers (B) is 0.036 in. (0.91 mm).

I.D. of bushing in rear of planet pinion carrier (13, Fig. 8) is 1.6345 to 1.6365 in. (4.1504 to 4.1580 cm).

Thickness of rear planetary carrier thrust washer (14) is 0.0870 to 0.0990 in. (2.210 to 2.515 mm).

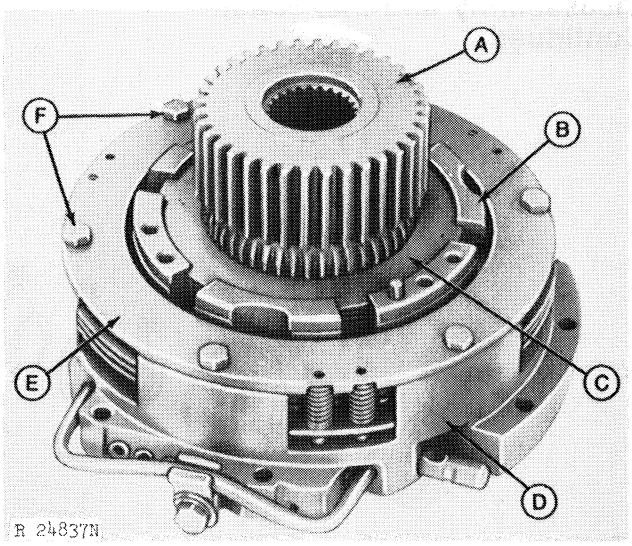

A—Clutch Hub
B—Clutch Drum
C—Clutch Plates and Disks
D—Brake Housing
E—Backing Plate
F—Cap Screws

Fig. 10-Disassembling High Brake (Early Model)

Remove the six cap screws (F, Fig. 10) retaining backing plate (E) to high brake housing (D). There are four brake disks (24, Fig. 8) and four separator plates (30) in the high brake pack. Separator plate thickness is 0.085 to 0.095 in. (2.16 to 2.42 mm). Brake disks new thickness is 0.087 to 0.093 in. (2.21 to 2.37 mm). Check depth of groove. Replace any disk if groove is 0.002 in. (0.05 mm) or less.

Check return springs (25, Fig. 11) for correct strength. Approximate free length is 1.16 in. (2.95 mm). With 13.5 to 16.5 lbs. (60 to 73.4 N) compressive load, length should be 0.95 in. (2.41 mm).

Remove the clutch drum from the brake housing (Fig. 10).

Remove the disks (26, Fig. 11) and separator plates (27) from the low clutch drum (35) and examine.

Low clutch pack has 7 disks and 8 separator plates. Plate thickness is 0.055 to 0.065 in. (1.511 to 1.537 mm). Disk thickness is 0.070 to 0.075 in. (1.80 to 1.90 mm). Measure depth of groove. Replace any disk if groove is 0.002 in. (0.05 mm) or less.

Minimum new part facing thickness is 0.012 in. (0.3 mm).

Disassembly and Inspection—Continued

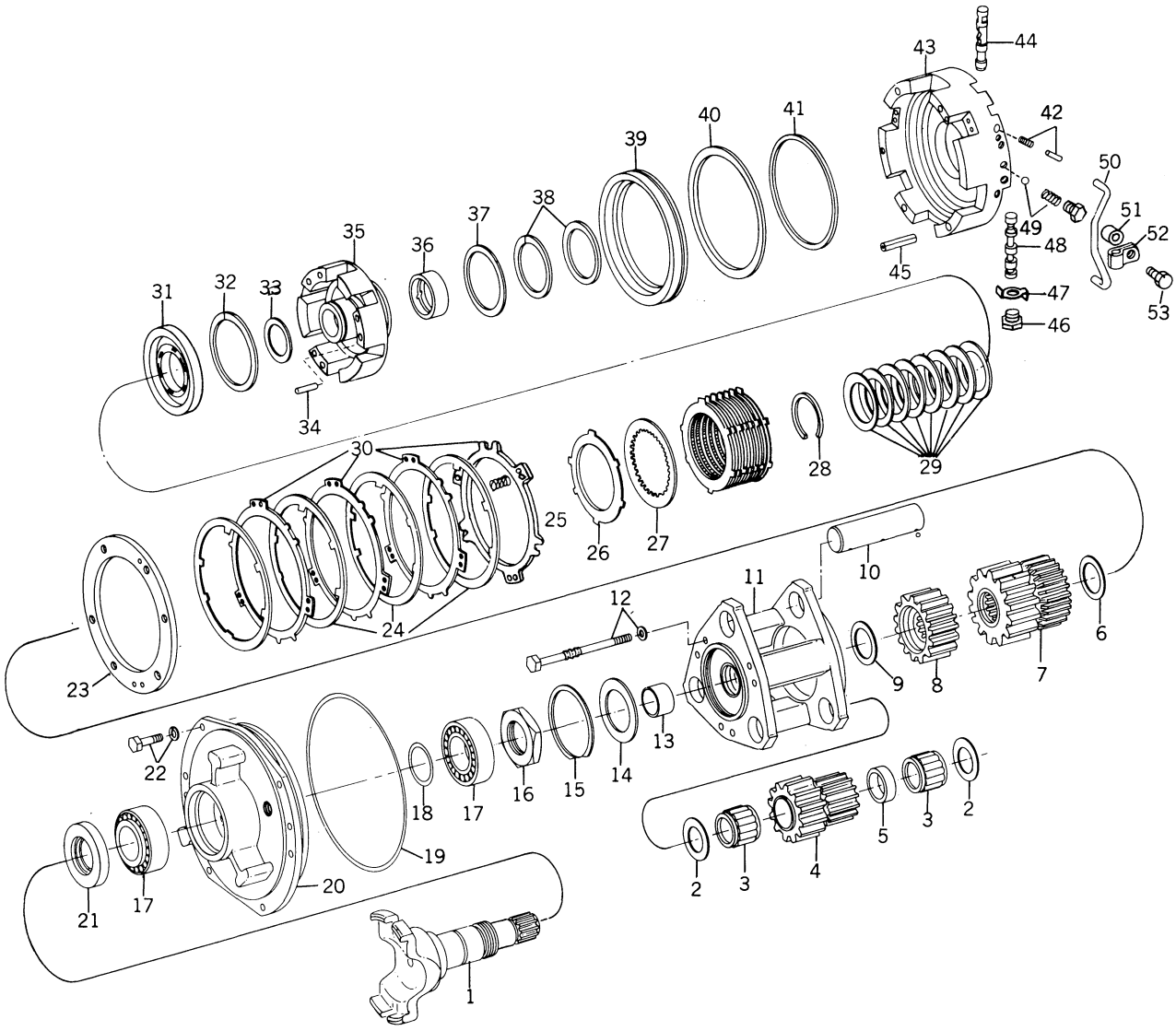

1 —Clutch Output Yoke
2 —Thrust Washer (6 used)
3 —Caged Needle Bearing (6 used)
4 —Planet Pinion (3 used)
5 —Spacer
6 —Thrust Washer
7 —Clutch Hub and Low Sun Pinion
8 —High Sun Pinion
9 —Thrust Washer
10 —Planet Pinion Shaft
10A—Retaining Ball
11 —Planet Pinion Carrier
12 —Carrier Cap Screw with Washer (6 used)
13 —Bushing
14—Thrust Washer
15—Snap Ring
16—Special Nut
17—Tapered Roller Bearing
18—Spacer
19—Rubber Packing
20—Rear Bearing Quill
21—Oil Seal
22—Cap Screw and Washer
23—Backing Plate
24—High Brake Disks
25—Return Spring
26—Separator Plate (8 used)
27—Low Clutch Disk (7 used)
28—Snap Ring
29—Spring Washers
30—Separator Plates (4 used)
31—Low Clutch Piston
32—Outer Packing
33—Inner Packing
34—Dowel Pin
35—Low Clutch Drum
36—Bushing
37—Thrust Washer
38—Sealing Rings
39—High Brake Piston
40—Outer Packing
41—Inner Packing
42—Control Valve Spring and Detent
43—High Brake Housing
44—Control Valve
45—Spring Pin Guide
46—Plug
47—Lock Plate
48—Shift Valve
49—Shift Valve Spring and Detent
50—Oil Line
51—Spacer
52—Clamp (early design)
53—Cap Screw

Fig. 11-Two-Speed Planetary Parts

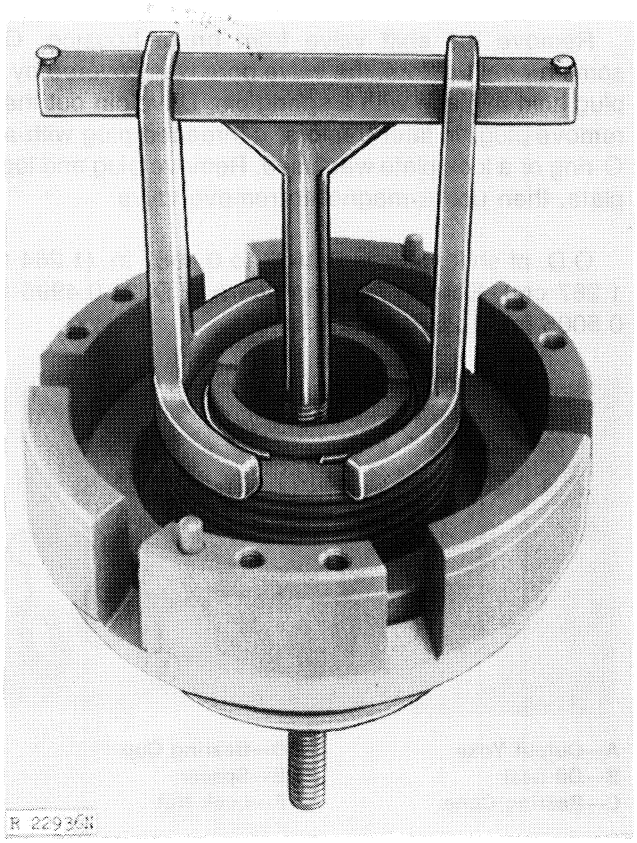

Fig. 12-Removing Snap Ring from Clutch Drum

Use JDT-24 Compression Tool (Fig. 12) to compress clutch drum return washers (29, Fig. 11) and remove snap ring (28) that retains washers.

⚠ CAUTION: Make sure tool is centered over spring pack. After snap ring is removed, release pressure slowly. Always be careful when working with compressed springs to avoid personal injury.

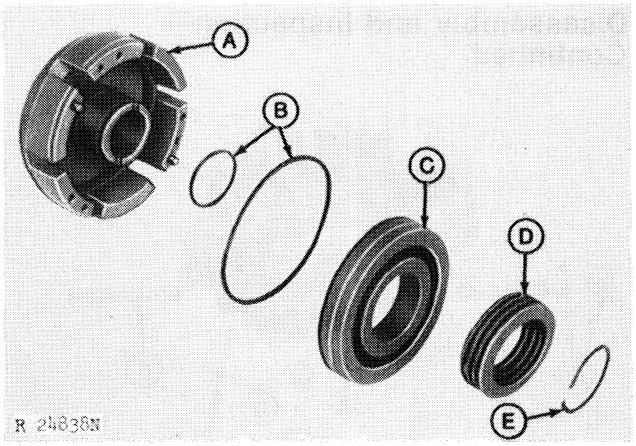

A—Clutch Drum
B—Piston Packings
C—Piston
D—Spring Washers
E—Snap Ring

Fig. 13-Clutch Drum Assembly

Fig. 13 shows the clutch drum parts in their proper relationship after the snap ring has been removed.

Examine piston (C, Fig. 13) and replace packings (B). I.D. of piston is 2.249 to 2.251 in. (5.69 to 5.74 cm). O.D. is 5.225 to 5.235 in. (13.271 to 13.297 cm). Examine sealing rings (38, Fig. 8) on front of drum. Check thrust washer (37). Thrust washer thickness is 0.056 to 0.068 in. (1.422 to 1.727 mm).

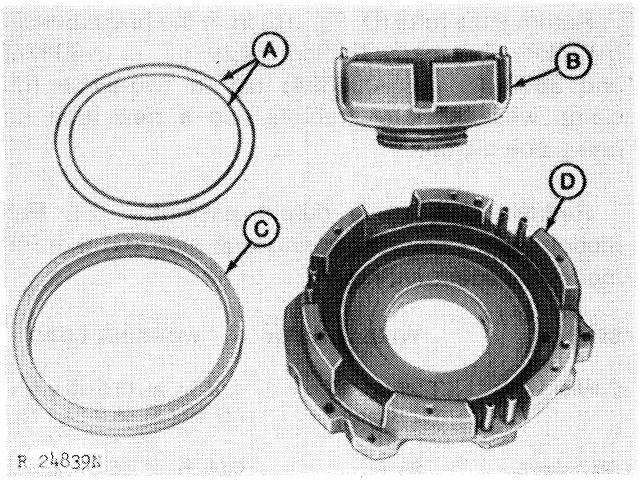

A—Piston Packings
B—Clutch Drum
C—Brake Piston
D—Brake Housing

Fig. 14-Brake Housing and Clutch Drum

Turn brake housing over and tap housing on work bench to remove brake piston. Replace packings (40 and 41, Fig. 11) on piston when unit is re-assembled. I.D. of piston is 6.498 to 6.502 in. (16.46 to 16.56 cm). O.D. is 7.725 to 7.735 in. (19.621 to 19.647 cm).

Disassembly and Inspection—Continued

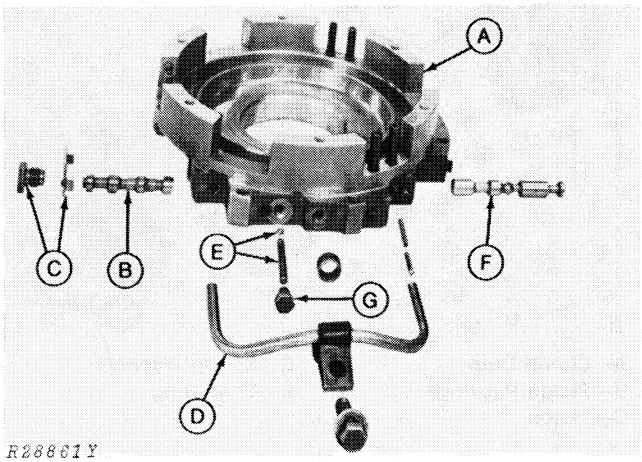

A—Brake Housing
B—Shift Valve
C—Plug and Plate
D—Oil Tube
E—Detent and Spring
F—Control Valve
G—Cap Screw

Fig. 15-Brake Housing With Valves

Turn control valve (F, Fig. 15) so flat side of outer end of valve faces up. Remove valve. Detent still drags on valve so valve may pull hard. Detent and spring will be inside oil tube (D).

Remove the tube (D, Fig. 15) from the brake housing (A). Note that early tractors 8430 (-008748) and 8630 (-006394) use a two-piece tube clamp while all later tractors use a new tube and one-piece clamp.

Remove shift valve detent assembly (E). Early models use a different spring and plug (G) than late models. Inspect springs.

SPRING	FREE LENGTH	WORKING LOAD
Control Valve	1.29 in. (32.8 mm)	1.06 in. at 15.5-18.9 lbs. (27 mm at 68.9-84.1 N)
Shift Valve (Early)	0.98 in. (25 mm)	0.65 in. at 2.5-3.1 lbs. (16.5 mm at 11.1-13.8 N)
Shift Valve (Late)	1.85 in. (47 mm)	0.90 in. at 1.67-2.03 lbs. (23 mm at 7.4-9.1 N)

NOTE: Early Tractors include 8430 (-4851) and 8630 (6948).

Inspect control valve. O.D. of valve is 0.4977 to 0.4987 in. (12.641-12.667 mm).

Remove the shift valve from brake housing. On some model tractors, the valve bore was covered by a plug held in place with a spring pin. Drive pin out then remove plug. In later tractors, a threaded plug with an O-ring or a lock plate was used. Remove plug and lock plate, then use a magnet to remove valve.

O.D. of shift valve is 0.4977 to 0.4987 in. (1.264 to 1.267 cm). Bore in housing has an I.D. of 0.4995 to 0.5005 in. (1.269 to 1.271 cm).

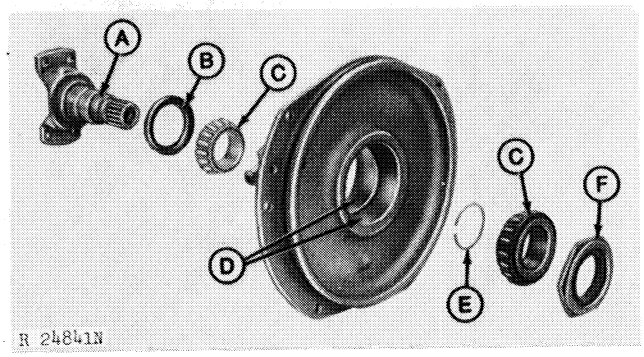

A—Output Yoke
B—Oil Seal
C—Bearing Cone
D—Bearing Cup
E—Spacer
F—Lock Nut

Fig. 16-Output Yoke Bearing Quill

The output yoke rear bearing quill parts in their proper relationship are shown in Fig. 16. Remove lock nut (F) to disassemble unit. On later models* the lock nut will have a LEFT-HAND thread.

The two tapered roller bearings (C) along with the spacer (E) are a matched assembly and must be replaced as a set. The spacing relationship between the quill bore and the bearing is controlled closely.

The I.D. of the bearings is 2.0017 to 2.0023 in. (5.0843 to 5.0859 cm). O.D. of the bearing cup is 3.6718 to 3.6728 in. (9.3263 to 9.3289 cm). I.D. of cup bore in quill is 3.6698 to 3.6708 in. (9.321 to 9.324 cm).

Check the output yoke shaft (A) surfaces. O.D. at the oil seal is 2.6250 to 2.6280 in. (6.6709 to 6.6717 cm). O.D. at bearing surfaces is 1.9994 to 2.0000 in. (5.0784 to 5.0800 cm).

*8430 (2026-)
8630 (2751-)

Litho in U.S.A.

Assembly

When reassembling the two-speed planetary, dip or coat friction parts with Hy-Gard Oil or its equivalent. This will ease installation of parts and will protect unit when tractor is operated until clutch oil pump can provide lubricating oil to the unit.

Fig. 17-Installing Brake Piston

Install new rubber packings on brake piston and install piston in brake housing (Fig. 17) using JDT-23-1 and JDT-23-2 Tools.

Insert shift valve (B, Fig. 15) in brake housing and install round plug and spring pin (some models) or threaded plug with O-ring or lock plate in shift valve bore. Tighten plug securely.

Place detent ball and spring (E) for shift valve into cap screw bore. On later models install capscrew (G, Fig. 15). Tighten to 23 ft-lbs (31 Nm) torque. Place detent pin and spring (E, Fig. 15) for control valve into opening and install control valve. Rotate control valve so that side of valve faces the housing diameter.

Place oil line (D) in brake housing with bend of oil line pointing up. Position spacer and oil line clamp in place and install cap screw with washers into cap screw bore. Tighten cap screw to 23 ft-lbs (31 Nm) torque.

Install new packings on clutch piston and install piston in clutch drum. Reassemble clutch piston return spring washers with convex sides alternately facing upward, then downward, and convex side of first spring facing piston. Use compression tool JDT-24 as shown in Figure 12 to press springs below snap ring groove and install snap ring.

Install sealing rings (38, Fig. 11) on front of clutch drum and position clutch drum in brake housing. BE SURE to install the thrust washer (37) between the clutch drum and brake housing.

When installing clutch plates and disks in drum, it is easier to install them on clutch hub and then install hub in drum.

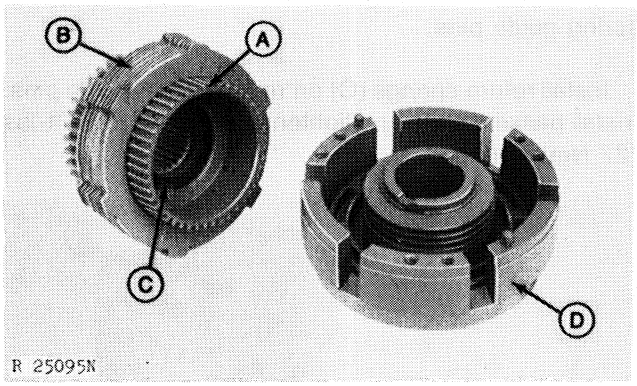

A—Clutch Hub **C—Thrust Washer**
B—Disks and Plates **D—Clutch Drum**

Fig. 18-Disks And Plates Installed On Hub

Invert clutch hub (A, Fig. 18) and install plates and disks (B) alternately on hub. A separator plate should be on top and bottom. Then, while holding the hub with plates and disks, install in clutch drum (D) with tangs of separator plates inserted in slots in clutch drum. BE SURE the thrust washer (C) is installed between the clutch hub and the clutch drum.

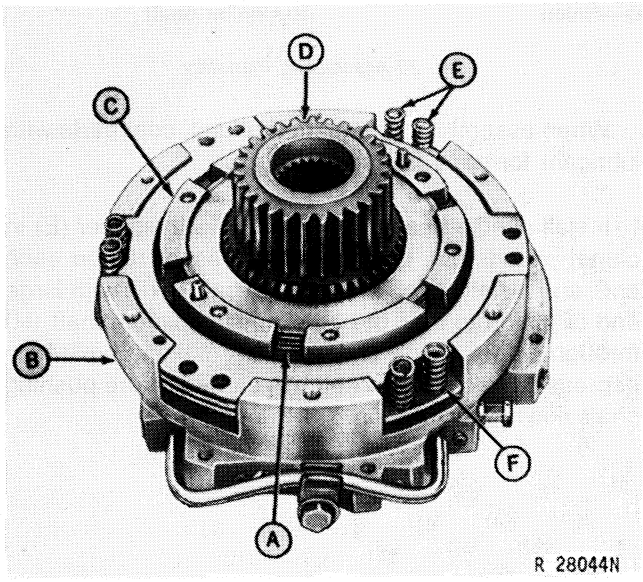

A—Clutch Plates **C—Clutch Drum** **E—Brake Return Springs**
B—Brake Plates **D—Input Sun** **F—Separator Plate**

Fig. 19-Clutch and Brake Assembly

Assembly—Continued

When assembling brake pack, assemble first separator plate next to brake piston with tangs installed in slot over return spring guide pins (See Fig. 19). Next, install a brake disk with inner tang inserted in slot in clutch drum. Alternately install remaining separator plates (B) and disks with tangs of plate positioned in slots in brake housing that do not have the return spring guide pins.

Install return springs (C) on return spring guide pins. Install backing plate and tighten cap screws to 20 ft-lbs (27 Nm) torque.

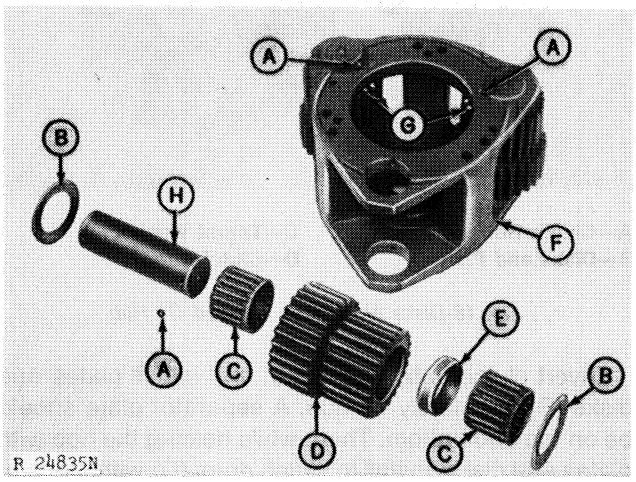

A—Ball
B—Thrust Washer
C—Bearings
D—Pinion
E—Spacer
F—Carrier
G—Timing Marks
H—Pinion Shaft

Fig. 20-Assembling Planetary

When assembling the planetary unit, coat parts with lubricant for ease in assembling.

Install needle bearing (C, Fig. 20) with spacer (E) in planet pinions (D), place a thrust washer (B) on each end, and install pinion in planetary carrier (F) with large end of pinion to rear of carrier. Install pinion shaft (H) through planet pinion and position retaining ball (A) in depression in shaft and notch in carrier before pushing shaft down into position.

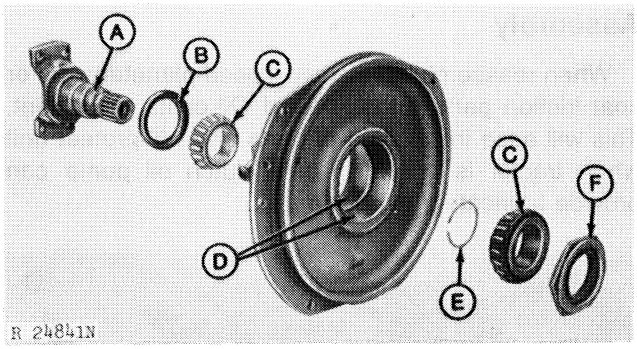

A—Output Yoke
B—Oil Seal
C—Bearing Cone
D—Bearing Cup
E—Spacer
F—Lock Nut

Fig. 21-Output Yoke Bearing Quill

When assembling output yoke bearing quill assembly, drive the clutch output yoke bearing quill front and rear bearing cups (D, Fig. 21) into quill until cups bottom. Place rear bearing cone (C) in quill and drive yoke oil seal (B) into bore until it is flush to 0.02 in. (0.5 mm) below top of bore.

Position yoke (A, Fig. 21) in vise with splined end of shaft up. Install bearing quill over shaft. Install spacer (E) on shaft against bearing cone. Install remaining bearing cone.

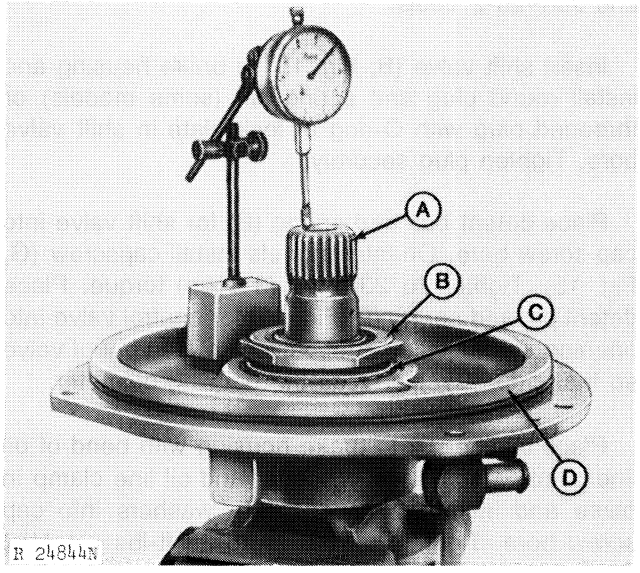

A—Output Yoke Shaft
B—Lock Nut
C—Bearing Cone
D—Bearing Quill

Fig. 22-Checking Output Yoke End Play

Install lock nut (B, Fig. 22) on shaft (A) and tighten to 200 ft-lbs (271 Nm) torque using JDT-29 Locknut Tool. (See page 50-40-12 for information for using tool with torque wrench.)

NOTE: When using JDT-29 Wrench with a 35 to 45 in. (889-1143 mm) long torque wrench, set the torque wrench at 184 ft-lbs (250 Nm) (25 kgm) to obtain the proper torque specification. Torque wrench length is distance from center of handle to the center of the wrench drive. Be sure to keep the torque wrench parallel with the JDT-29 Wrench.

If the torque wrench is not 35 to 45 in. (889-1143 mm) long, use the formula given in Group 40 to derive the proper torque wrench setting when using the JDT-29 Wrench.

The output yoke bearing quill assembly must NOT have any preload. Check to assure end play exists in the shaft. Grasp bearing quill by outer rim and rotate while pulling upward on quill. Set a dial indicator (as shown in Fig. 22) on end of shaft. Grasp quill by outer rim and rotate slightly while pressing down on quill.

The end play on the shaft should be 0.001 to 0.007 inch (0.025 to 0.178 mm). If the measurement does not come within specification, the bearing cone, bearing cup, and spacer assembly or the bearing quill will have to be replaced.

After adjustment is completed, stake nut in two places.

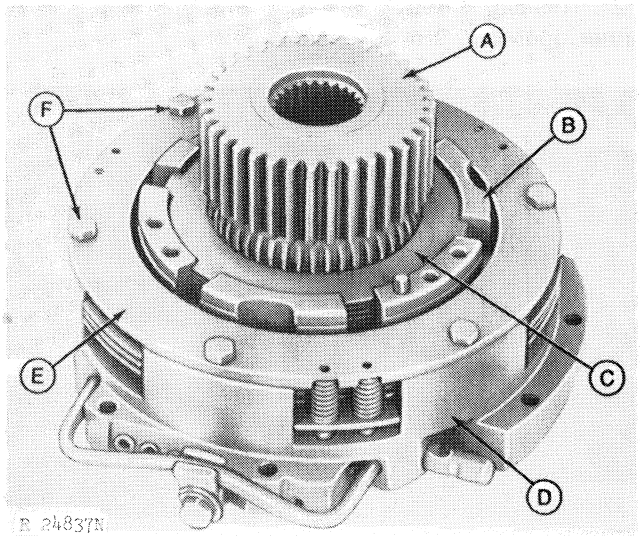

A—Clutch Hub
B—Clutch Drum
C—Clutch Plates and Disks
D—Brake Housing
E—Backing Plate
F—Cap Screws

Fig. 23-Brake Assembly

Install brake backing plate (E, Fig. 23) and torque backing plate-to-brake housing cap screws (F) to 21 ft-lbs (28 Nm) (2.8 kgm).

IMPORTANT: Planetary unit must be timed carefully to prevent early failure of the assembly.

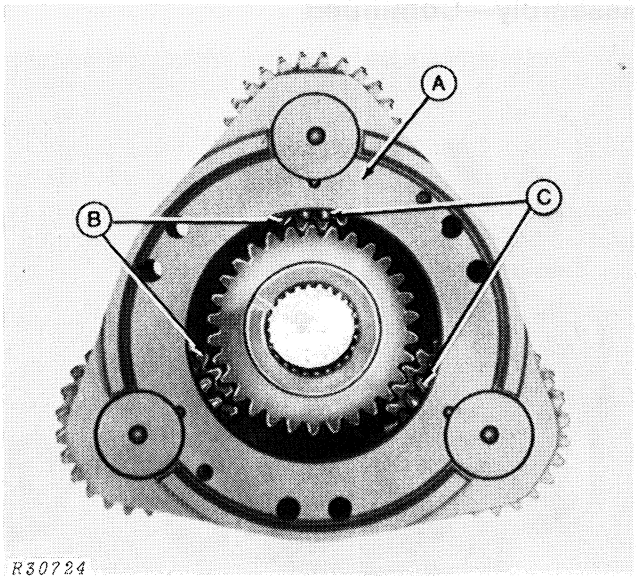

A—Carrier
B—Planet Pinion
C—Timing Marks

Fig. 24-Timing Planetary

The planetary planet pinions (B, Fig. 24) have timing marks (C) on two of the smaller gear's teeth (11). When installing the sun pinion, position the gap between the marks to point toward the center of the carrier (centered over retaining balls). Place the thrust washer between the pinion and the carrier. Install sun pinion. Check timing after installing sun pinion.

NOTE: Later planetary carriers may have a "V" mark on the outer face of the carrier adjacent to each pinion shaft bore. If the carrier has these marks, position each planet pinion so the marks on the pinion (//) are centered over the "V" mark. Install sun pinion and recheck timing.

Coat the ends of the planet pinion shafts and carrier with heavy grease to prevent the shafts from falling from carrier during installation.

While holding the rear sun pinion against the carrier, install the carrier assembly on the clutch and brake assembly. Be sure dowel pins and screw holes on clutch drum are aligned with holes in carrier.

Lubricate the six long rubber-sleeved planetary-to-clutch drum cap screw threads and rubber shanks and install in carrier. Torque the cap screws to 20.7 to 25.3 ft-lbs (28.0-34.3 Nm) (2.80-3.43 kgm).

Assembly—Continued

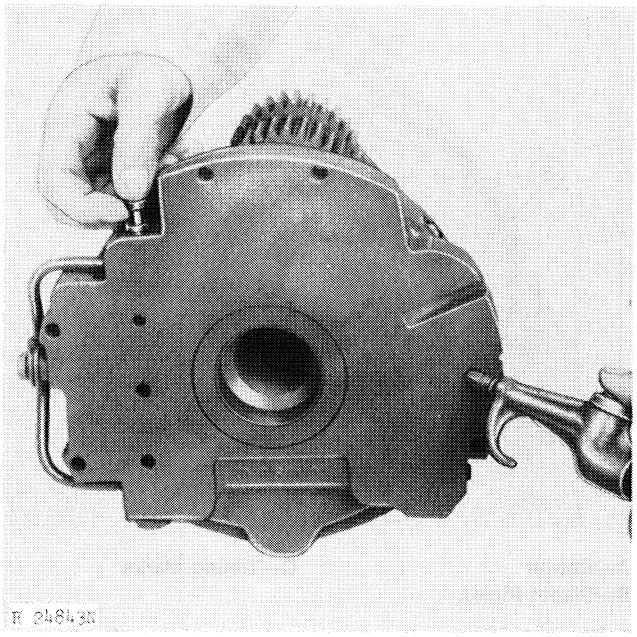

Fig. 25-Air Checking Two-Speed Planetary

Push the control valve (Fig. 25) in. Apply 50 psi (345 kPa) (minimum) air pressure at the system oil passage. The brake should engage. As air pressure is taken away the disks and plates should be released.

Move the control valve out and apply air pressure at the clutch port. The movement of the shift valve should be apparent.

Pressurize the system pressure port with the shift valve in the clutch engaged position. The piston should be heard as the low clutch disks are compressed.

If either the clutch or brake does not respond properly, inspect the assembly of the pack or valves as required.

Installation

1. Install clutch drive shaft through rear of operating piston housing so front of shaft pilots in the crankshaft pilot bushing. Be sure the lube bushing in the rear of the shaft is clear and has spring tension.

2. Install piston housing-to-brake housing passage packing with grease to prevent it from falling from piston housing sleeve.

3. Install the planetary installation tool in the planetary and attach the small chain to the carrier.

IMPORTANT: If planetary and brake housing are installed separately, clutch rear separator plate is free to move out of place. If the plate falls off the hub during planetary installation, the carrier can be improperly attached causing excessive wear on the clutch and damage to the planetary bushings.

If the planetary is installed separately, be sure parts remain in position using wire. Remove the wire and check the surface between the clutch drum using a small mirror.

4. Pull the planetary control valve out to the overdrive detent and shift the speed selector lever to speed "2". This aligns the control valve and the control valve inner operating arm for installation.

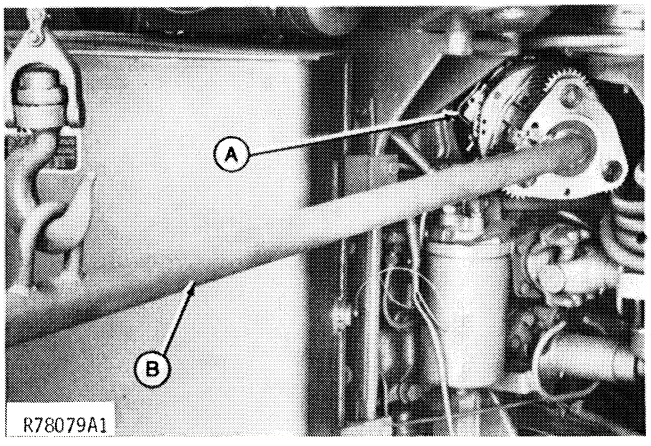

A—Shift Valve Oil Tube **B—Planetary Installation Tool**

Fig. 26-Installing Planetary Assembly

5. Using an overhead hoist, balance the tool with the planetary assembly and guide it into the clutch housing. As the planetary enters the quill opening in the front hinge, rotate the handle of the tool toward the fuel tank.

6. If the shift valve oil tube (A, Fig. 26) is not in the approximate position shown, rest the weight of the planetary on the hinge and rotate the brake housing as shown.

⚠ CAUTION: Be sure planetary is resting securely. Have another person hold the tool (B) from moving. If outer end of tool moves even slightly, the resulting motion of the planetary assembly and tool could cause severe pinching and crushing injury to the person in the hinge area of the tractor.

IMPORTANT: As the planetary assembly is installed, use care not to damage any of the external oil lines or fittings. Use the tool shown in Fig. 26. Instructions to make the tool are given in Group 40.

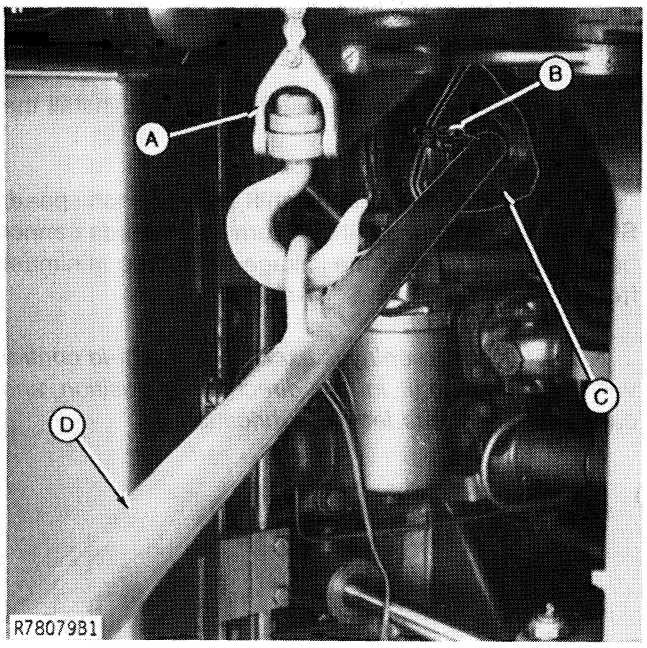

A—Chain Hoist
B—Attaching Chain
C—Planetary Assembly
D—Removal Tool

Fig. 27-Planetary Assembly Installed

7. While rotating the tool (D, Fig. 27) and planetary (C) away from the fuel tank, move the tool and planetary straight forward.

8. With the planetary resting on the clutch drive shaft, remove the attaching chain (B) from the carrier and remove the tool.

9. Rotate the brake housing so the control valve is engaged with the inner shift arm.

10. Use a 1/4 inch Allen wrench socket adapter to torque the five special socket-head cap screws to 21 ft-lbs (28 Nm) (2.8 kgm).

NOTE: Be sure socket adapter fits tightly on extension. If a socket is not available, use a length of 1/4 in. hex bar stock. The hex shaft must be a minimum of 5 in. (125 mm) long to prevent dropping in the clutch housing.

11. Check to be sure the planetary rear thrust washer and snap ring are installed in the rear of the carrier before installing output yoke bearing quill.

12. Coat the yoke bearing quill O-ring with oil and install the quill in the clutch housing.

13. Torque the yoke quill-to-hinge cap screws to 35 ft-lbs (47 Nm) (4.7 kgm). Tighten the cap screws evenly to prevent damage to the O-ring.

14. Connect all electrical wires and hydraulic lines.

15. Install upper U-joint guard and shaft.

IMPORTANT: The shaft slip joint is a balanced assembly. Be sure the U-joint halves are "in time" by aligning the arrows that are stamped on the shafts.

16. Torque 8430 U-joint cap screws to 70 ft-lbs (95 Nm) (9.5 kgm). Torque 8630 cap screws to 85 ft-lbs (115 Nm) (11.5 kgm).

17. Test the hydraulic system for proper operation (See Section 70).

Adjustment

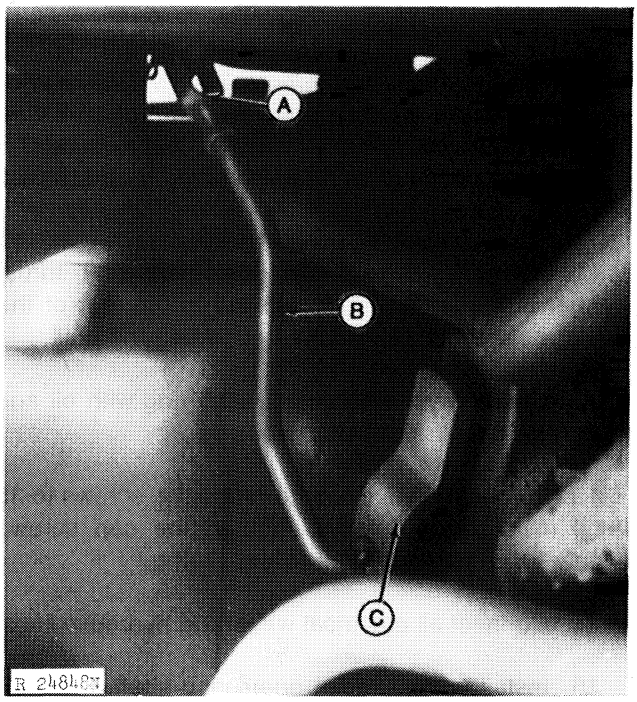

A—Adjusting Yoke **C—Control Arm**
B—Shifter Rod

Fig. 28-Adjusting Two-Speed Shift Linkage

IMPORTANT: The hi-lo shifter shaft and arm are secured with a spring pin. The control valve inner arm must point rearward and the outer arm must be approximately at the 7 o'clock position.

On early tractors 8430 (-3594) and 8630 (-4935), a set screw and jam nut were used to retain the shifter shaft. Adjust the set screw to contact the shifter shaft, back off the set screw one turn and tighten the jam nut.

NOTE: The two-speed planetary control linkage rod yoke can be adjusted from the rear of the Sound-Gard Body, but is most easily adjusted by removing the Sound-Gard Body floor plate. Refer to Section 80, Group 5 for instructions on removing the floor plate.

1. Disconnect the two-speed planetary control shifter yoke (A, Fig. 27) on the lower shifter rod (B).

2. Place the speed change shift lever in the control console in the "1" position against the lever guide plate.

3. Place the control arm (C) at the clutch housing in the forward position, then move it rearward one detent.

4. Adjust the rod yoke until the pin can be installed in the lower bellcrank hole, then turn the yoke one turn to shorten the rod (B).

5. Lock the jam nut against the yoke and install the cotter pin in the yoke pin.

6. Shift the speed change shift lever to each speed. Shorten the rod one additional turn if all speeds cannot be obtained. Readjust the linkage to provide minimum freeplay on the "1" and "3" shift side.

NOTE: If this freeplay is excessive, the hi-lo control valve with overshift in the direct drive position and cause a continuous leak of lubrication oil.

Group 15
INDEPENDENT PTO

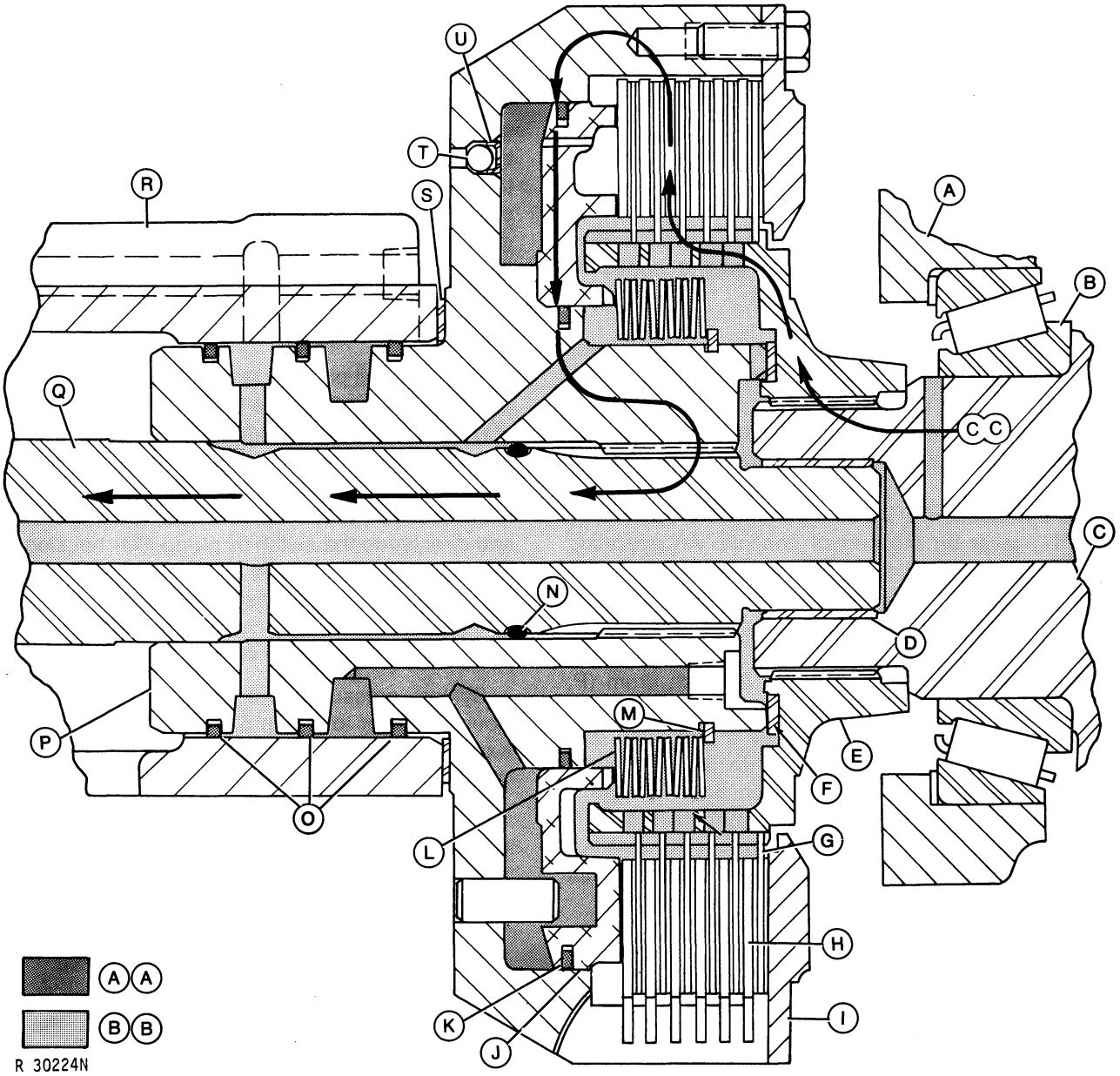

A—Front Bearing Quill
B—Roller Bearing
C—PTO Drive Gear
D—Bushing
E—PTO Clutch Hub
F—Thrust Washer
G—PTO Clutch Disk (6 used)
H—Separator Plate (6 used)
I —Backing Plate
J —Clutch Piston
K—Piston Packing
L —Return Washers (11 used)
M—Snap Ring
N—O-Ring
O—Sealing Rings
P—PTO Clutch Drum
Q —PTO Output Yoke
R —PTO Bearing Quill
S —Thrust Washer
T —Ball
U —Retainer
AA—Pressure Oil
BB—Lube Oil
CC—Power Flow

Fig. 1-Independent PTO Clutch Engaged

GENERAL INFORMATION

The Independent PTO is available as an option on the 8430 and 8630 tractors.

The Independent PTO is a hydraulic actuated clutch unit located at the bottom of the clutch housing immediately beneath the two-speed planetary. Hydraulic engaging oil is provided by the clutch oil pump and is directed to the PTO clutch unit by the PTO clutch valve. The clutch valve housing is attached to the inside of the pressure regulating valve housing which is attached to the left side of the clutch housing.

The Independent PTO clutch output power shaft is operated at 1000 rpm when the engine speed is 2100 rpm.

The PTO brake is located in the rear of the rear hinge (P, Fig. 2). An aluminum annular piston with a facing bonded on one side applies pressure to a flat face on the PTO drive pinion gear to stop PTO power shaft rotation when the PTO brake is applied.

The Independent PTO engagement is controlled by the PTO lever on the control console. An operating rod from the lever to the PTO clutch valve operating arm engages the clutch when the PTO lever is moved to the engaged position.

The PTO clutch unit consists of a clutch drum (P, Fig. 1) having an aluminum annular piston (J), a spring washer pack (L) retained by a snap ring (M), six separator plates (H) tanged to the drum, six clutch disks (G) splined to a clutch hub (E), and a backing plate (I). The hub is splined to the PTO clutch drive gear (C). The plates and disks are alternately installed in the clutch drum with one separator plate being placed next to the engaging piston.

Power Flow

Power to the PTO clutch is provided by the transmission clutch cover which is attached to the flywheel. Hence, the PTO gear train supplies power for the Independent PTO clutch whenever the engine is running.

The PTO clutch shaft is splined to the clutch cover. The clutch oil pump drive gear (PTO drive gear) is splined to the clutch shaft. An idler gear receives power from the clutch pump drive gear and transfers it to the PTO clutch drive gear.

In the disengaged position, the PTO clutch drive gear which is splined to the PTO clutch hub rotates the hub and clutch disks. Since there is no pressure oil to the clutch, the plates and disks are not compressed into a solid unit and rotation stops at that point.

In the engaged position (Fig. 1), pressure oil to the PTO clutch compresses the disks and plates into a solid unit. The power flows from the PTO clutch drive gear to the clutch hub, then through the disk and brake pack to the drum. Since the plates are tanged to the clutch drum, the power flows through the clutch drum to the output yoke and to the U-joint and gear train in the Torque Divider. Power flows through the gear train in the Torque Divider to rotate the PTO powershaft.

Oil Flow

The clutch oil pump is located forward of the oil filter housing which is attached to the rear of the front hinge (Fig. 2). The gear that supplies power for the clutch oil pump drive gear also supplies power to the PTO clutch drive gear (C, Fig. 1). Oil is picked up from the transmission case (torque divider housing on late models) and directed to the clutch oil pump filter housing. After filtering, the oil is routed to the pressure regulating valve housing. The pressure regulating valve is adjusted to maintain 175 ± 10 psi (1207 ± 69 kPa) pressure oil to the PTO clutch valve.

System pressure oil is routed to the clutch valve housing. Refer to Group 5, Perma-Clutch, page 6, for explanation of the operation of the PTO clutch valve and lock piston.

When the PTO is engaged, pressure oil from the clutch valve is directed through the clutch oil pump housing and filter housing to the PTO bearing quill attached to the rear of the front hinge. A passage in the bearing quill routes pressure oil to an area between two sealing rings and which is connected to the cavity behind the clutch piston.

Pressure oil behind the piston forces the plates and disks into a solid unit causing the output yoke and the drive gear to rotate together.

When the PTO brake is applied, oil is shut off to the clutch pack and the oil that was used for engagement is dumped into the clutch housing. The clutch valve now routes pressure oil to the PTO brake, moving the PTO brake piston against the PTO shaft pinion to stop rotation of the shaft.

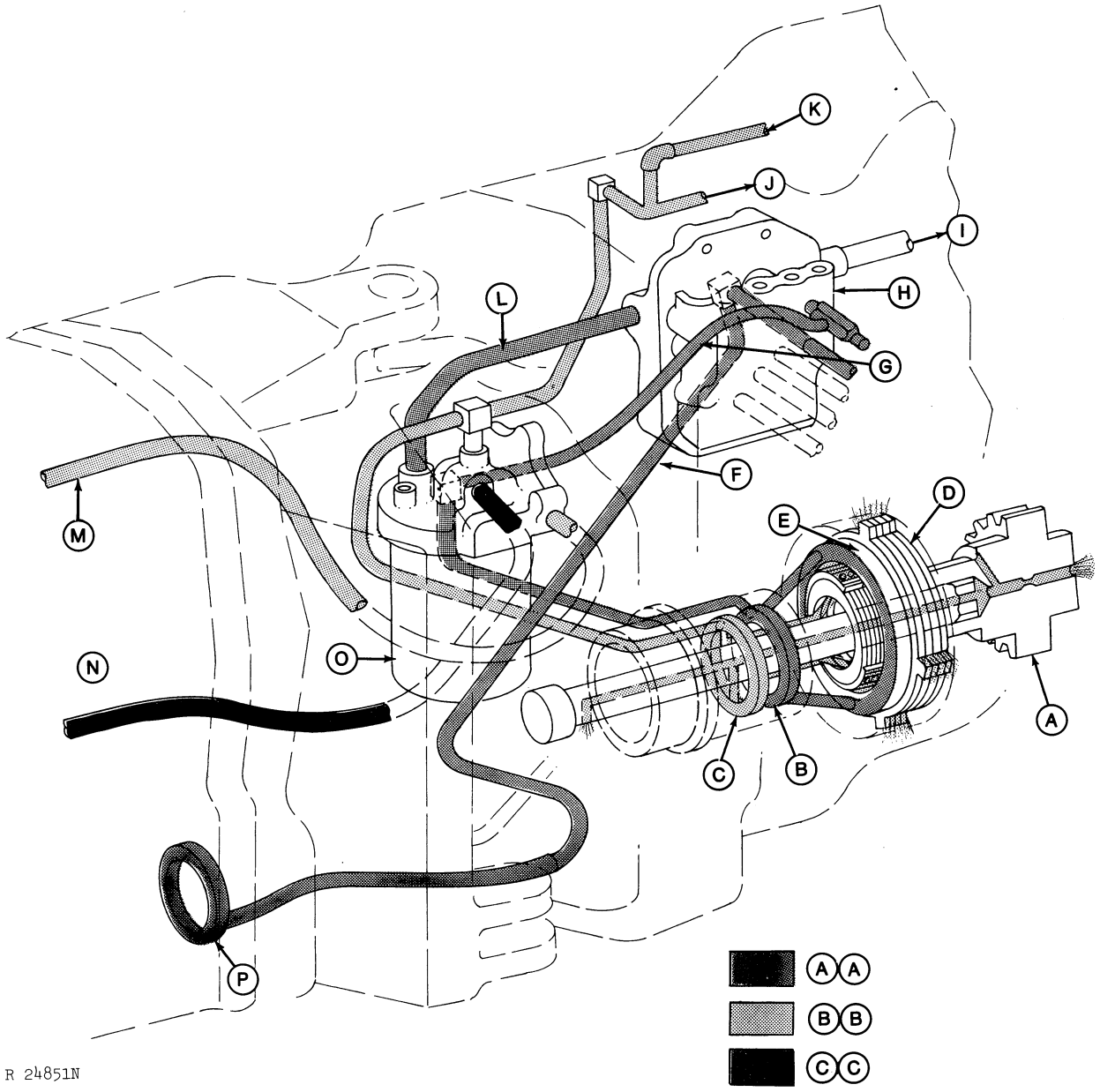

A—PTO Drive Gear
B—PTO Pressure Oil Passage
C—Lube Oil Passage
D—PTO Disks and Plates
E—PTO Piston
F—PTO Brake Pressure Passage
G—PTO Clutch Pressure Passage
H—Clutch Valve Housing
I —Passage to Main Hydraulic Pump
J —Passage to Operating Piston Housing
K—Return Oil Passage From Cooler
L —Clutch Oil Pressure Passage
M —Passage To Reservoir
N —Passage From Reservoir
O —Oil Filter Housing
P —PTO Brake Piston
AA—Clutch Oil Pressure
BB—Lube Oil Pressure
CC—Return Oil Pressure

Fig. 2-Independent PTO Oil Flow

Oil for cooling and lubrication returns from the oil cooler to the top of the clutch housing. A passage in the clutch housing routes the oil to an external line connected to a fitting on the clutch oil filter relief valve housing. Routing of oil is then to the PTO rear bearing quill where a passage directs the oil to a passage between two sealing rings at the rear of the PTO clutch drum.

Oil proceeds forward between the output shaft and the clutch drum to the spring washer pack (L, Fig. 1). When the PTO clutch is disengaged, the oil to the disks and plates is cut off by a sealing action of the bottom spring washer against the clutch drum thus preventing drag and causing overheating. Upon engagement, the pressure oil compresses the spring washer pack allowing lube oil to escape through notches in the piston and to flow to the clutch hub, through holes in the hub and out to the disks.

Lubrication oil also enters a drilled passage in the output yoke directing oil to the center of the output yoke forward to the PTO clutch drive gear bushing and bearing. Oil also flows rearward to the PTO output yoke bearing.

DIAGNOSING MALFUNCTIONS

PTO Lacks Power Or Fails To Operate

Worn, glazed, or defective clutch disks
PTO clutch valve stuck
Low system pressure
O-rings on adapter missing or leaking excessively
PTO operating lever out of adjustment
Clutch pack leaking excessively
Sealing ring missing or broken

Noisy PTO Engagement

Excessive gear train backlash
Failed bearings

Noisy PTO Operation

Failed bearings
Clutch disks defective or broken
Gear train failure
Low oil pressure
PTO clutch yoke worn at spline to clutch cover

PTO Will Not Stop

Low system pressure
PTO brake piston facing damaged or worn excessively
O-rings missing or leaking on PTO brake adapter at clutch valve
Incorrect valve rod adjustment
Excessive clutch drag
Seized bushing in PTO clutch drive gear

Low Oil Pressure

Plugged oil filter
Pressure regulating valve not adjusted properly
Clutch oil pump defective
Broken pressure regulating valve spring

TESTING

PTO Clutch

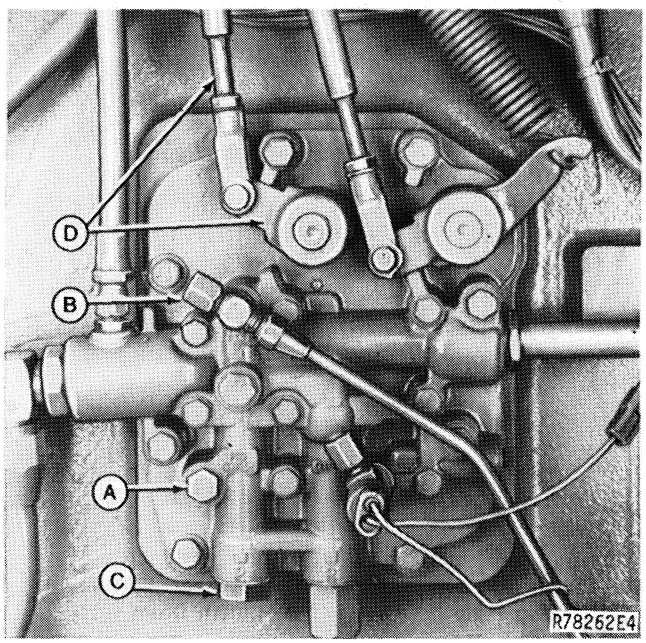

A—PTO Clutch
B—PTO Brake
C—Pressure Regulating Valve
D—Operating Arm and Rod

Fig. 3-PTO Test Points

Install a pressure gauge (0 to 300 psi [0-2067 kPa]) at the PTO clutch test plug (A, Fig. 3). Start engine and engage PTO clutch. At 2000 rpm engine speed, clutch oil pressure should be at system pressure. If oil pressure is lower, do not put the PTO under load until the condition has been corrected.

When the PTO brake is engaged, the PTO clutch pressure should drop immediately to zero. Engage the PTO clutch gradually. The pressure should also increase gradually to approximately 130 psi (897 kPa) and then rapidly rise to system pressure.

PTO Brake

To test PTO brake pressure, remove PTO brake oil line and adapter (early models) or oil line cap and install a pressure gauge (0 to 300 psi [0-2067 kPa]) at the PTO brake test port (B, Fig. 3). Start the engine and pull the PTO control lever back to the brake position. At 2000 engine rpm, brake oil pressure should be at system pressure.

With the engine running at 2000 rpm push the PTO control lever forward into the fully engaged position. PTO brake pressure should drop immediately to zero.

REMOVAL

With tractor in straight position, disconnect and remove the upper and middle telescoping U-joint drive shafts. Remove drive shaft guards.

Start tractor and put in sharp right turn. Shut engine off and remove key.

⚠ CAUTION: Never perform mechanical or diagnostic service around the hinge area while the engine is in operation. Always observe all safety practices when working around a "live" tractor.

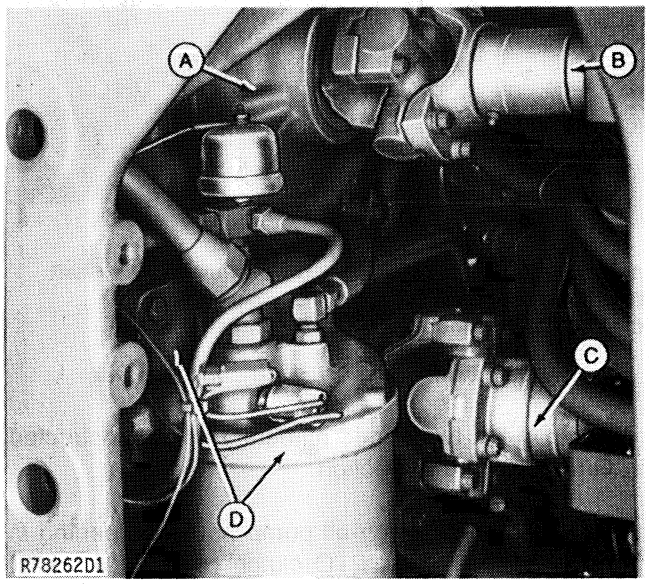

A—Bearing Quill
B—Upper Drive Shaft
C—PTO U-Joint
D—Oil Filter Relief Valve Housing

Fig. 4-Rear of Front Hinge

Disconnect vent hose from clutch output yoke bearing quill.

Remove the clutch oil relief valve housing (C, Fig. 4) and clutch oil pump housing from tractor. (For servicing clutch oil pump, refer to Section 70, Group 15.)

Before the PTO clutch pack can be removed, the two-speed planetary must be removed. Remove the rear two-speed planetary rear bearing quill (B) from front hinge. (Two jack screw holes (A) on opposite sides of bearing quill will assist in removal.)

Remove PTO bearing quill from hinge, the quill is attached with four cap screws.

REMOVAL—Continued

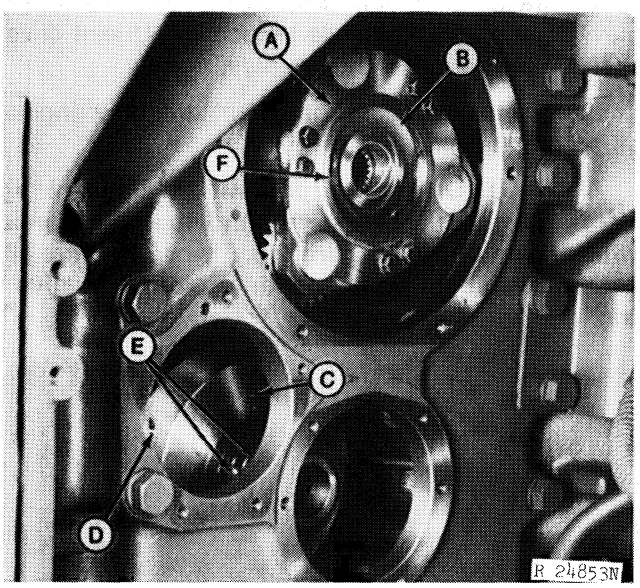

A—Planetary
B—Snap Ring
C—PTO Clutch Housing
D—Oil Pump Drive Shaft
E—Sealing Rings
F—Thrust Washer

Fig. 5-Front Hinge With Bearing Quills Removed

Remove the two-speed planetary unit as instructed in Group 10 of this Section.

Reach through clutch oil pump housing opening in front hinge to support PTO clutch pack. Grasp PTO clutch unit with other hand and pull rearward to disconnect clutch hub from PTO clutch drive gear. Lift clutch pack up and remove through the two-speed planetary opening.

REPAIR

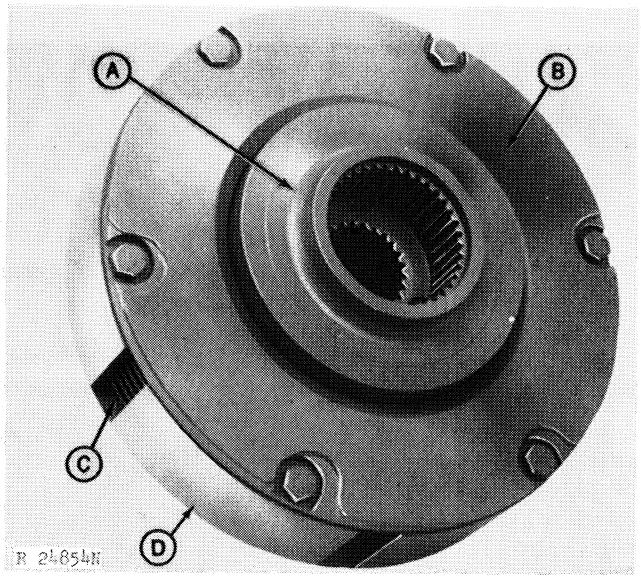

A—Clutch Hub
B—Backing Plate
C—Separator Plates
D—Clutch Drum

Fig. 6-Independent PTO Clutch Pack

Place clutch pack on work bench and remove the six cap screws that attach the backing plate (B, Fig. 6) to the drum (D). The clutch disks and plates will be exposed.

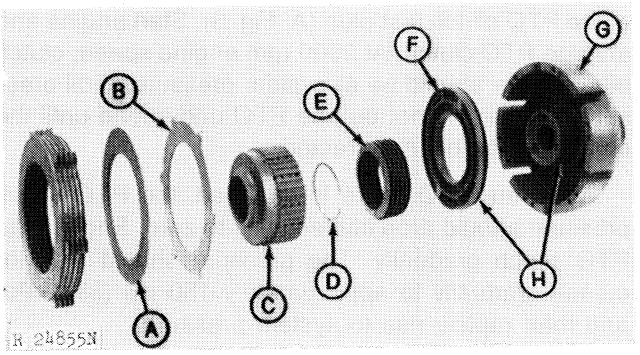

A—Clutch Disk
B—Separator Plate
C—Clutch Hub
D—Snap Ring
E—Spring Washers (11 used)
F—Piston
G—Drum
H—Packings

Fig. 7-PTO Clutch Pack Parts

There are six separator plates (B, Fig. 7) in the clutch assembly. Notice that each plate has a notch in one of the tangs. This identifies a "wavy" plate as opposed to a flat plate which is used in the two-speed planetary pack. There will be worn spots on the plate where the high part of the plate makes contact first.

Check each plate for cracks or scoring. Plate thickness is 0.088 to 0.092 in. (2.24 to 2.34 mm). Wavy pattern of plate could be disturbed if clutch pack has been subjected to severe temperature.

There are six clutch disks (A, Fig. 7) alternated with the plates. New disk thickness is 0.127 to 0.133 in. (3.22 to 3.38 mm). If disk thickness is 0.110 in. (2.79 mm) or less, or if groove depth on any disk is 0.002 in. (0.051 mm) or less, replace the disk.

Examine disk for glazing if clutch has been operating at high temperature. Hold disk so that light is reflected off disk surface. Surface should not be glossy or shiny. If glazing exists, replace disk.

Check clutch hub (C) for cracks or unusual wear. Also, inspect thrust washer between clutch hub and drum. New washer thickness is 0.068 in. (1.73 mm). Check mating surfacing of thrust washer. Smooth surface with fine grade of emery cloth or hone if burred.

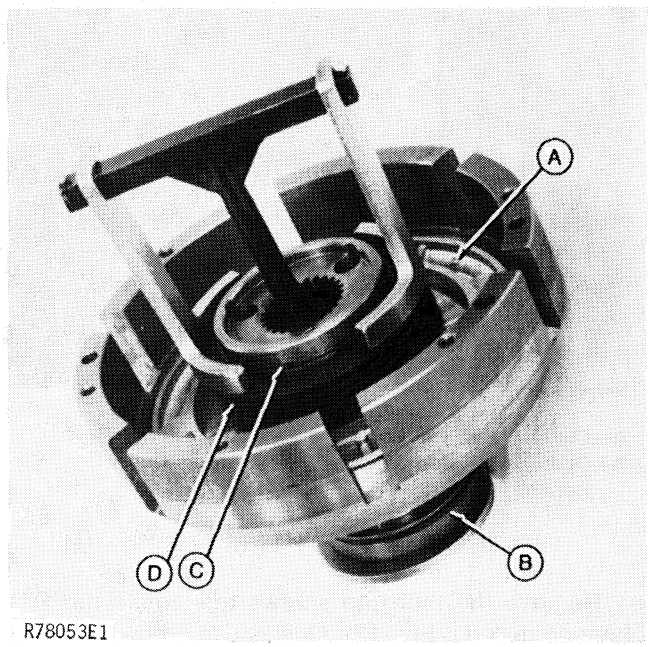

A—Clutch Piston **C—Snap Ring**
B—Sealing Ring **D—Spring Washers**

Fig. 8-Removing Spring Washers

Use the JDT-24 Spring Washer Compression Tool and remove snap ring (C, Fig. 8) holding spring washers (D) in place.

Remove the clutch piston (A) from the clutch drum. I.D. of piston is 3.974 to 3.978 inch (100.95 to 101.05 mm). O.D. is 7.377 to 7.387 inch (187.37 to 187.63 mm).

Replace the rubber packing (H, Fig. 7) on the O.D. of piston and the I.D. of drum.

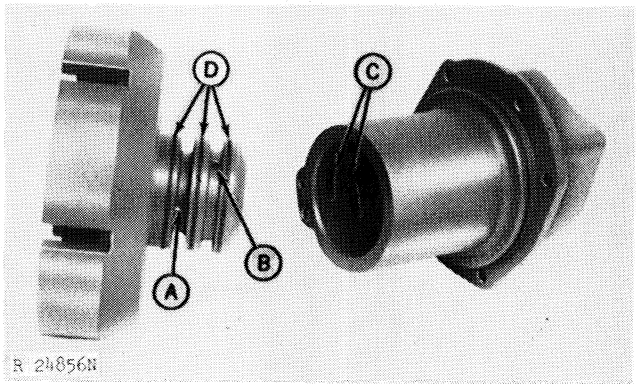

A—Pressure Passage **C—Oil Inlet**
B—Lube Passage **D—Sealing Rings**

Fig. 9-Oil Passages For PTO Clutch

Check sealing rings (D, Fig. 9) on rear of clutch drum. Check oil passages (A, B, and C) for possible obstructions.

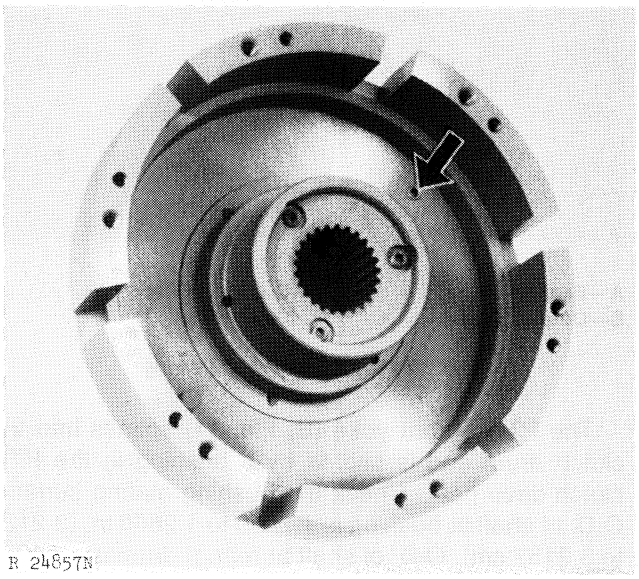

Fig. 10-PTO Clutch Bleed Mechanism

The clutch drum (Fig. 10) has a small bleed mechanism (T and U, Fig. 1) which speeds disposition of pressure oil to sump when pressure is relieved.

When pressure oil enters the area behind the piston, the ball is pushed on its seat. As pressure is relieved, the pressure oil leaks out a small orifice in the clutch piston. As pressure oil diminishes, centrifugal force moves the ball off its seat.

Check the bleed mechanism with air pressure to see that it is functioning properly. If parts are replaced; install ball, then retaining plug (with cupped end of plug facing drum.

Litho in U.S.A.

REPAIR—Continued

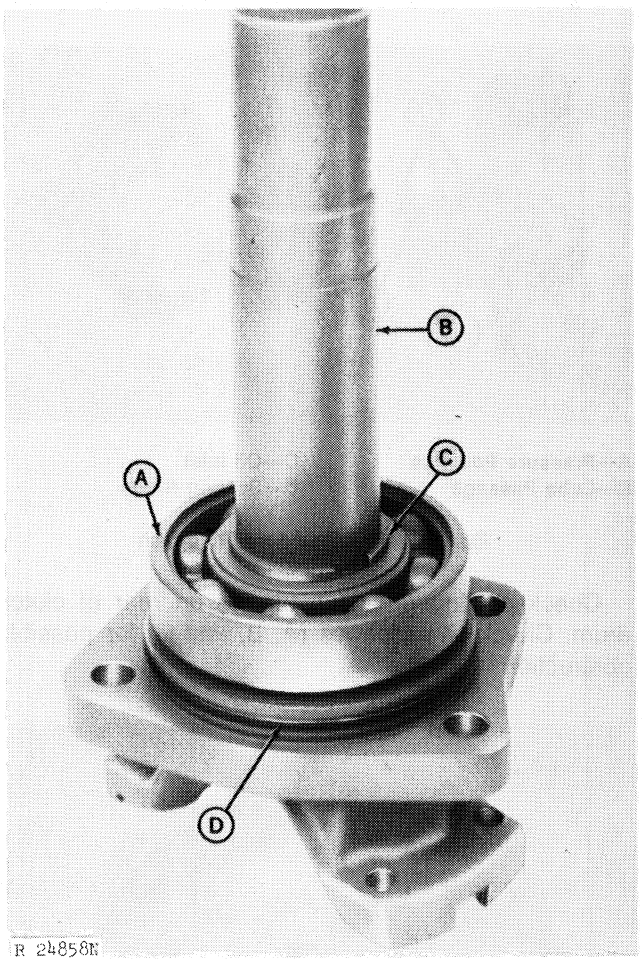

A—Bearing
B—Output Yoke
C—Snap Ring
D—O-Ring

Fig. 11-PTO Output Yoke Bearing

The PTO output yoke (B, Fig. 11) splines into the clutch drum and is piloted by a bushing in the PTO clutch drive gear. Check the bushing mating surface. O.D. of shaft at bushing is 1.2650 to 1.2660 in. (3.2131 to 3.2157 cm). O.D. of shaft at rear of drum is 1.728 to 1.730 in. (4.367 to 4.417 cm). I.D. of drum is 1.695 to 1.705 in. (4.305 to 4.331 cm). O.D. of shaft at rear bearing is 1.7720 to 1.7726 in. (4.5008 to 4.5024 cm). O.D. of shaft at rear seal mating surface is 2.6250 to 2.6280 in. (6.6709 to 6.6717 cm).

The PTO gear train is a three-gear unit: the clutch oil pump drive gear, the clutch oil pump idler gear, and the PTO clutch drive gear. The oil pump drive gear is serviced by removing the operating piston housing. (See Group 5 of this section for servicing.) The idler gear and PTO input gear can be serviced from the rear of front hinge. Servicing on the lower gears can also be performed by separating clutch housing from front hinge. (See Section 10, Group 25, for separation procedures.)

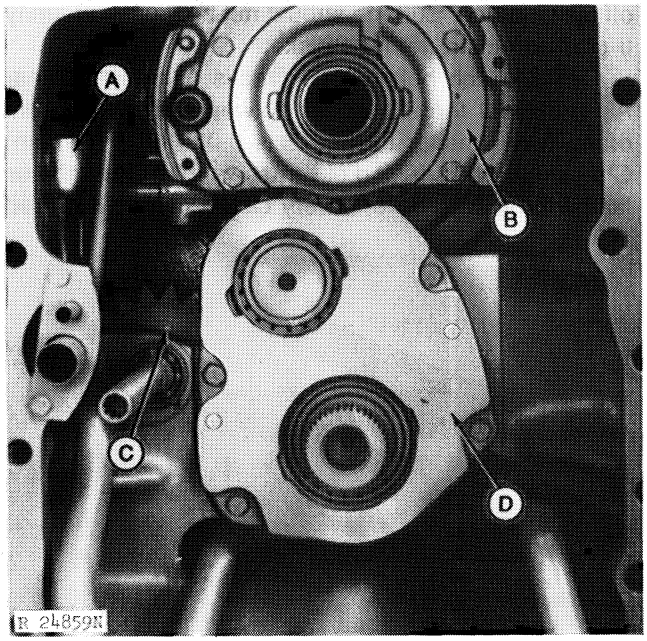

A—Clutch Valve Housing
B—Operating Piston Housing
C—Clutch Pump Gear
D—Bearing Quill

Fig. 12-Idler and PTO Input Gear Bearing Quill

Remove the four cap screws that retain the PTO bearing quill (D, Fig. 12). Quill is piloted by two dowel pins. Pry quill off dowel pins and remove quill and gears.

Inspect bushing in rear of PTO clutch input gear for scoring. I.D. of bushing should be 1.2690 to 1.2700 in. (3.2232 to 3.2258 cm). Drive new bushing in until it bottoms in bore of gear.

When replacing bearing, press bearing off gear. Heat bearing in oil not more than 300°F (149°C) to make installation easier.

Set end play on gear by adding or removing shims behind bearing cup in bearing quill bores. Front bearing cups are driven in bore until they bottom.

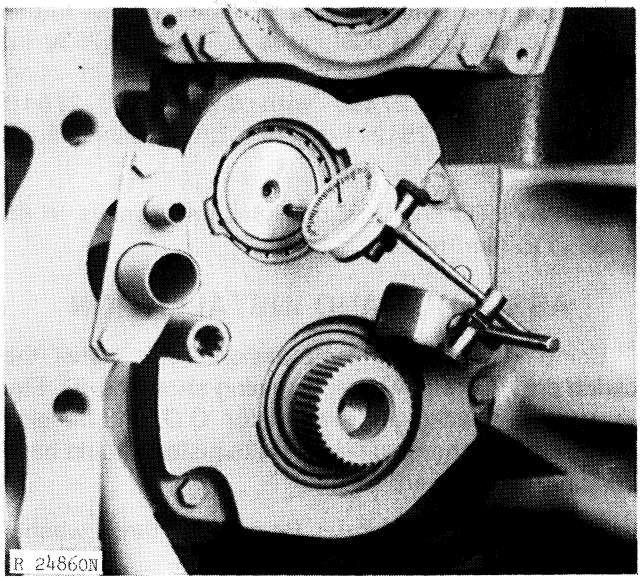

Fig. 13-Checking Clutch Oil Pump Idler Gear End Play

Adjust clutch oil pump idler gear end play (Fig. 13) by setting indicator stem on end of gear and measuring end play. Add or subtract shims to obtain 0.003 to 0.005 in. (0.076 to 0.127 mm) end play.

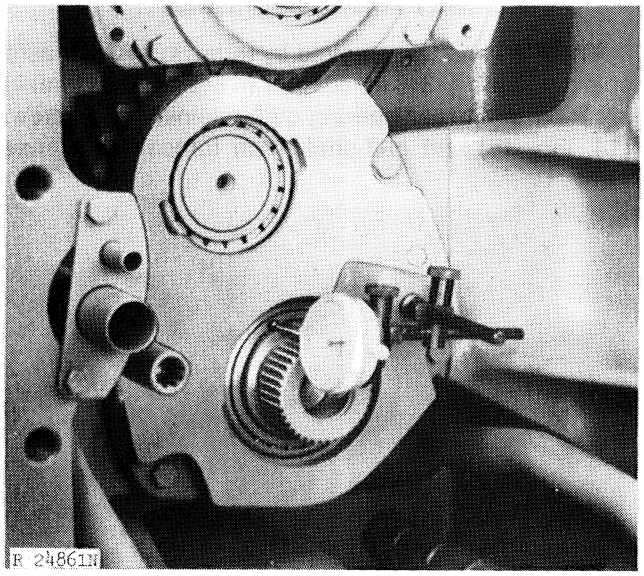

Fig. 14-Checking PTO Clutch Input Gear End Play

On PTO clutch input gear, set indicator tip on inner race of bearing cone (Fig. 14) and add or subtract shims under rear bearing cup to obtain 0.003 to 0.005 in. (0.076 to 0.127 mm) end play.

Join hinge to clutch housing (if separated) as instructed in Section 10, Group 25.

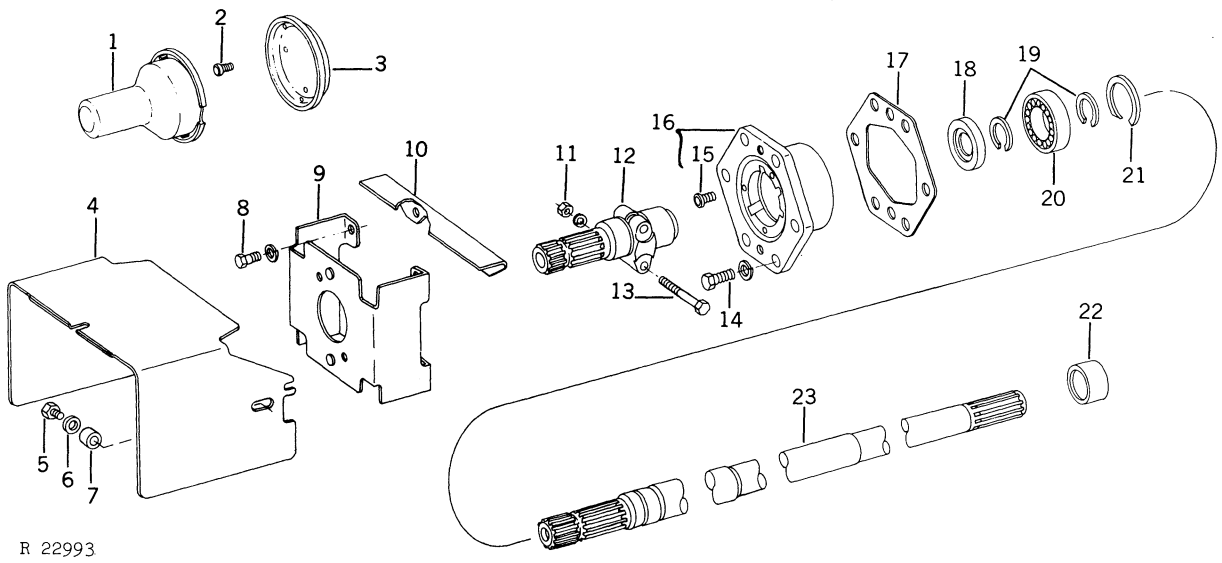

1—PTO Shaft Guard
2—Drive Screw
3—PTO Guard Retainer
4—PTO Master Shield
5—Cap Screw (2 used)
6—Washer
7—Spacer (2 used)
8—Cap Screw with Washer
9—PTO Guard Support
10—PTO Shaft Shield
11—Lock Washer and Nut
12—1-3/8 in. Adapter
13—Cap Screw
14—Cap Screw and Lock Washer
15—Special Drive Screw
16—PTO Bearing Quill
17—Gasket
18—Oil Seal
19—Snap Ring (2 used)
20—Ball Bearing
21—Snap Ring
22—PTO Shaft Bushing
23—PTO Shaft

Fig. 15-PTO Shaft with Related Parts

Litho in U.S.A.

REPAIR—Continued

The PTO shaft is removed by removing PTO master shield and the 1-3/8 in. adapter (if equipped). Remove six PTO shaft rear bearing quill retaining cap screws (14, Fig. 15) and pull shaft from transmission case.

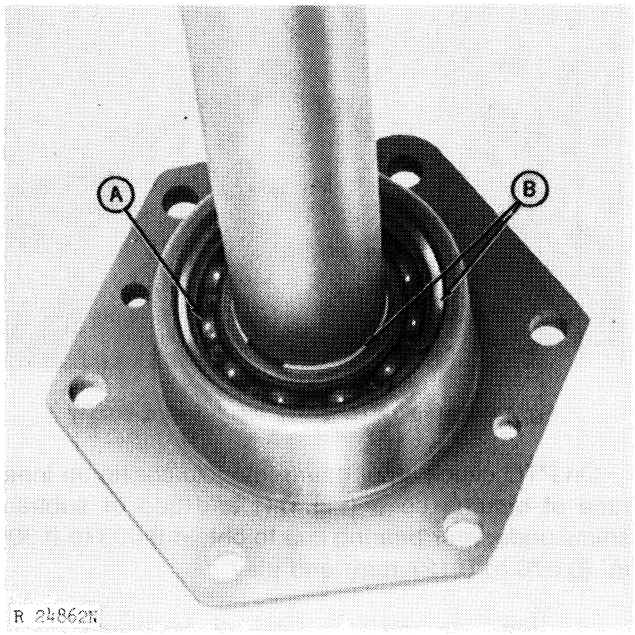

A—Ball Bearing **B—Snap Rings**

Fig. 16-PTO Shaft Rear Bearing Quill

When replacing PTO shaft bearing (20, Fig. 15), remove the housing snap ring (Fig. 15) from bearing quill and push shaft with bearing out of quill. There are two shaft snap rings (19, Fig. 15) on opposite sides of the bearing. Remove the one nearest splined end and press bearing off shaft.

Check shaft at bearing mating surface. O.D. of shaft is 1.9684 to 1.9690 in. (4.9997 to 5.0013 cm). O.D. of shaft at oil seal surface is 1.937 to 1.939 in. (4.898 to 4.948 cm). O.D. at bushing is 1.715 to 1.735 in. (43.56-44.07 mm).

When replacing oil seal in bearing quill, remove old seal and drive new seal in flush with bearing side of seal bore using OTC driver No. 27487 with disks Nos. 27526 (22-11/16″) and 17513 (1-7/8″).

Press new bearing on shaft until bearing seats against other snap ring and install snap ring.

Inspect PTO shaft bushing in center wall of transmission case. I.D. of bushing is 1.7490 to 1.7530 in. (4.4443 to 4.4453 cm). Drive new bushing in using OTC driver No. 27487 with disks Nos. 27510 (11-11/16″) and 27512 (1-13/16″). Drive bushing flush with rear wall.

Tighten PTO shaft bearing quill cap screws to 85 ft-lbs (115 Nm) torque.

ASSEMBLY AND INSTALLATION

Using the JDT-24 Compression Tool, install the clutch drum spring washer retaining snap ring (D, Fig. 7). Use new packings (H) on piston O.D. and housing I.D. Spring washer installed next to piston should have concave side toward piston.

Install clutch hub in drum. Be sure the thrust washer is between the hub and the drum.

IMPORTANT: The wavy separator plates should be stacked out of phase to prevent excessive leakage. The plates have a center punch mark on the high side of one of the tangs to identify the high side of the plate. The plates must have the high side opposite the high side of the preceding plate.

Alternately install disks and plates in drum with disks splined to hub and plates tanged to notches in drum. Install backing plate and tighten retaining cap screws to 20 ft-lbs (27 Nm) torque.

Install PTO clutch assembly in clutch housing. Place thrust washer over rear of clutch drum between drum and bearing quill. Check sealing rings to make sure they are in proper groove and ends are hooked together.

Install rear bearing quill in clutch housing and tighten bearing quill retaining cap screws to 85 ft-lbs (115 Nm) torque. Make sure the rubber packing is in place between the quill and front hinge.

Install clutch output yoke in bearing quill and tighten retaining cap screws to 35 ft-lbs (47 Nm) torque. Be sure the O-ring is in place near spline at front end of shaft and rubber packing is in place between cover and quill.

Install U-joint and guard. Install two-speed planetary, clutch oil pump and filter relief valve housing. See Group 10 of this section for procedure. See also Section 10, Group 25 for additional information.

Group 20
TORQUE DIVIDER

GENERAL INFORMATION

The torque divider is located between the rear hinge and the transmission case of the tractor. The rear hinge serves as the front cover for the torque divider.

The torque divider provides for the flow and transfer of power from the engine to the transmission or from the engine to the PTO power shaft. The need of transferring power is created by the difference in height of the centerline of the engine to differential drive shaft and the Independent PTO to the PTO shaft.

There are seven combination-shaft-and-gears in the torque divider housing through which power can be directed: the transmission power flow having three; the PTO power flow having four.

Power Flow

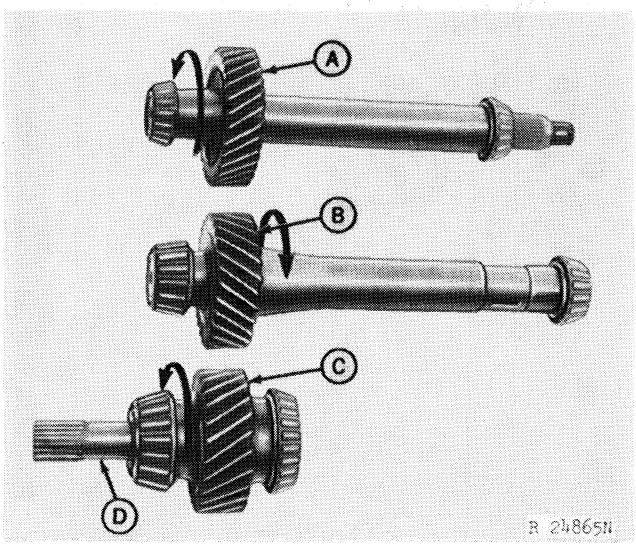

A—Upper Input Gear
B—Upper Input Idler Gear
C—Transmission Input Gear
D—Transmission Input Shaft

Fig. 1-Power Flow To Transmission

The transmission power flow comes into the torque divider from the clutch U-joint. The upper input shaft gear (A, Fig. 1) receives the power from the clutch U-joint which transfers it to the upper input idler gear (B). The flow continues to the transmission input gear (C) and the input shaft (D) to the transmission drive shaft.

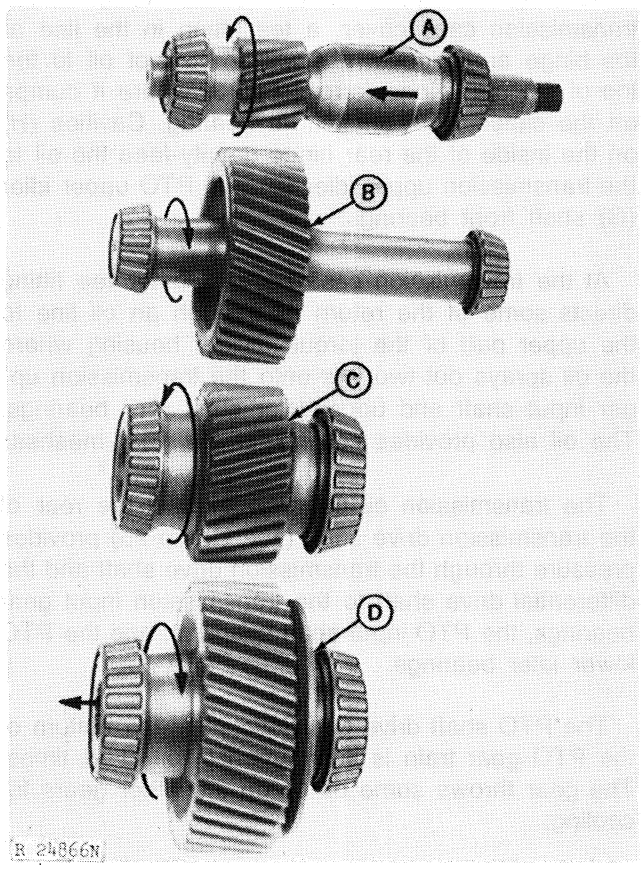

A—Upper Input Shaft
B—Upper Input Idler
C—Lower Input Idler
D—Lower Output Gear

Fig. 2-PTO Power Flow

The PTO power flow is received from the Independent PTO U-joint by the PTO upper input shaft (A, Fig. 2). Power is transferred to the PTO upper idler (B) gear and to the PTO lower idler (C) gear. Power is directed to the PTO output gear (D) which is splined to the PTO shaft.

Oil Flow

Lubrication in the torque divider is provided by three methods: pressure oil, gravity-fed oil, and reservoir oil in which lower parts of PTO gear train are immersed. Refer to oil flow, page 50-5-4, to follow lubrication circuit.

Litho in U.S.A.

Oil Flow—Continued

Return oil from the clutch housing being picked up by the return oil pump located in tandem with the clutch oil pump routes oil to the transmission case cover where it is dumped on the low range pinion on the transmission drive shaft. While in route to the transmission case cover, a tee fitting in the line at the hinge area directs a small amount of oil to the top of the rear hinge (arrow, Fig. 3) where it dumps on the clutch input shaft front bearing. Cavities (H) on the inside of the rear hinge gravity-feed the oil to the transmission upper idler (B) and PTO upper idler (G) shaft front bearings.

At the transmission case cover another tee fitting directs some of the return oil through an oil line to the upper part of the torque divider housing where the oil sprays out two jets onto the transmission upper input shaft and upper idler shaft rear bearings. The oil also provides cooling for the gear meshes.

The transmission oil pump located at the rear of the transmission drive shaft (see Group 25) provides pressure through the transmission drive shaft and the differential drive shaft to the transmission input gear bearings, the PTO input shaft bearings, and the PTO lower idler bearings.

The PTO shaft drive gear located at the bottom of the PTO gear train is submerged in oil at all times. The gear throws some oil up on the other gears for cooling.

DIAGNOSING MALFUNCTIONS

Excessive Noise With PTO Engaged

Rumbling noise
- Bearing failure in PTO gear train
- Lack of lubrication on PTO bearings

Pulsating Noise
- Broken gear teeth
- Missing gear teeth

Excessive Noise When Transmission Engaged

Rumbling noise
- Bearing failure in transmission input gear train
- Lack of lubrication to shaft bearings

Pulsating noise
- Broken gear teeth
- Missing gear teeth

REPAIR

Removal

Separate the tractor between the rear hinge and the torque divider housing or separate at hinge pins and remove rear hinge. See Section 10, Group 25 for instructions. Remove transmission input yoke using JDT-27 Holding Tool to loosen nut.

⚠ CAUTION: Be sure to observe all safety precautions when separating the tractor. Use support where necessary.

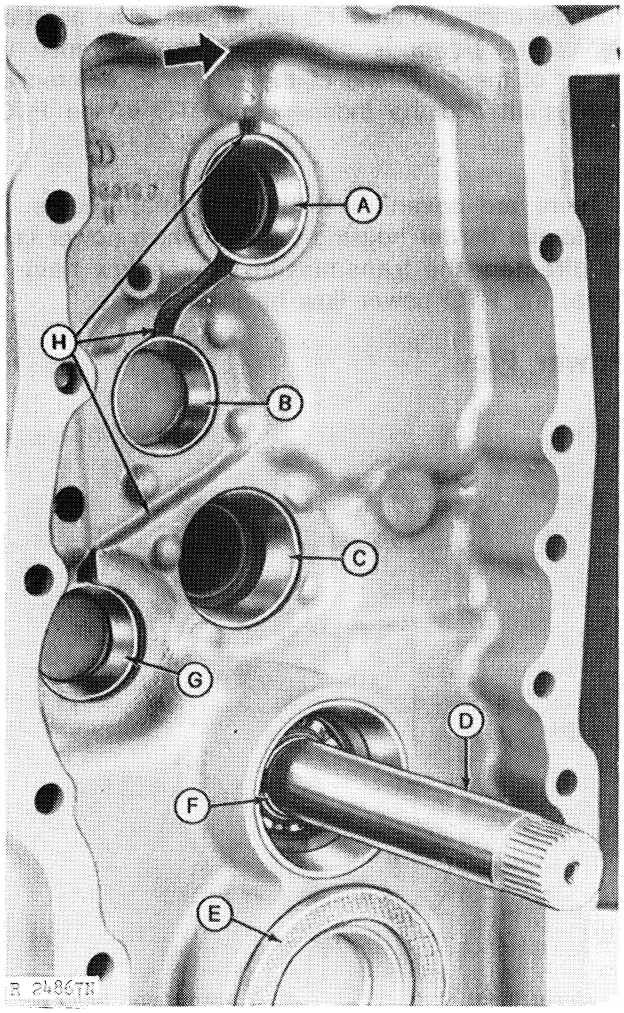

A—Upper Input Shaft Cup
B—Upper Input Idler Cup
C—PTO Input Shaft Cup
D—Front Differential Output
E—PTO Brake Piston
F—Snap Ring
G—PTO Upper Idler Cup
H—Oil Cavities

Fig. 3-Rear Hinge Viewed From Rear

When the separation has been made, the inside of the rear hinge can be examined. Notice the oil cavities that gravity-feed oil to the bearings.

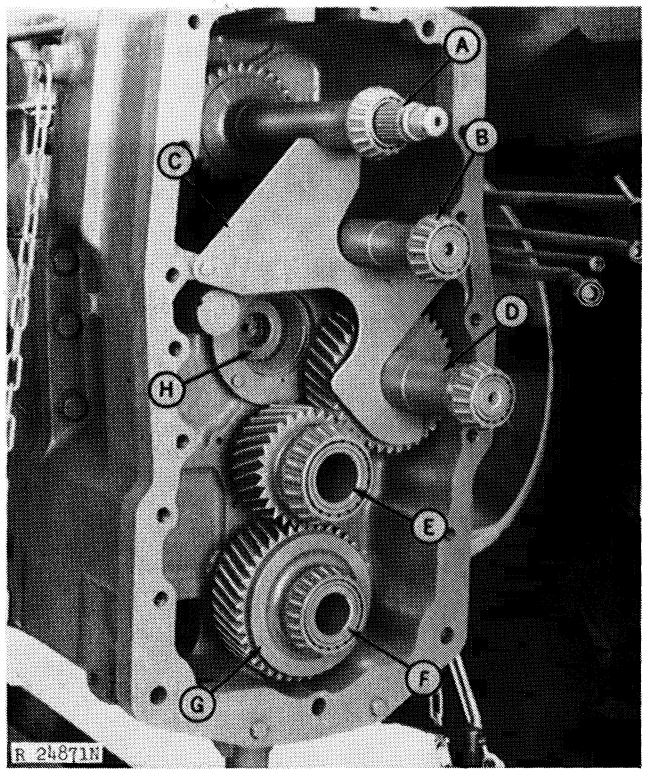

A—Upper Input Shaft
B—Upper Input Idler Shaft
C—Steadyrest
D—PTO Upper Idler Shaft
E—PTO Lower Idler Gear
F—PTO Drive Pinion
G—PTO Brake Surface
H—Transmission Input Gear

Fig. 4-Torque Divider Viewed From Front

When the separation is made, the PTO input shaft will fall unless the shaft is caught when housing is far enough apart to catch the shaft.

The shafts in the torque divider housing (Fig. 4) are kept from falling or being damaged by the steadyrest (C) that is secured to the housing by two attaching cap screws. All of the shafts can be removed from the torque divider housing without removing the steadyrest except for the upper PTO idler shaft (D).

After removing the shafts from the housing, remove the steadyrest. Hold PTO upper idler shaft in place until steadyrest is removed, then remove shaft.

The PTO lower idler (E, Fig. 4) will likely remain with the rear hinge when separation is made. However, positioning the gear with the PTO gear train as shown in Fig. 4 will make assembly easier.

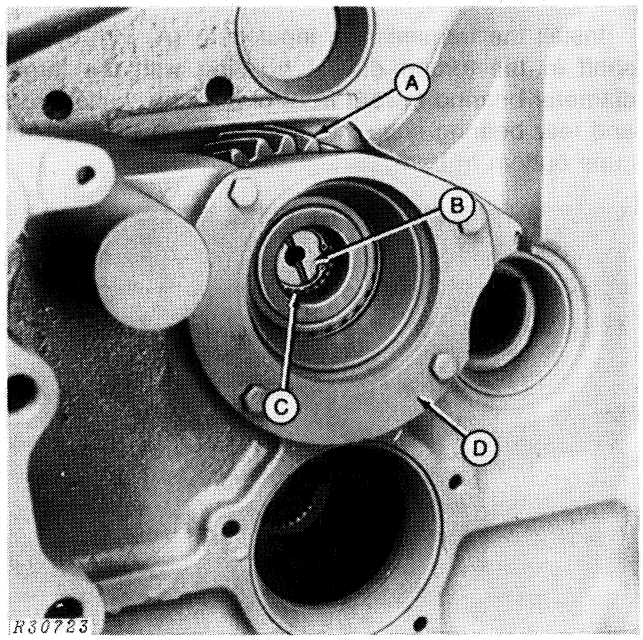

A—Transmission Input Gear
B—Transmission Input Shaft
C—Retaining Ring
D—Bearing Quill

Fig. 5-Transmission Input Gear and Shaft

The quill (D, Fig. 5) that secures the transmission input gear (A) and shaft (B) can now be removed. Note retaining ring (C) that retains the transmission input shaft. Remove bearing quill and gear from housing.

Inspection And Assembly

Each of the shafts have roller bearing cones pressed onto each end of the shaft. Examine the roller bearings for pitting or scoring. Replace if necessary. Remove bearing cone from shaft by using a simple bearing puller that can be positioned under the inner race of the cone and not on the cage that retain the rollers. Heat new bearings and install them until the bearing bottoms on the shaft shoulder.

Install the transmission input gear (A, Fig. 6) and shaft in the torque divider housing with the larger diameter bearing toward front of housing. Install front and rear bearing cups into their respective bore until cups bottom in bore.

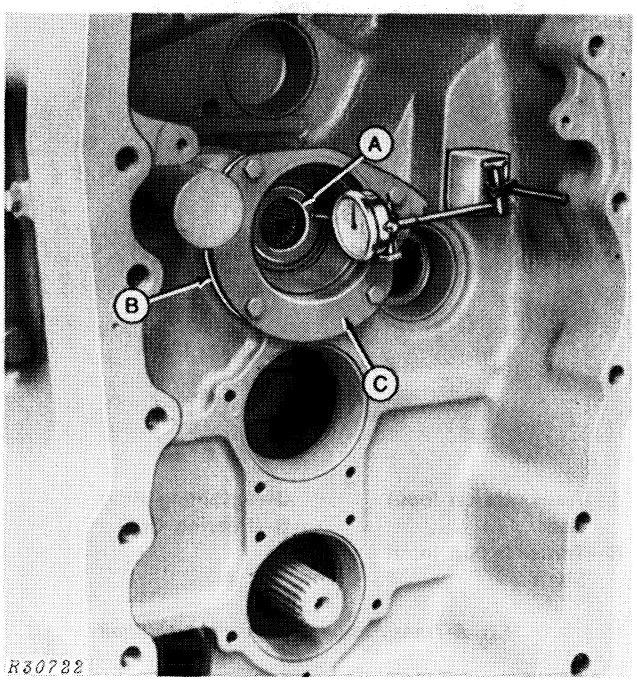

A—Transmission Input Gear
B—Shims
C—Quill

Fig. 6-Adjusting Transmission Input Gear End Play

Install front bearing quill (C, Fig. 6) with enough shims (B) under quill to provide end play on the gear. Position indicator dial pointer on end of gear (A) and measure end play. Adjust end play by adding or removing shims (B) to give 0.001 to 0.004 in. (0.025 to 0.102 mm) end play. Tighten bearing quill cap screws to 35 ft-lbs (47 Nm) torque.

Install transmission input shaft (B, Fig. 5) and retaining ring (C).

Install steady rest (C, Fig. 7) in housing along with PTO upper idler shaft (D). Tighten the two cap screws to 20 ft-lbs (27 Nm) torque.

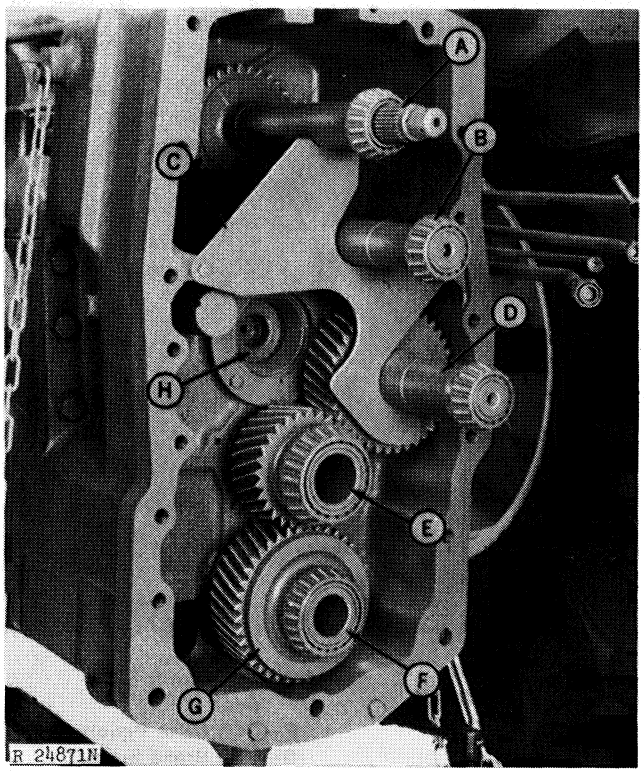

A—Upper Input Shaft
B—Upper Input Idler Shaft
C—Steadyrest
D—PTO Upper Idler Shaft
E—PTO Lower Idler Gear
F—PTO Drive Pinion
G—PTO Brake Surface
H—Transmission Input Gear

Fig. 7-Steadyrest and Shafts Installed

Position remainder of shafts with gears except the PTO input shaft in torque divider housing as shown in Fig. 7. PTO lower idler (E) should be removed from front differential shaft (if not already done so) and put in place in gear train.

Before joining rear hinge and torque divider housing, remove PTO input shaft front bearing quill and drive front bearing cup (C, Fig. 3) from rear hinge.

Join rear hinge to torque divider housing. See Section 10, Group 25 for procedure. Install hinge-to-torque divider housing cap screws that do not secure the U-joint guards and tighten to 300 ft-lbs (407 Nm) torque.

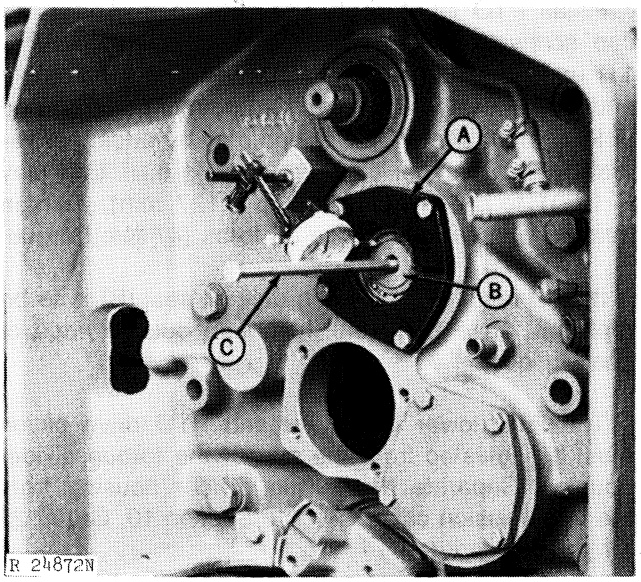

A—End Plate Tool **C—Cap Screw**
B—Shaft

Fig. 8-Checking Upper Input Idler Shaft End Play

Obtain a R58057 or R63067 bearing cap to use as a tool in setting end play on the upper input idler shaft. Cut a hole approximately 2-1/2 inches (63.5 mm) in diameter in the center of the cap.

NOTE: The upper input idler shaft and the PTO upper idler shaft both have one 0.048 inch (1.22 mm) shim. This shim is used to reduce initial excessive end play when setting shaft end play. This shim should be installed next to bearing cap when final adjustments are made to avoid the nuisance of smaller shims sliding out of position.

The upper input idler shaft end play can be obtained two ways:

1. The shaft has a 3/8-inch (9.53 mm)-16 UNC threaded hole in the forward end. Install a long cap screw in end of shaft until screw bottoms.

   Place the constructed bearing cap tool with the 0.048-inch (1.22 mm) shim (largest of shims) on rear hinge and tighten cap screws to 35 ft-lbs (47 Nm) torque.

   Place a dial indicator pointer to set on end of cap screw or on end of shaft. Use the cap screw as a handle and move the shaft back and forth and read end play. Add enough shims under bearing cap to give 0.001 to 0.005-inch (0.025 to 0.127 mm) end play.

2. Install the constructed bearing cap tool with the 0.048-inch (1.22 mm) shim on rear hinge. Tighten attaching cap screw to 35 ft-lbs (47 Nm) torque.

   Place a dial indicator so that pointer rests on end of shaft. Reach through PTO input shaft opening and grasp upper input idler shaft. Move the shaft back and forth and read indicator end play.

   Add enough shims to thick shim to give 0.001 to 0.005-inch (0.025 to 0.127 mm) end play.

Install bearing cap with proper shims. Tighten cap screws to 35 ft-lbs (47 Nm) torque.

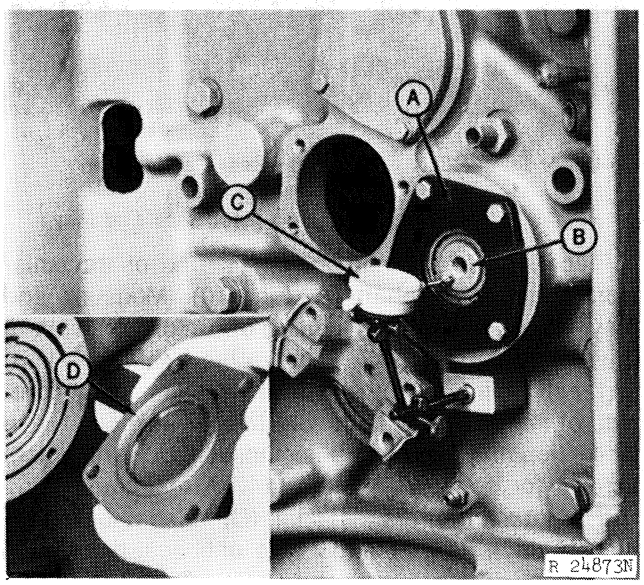

A—Bearing Cap Tool **C—Dial Indicator**
B—Shaft **D—Shims**

Fig. 9-Adjusting PTO Upper Idler Shaft End Play

The PTO upper idler shaft (B, Fig. 9) end play is also obtained using the R58057 or R63067 bearing cap tool (A). Install the 0.048-inch (1.27 mm) shim next to bearing cup and install bearing cap tool onto hinge and tighten attaching cap screws to 35 ft-lbs (47 Nm) torque.

Position dial indicator pointer on end of PTO upper idler shaft. Reach through PTO input shaft hole and move upper idler shaft to read end play. Add (or adjust) shims (D, Fig. 9) to give 0.001 to 0.005 inch (0.025 to 0.127 mm) end play. Install proper bearing cap and tighten cap screws to 35 ft-lbs (47 Nm) torque.

Inspection and Assembly—Continued

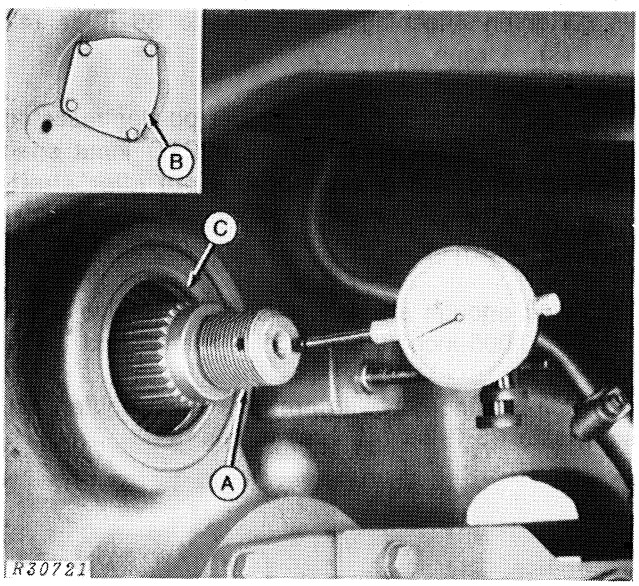

A—Upper Input Shaft **B—Rear Bearing Cap**
C—Oil Seal

Fig. 10-Measuring Transmission Input Shaft End Play

Place a dial indicator pointer on end of transmission upper input shaft (A, Fig. 10). Measure end play. Adjust end play by adding or removing shims at the rear of the housing. Remove the bearing cap (B) to reach shims. Place the thickest shim to the outside of shim pack to help hold thinner shims in place while the rear cover is being installed. Tighten cap screws for cover to 35 ft-lbs (47 Nm) torque.

If input shaft front oil seal (C) needs to be replaced, drive new seal into bore until seal bottoms in bore.

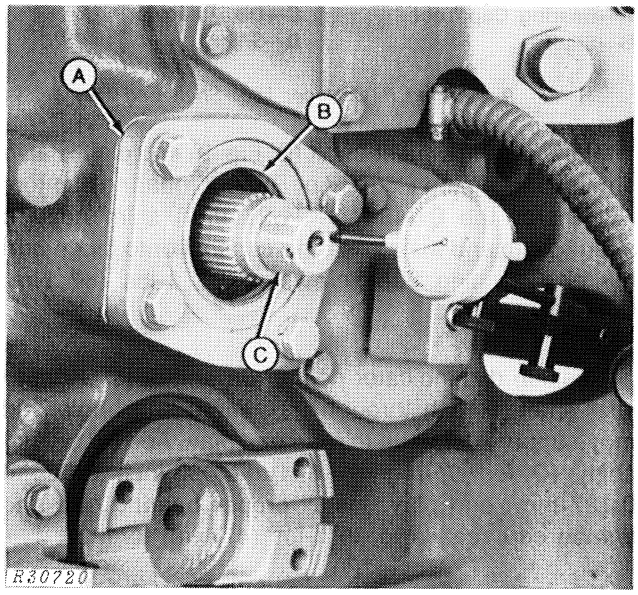

A—Shims **C—PTO Input Shaft**
B—Oil Seal

Fig. 11-Measuring PTO Input Shaft End Play

Install PTO input shaft and bearing quill. Tighten cap screws securely. Place enough shims (A, Fig. 11) under the front bearing quill to give measurable end play. Mount dial indicator so pointer rests on end of PTO input shaft (C). Set end play by adding or removing shims under the front bearing quill. End play is 0.001 to 0.005 in. (0.025 to 0.127 mm). Tighten bearing quill cap screws to 35 ft-lbs (47 Nm) torque.

If PTO input shaft bearing quill oil seal (B) is to be replaced, drive new seal flush with outside edge of bearing quill.

The PTO lower idler gear and PTO drive pinion must be adjusted from the rear of the torque divider housing. Separate the torque divider housing from the transmission case. Refer to Section 10, Group 25 for this procedure.

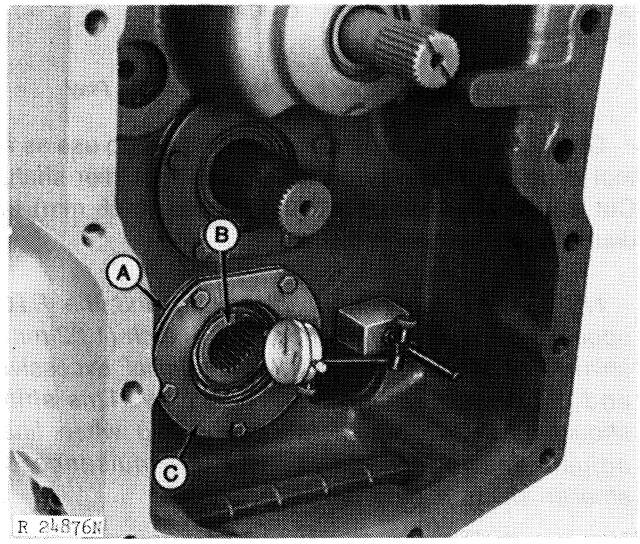

A—Shims **C—Bearing Quill**
B—PTO Drive Pinion

Fig. 12-Measuring PTO Drive Pinion End Play

When adjusting PTO drive pinion (B, Fig. 12) end play, add enough shims (A) under bearing quill (C) to give a measurable amount of end play. Place dial indicator pointer to rest on rear shaft of gear. Add or remove enough shims to give 0.001 to 0.005 inch (0.025 to 0.127 mm) end play. Tighten bearing quill cap screws to 35 ft-lbs (47 Nm) torque.

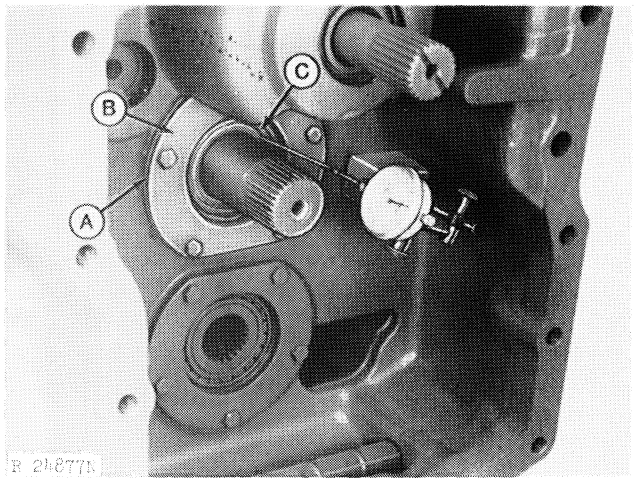

A—Shims
B—Bearing Quill
C—PTO Lower Idler Gear

Fig. 13-Measuring PTO Lower Idler Gear End Play

When adjusting PTO lower idler end play, add enough shims under bearing quill to give measurable end play. Position dial indicator pointer to rest on rear surface of gear. Add or remove enough shims to give 0.001 to 0.005 inch (0.025 to 0.127 mm) end play. Tighten bearing quill cap screws to 35 ft-lbs (47 Nm) torque.

After setting end play of bearings, join transmission case to torque divider housing and tighten cap screws to 300 ft-lbs (407 Nm) torque.

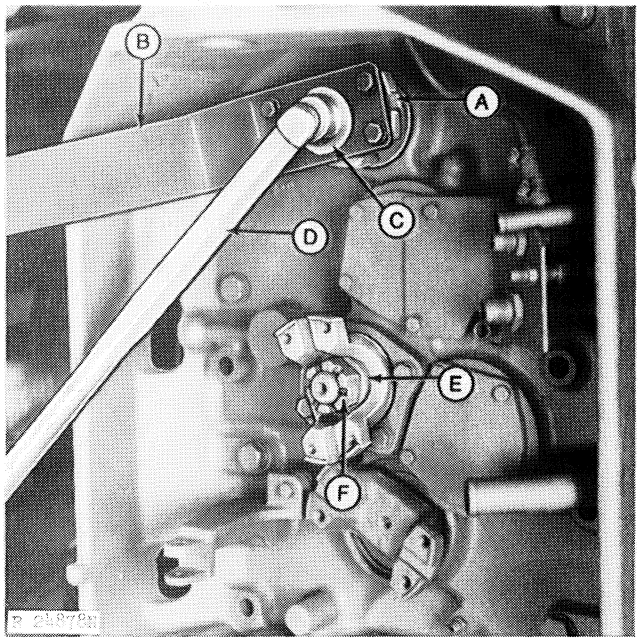

A—Yoke
B—JDT-27 Holding Tool
C—1-1/4" Socket
D—Torque Wrench
E—Washer
F—Castellated Nut

Fig. 14-Tightening Yoke Nut Using JDT-27

When installing the yokes and nuts on the transmission input shaft and PTO input shaft, make sure the O-ring is installed over the end of the shaft between the nut and the yoke. The O-ring fits into a groove. It could slip out of groove while tightening nut.

NOTE: The transmission input shaft yoke and PTO input shaft yoke can be interchanged on their respective shafts on 8430 Models only.

8630 Tractors use different yokes for each shaft. Its PTO input shaft yoke is noticeably smaller than its transmission input shaft yoke. If the PTO yoke is installed on the transmission input shaft, the yoke will bind against the bearing.

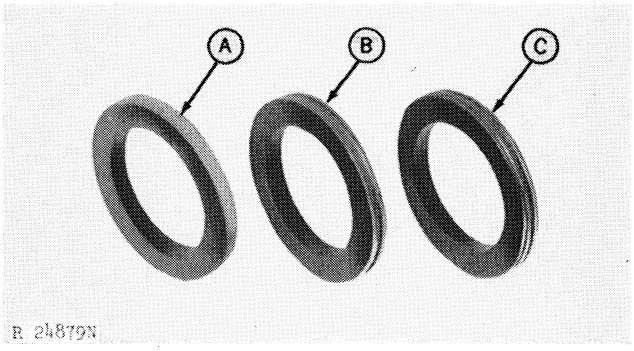

A—0.2500 in. (6.350 mm)
B—0.2477 in. (6.292 mm)
C—0.2454 in. (6.233 mm)

Fig. 15-Adjusting Washers

Install and tighten the four cap screws that come with the JDT-27 Yoke Holding Tool (A, Fig. 14). Tighten the castellated nut to 450 ft-lbs (610 Nm) torque. (Use JDST-38 Torque Multiplier if torque wrench does not have proper torque capacity. The tool will hit against the hinge which acts as a stop.) Use the proper thickness washer (Fig. 15) to allow the cotter pin to be installed. Do not bend cotter pin over end of shaft.

Joint tractor as instructed in Section 10, Group 25.

Torque the torque divider-to-rear hinge cap screws to 350 to 400 ft-lbs (475-545 Nm) (47.5-54.5 kgm).

Torque the torque divider housing-to-transmission case cap screws to 300 ft-lbs (407 Nm) (40.7 kgm).

Litho in U.S.A.

Group 25
QUAD-RANGE TRANSMISSION

GENERAL INFORMATION

The Quad-Range transmission is the second major component of the Quad-Range design. The first major element being the Quad-Range planetary which is located in the clutch housing and provides a two-speed (direct drive and overdrive) power flow to the transmission.

The Quad-Range transmission is an eight-speed combination synchronized and collar shift design housed in the transmission case.

FOS

Refer to FOS Manual 30 - POWER TRAINS - Chapter 3 - for a complete explanation of the mechanical transmission.

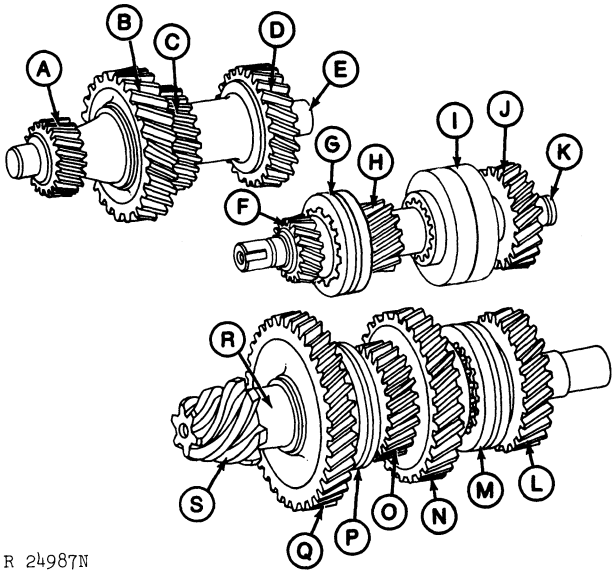

R 24987N

A—A-Range Countershaft Gear
B—D-Range Countershaft Gear
C—B-Range Countershaft Gear
D—C-Range Countershaft Gear
E—Countershaft
F—Reverse Pinion
G—Reverse Shifter Collar
H—Low Pinion
I—Low and High Synchronizer
J—High Pinion
K—Transmission Drive Shaft
L—C-Range Differential Drive Shaft Gear
M—B and C-Range Shifter Collar
N—B-Range Differential Drive Shaft Gear
O—D-Range Differential Drive Shaft Gear
P—A and D-Range Shifter Collar
Q—A-Range Differential Drive Shaft Gear
R—Differential Drive Shaft
S—Differential Drive Shaft Bevel Pinion

Fig. 1-Transmission Shafts and Gears

Speed selection is controlled by two levers on the control console. The outer lever (range selector) controls the collar shifts of the differential drive shaft gears to provide four speed ranges labeled A, B, C, and D. A "park" position is located behind A and a tow position between C and D.

The inner lever (speed selector) controls the 2-speed planetary and the synchronized and collar shifts of the transmission drive shaft. The high and low pinion shifts are synchronized shifts, and the reverse pinion shift is a collar shift.

The illustration and chart on this page show the gear combinations used to obtain the various tractor speeds.

Speed Selection	2-Speed Planetary Element	Transmission Drive Shaft Pinion	Differential Drive Shaft Gear Set
A-1	Direct Drive Clutch	Low	A-Range
A-2	Overdrive Brake	Low	A-Range
A-3	Direct Drive Clutch	High	A-Range
A-4	Overdrive Brake	High	A-Range
B-1	Direct Drive Clutch	Low	B-Range
B-2	Overdrive Brake	Low	B-Range
B-3	Direct Drive Clutch	High	B-Range
B-4	Overdrive Brake	High	B-Range
C-1	Direct Drive Clutch	Low	C-Range
C-2	Overdrive Brake	Low	C-Range
C-3	Direct Drive Clutch	High	C-Range
C-4	Overdrive Brake	High	C-Range
D-1	Direct Drive Clutch	Low	D-Range
D-2	Overdrive Brake	Low	D-Range
D-3	Direct Drive Clutch	High	D-Range
D-4	Overdrive Brake	High	D-Range
A-1R	Direct Drive Clutch	Rev.	A-Range
A-2R	Overdrive Brake	Rev.	A-Range
B-1R	Direct Drive Clutch	Rev.	B-Range
B-2R	Overdrive Brake	Rev.	B-Range

This arrangement provides four forward speeds in each of the A through D ranges and two reverse speeds in each of the A and B ranges. A mechanical interlock on the levers prevents engaging reverse in C and D-ranges. Lateral movement of the speed selector lever provides power-shifts between 1 and 2, 3 and 4, and 1 reverse and 2 reverse. Longitudinal movement between 2 and 3 causes a combination power-shift and low pinion-high pinion synchronized shift requiring clutching. Longitudinal movement from 1 forward to 1 reverse causes a collar shift (the tractor must be stopped). Movement from 1 reverse to 1 forward is synchronized.

When following the flow of power through the transmission, use the chart listed below. The gears and pinions listed in the chart are engaged to their respective shafts, with the exception of the A-range differential drive shaft gear which acts as an idler in the B range reverse speeds.

SHIFT STATION A

A1/A2	Power in H B A Q Power out
A3/A4	Power in J D A Q Power out
A1R/A2R	Power in F Q Power out

SHIFT STATION B

B1/B2	Power in H B C N Power out
B3/B4	Power in J D C N Power out
B1R/B2R	Power in F Q A C Power out

SHIFT STATION C

C1/C2	Power in H B D L Power out
C3/C4	Power in J D L Power out

SHIFT STATION D

D1/D2	Power in H B O Power out
D3/D4	Power in J D B O Power out

Park position is obtained by engaging both the A-Range and C-Range differential drive shaft gears (Q and L, Fig. 1) with the differential drive shaft (R) at the same time. Since these gears are in constant mesh with the A-Range and C-Range countershaft gears (A and D) which cannot rotate independently on each other, the differential drive shaft is prevented from turning and locks the rear wheels of the tractor.

A mechanical interlock assures that the speed selector lever must be in neutral position when the range selector lever is moved. The neutral start switch permits starting only in the neutral position.

In "Tow" position, both the shifter collars (M and P, Fig. 1) are in neutral.

Lubrication Oil

Lubrication oil for the transmission shafts, bearings and gear are supplied by a gear-type oil pump mounted on the front wall of the differential compartment and is driven by the transmission drive shaft. This drive shaft turns when the engine clutch supplies power to it, therefore, the oil pump only operates when the transmission drive shaft is turning. (See Fig. 2 of Section 50, Group 5 for an oil flow schematic.)

A transmission oil pump pressure sensing switch is mounted to the side of the differential case. An oil line connects the pump to the switch. Any time the oil pressure to the switch drops below 2 to 6 psi (0.14 to 0.42 kPa), the switch lights the indicator lamp on the dash. But to avoid the light coming on when the tractor is stopped, an interlock switch has been provided that is attached to the pressure regulating valve housing on the left side of the clutch housing.

Refer to "Hydraulic Pumps" in FOS Manual 10 — HYDRAULICS, for information on pumps.

DIAGNOSING MALFUNCTIONS

Hard To Shift

Shift control parts dry
Shifter quadrants binding
Shifter camshaft end play incorrect
Shifters worn, damaged, or broken

Excessive Gear Clash When Shifting

Operator attempting to shift too fast
Transmission clutch dragging
Operator not fully disengaging clutch
Shifter lever and cam detent not in proper relation

Excessive Transmission Noise

Transmission parts worn or damaged
Transmission low on oil
Transmission oil pump not functioning

REMOVAL

Separate the transmission from the torque divider housing. See Section 10, Group 25 for instructions. Be sure to observe all safety precautions.

Transmission shafts (Fig. 1) can only be removed in the following order: 1. Transmission drive shaft (input shaft), 2. Differential drive shaft (output shaft) and, 3. Countershaft.*

Remove ball detent retainers before attempting to remove shifter shaft and shifters. Use care when removing, as retainers are spring loaded.

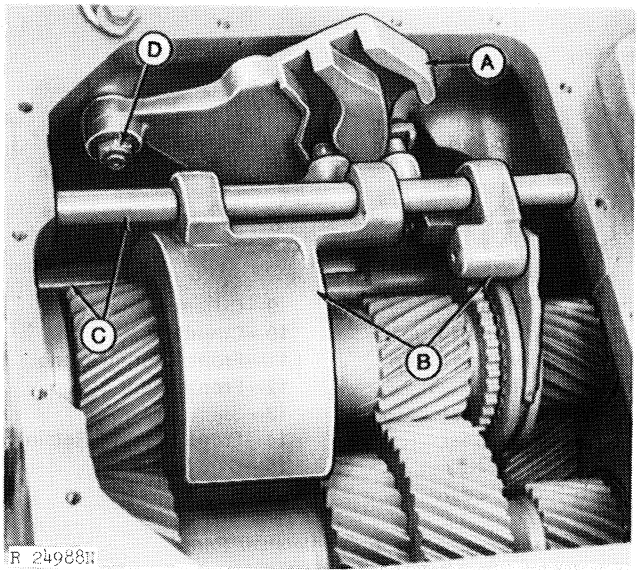

A—Shifter Cam
B—Shifters
C—Shifter Shafts
D—Shaft Nut

Fig. 2-Speed Shifters and Shifter Cam

**NOTE: If only the countershaft is to be removed, the pinion shaft may not have to be removed. In most cases the pinion shaft must be removed first.*

Lower shifter arm to place speed shifter cam (A, Fig. 2) in its lowest position. Remove nut (D) and cam shaft and remove cam. Avoid damaging oil seal in shifter shaft support. Remove shifter shafts (B) out front of transmission case. Rotate shifters (C) upward and remove them.

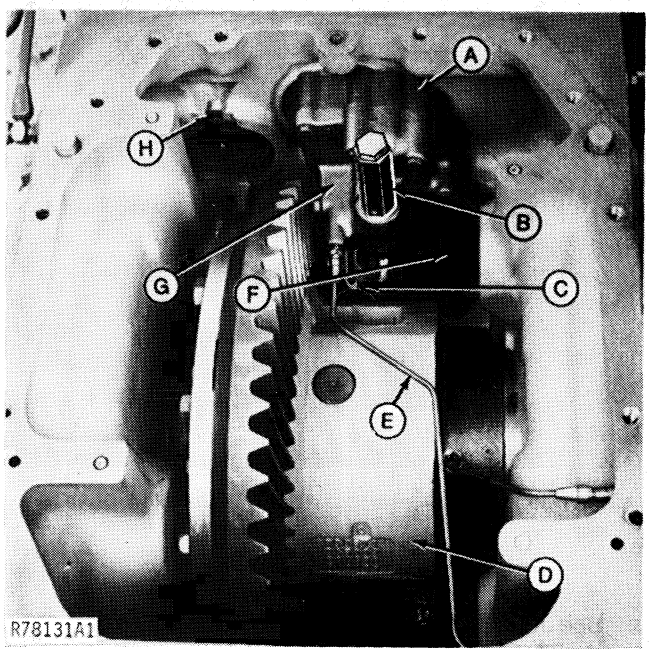

A—Pump Body
B—Relief Valve Body
C—Drive Shaft Tube
D—Differential
E—Lube Sensing Line
F—Inlet
G—Pump Manifold
H—Snap Ring

Fig. 3-Transmission Oil Pump

Remove lube pressure oil line from oil pump manifold. Remove relief valve body (D, Fig. 3) from manifold. (Relief valve body removal will be difficult due to sealant applied to body threads.)

Rotate differential housing until opening in housing is halfway between top and side position. This is necessary for long cap screw removal in manifold.

The oil pump manifold (B) and the oil pump body (C) must be removed separately. Remove cap screws (A) from manifold and remove manifold, leaving oil pump body in place. Then dislodge pump body from drive shaft, rotate body, and lift out.

Remove front transmission drive shaft bearing cup retainer from transmission case. Use a brass drift to drive transmission drive shaft rearward until gears on transmission drive shaft contact gears on countershaft.

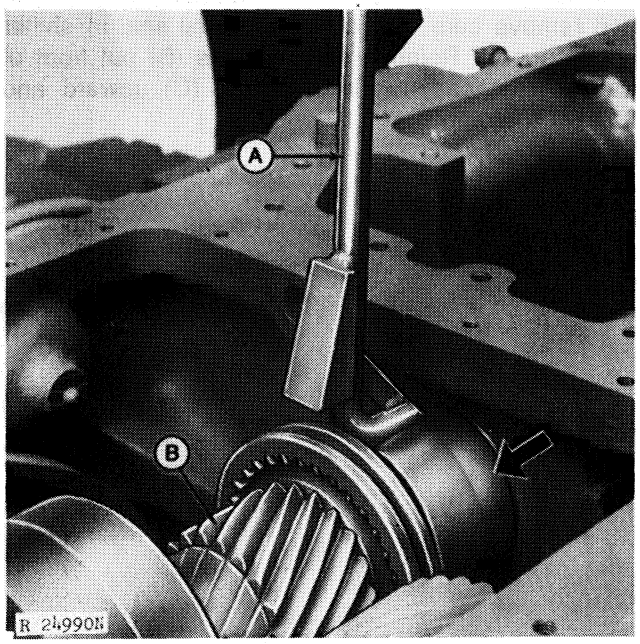

A—JDT-30
B—Transmission Drive Shaft

Fig. 4-Removing Rear Bearing Cup

Use JDT-30 bearing cup removal tool and drive rear bearing cup from transmission case. Move drive shaft rearward, tilt upward at front, and remove from transmission case.

If the differential drive shaft is to be removed, the differential must be removed. Refer to Group 30 of this section for differential removal.

Place the range shifter arm on side of transmission case in Park position. Use JDT-29 Wrench and loosen differential drive shaft lock nut after coupling and retainer have been removed. Remove lock nut from shaft.

Remove locking nut and shifter cam shaft on range shifter cam from case. Avoid damaging oil seal in shifter shaft support. Remove bottom shifter shaft from case. Rotate shifter cam and remove. Let range shifters drop in bottom of transmission case.

Position a large C-clamp into transmission drive shaft front bearing quill opening so that front differential drive shaft gear (C-range) is held against front transmission case wall. Use a soft hammer and drive the differential drive shaft rearward, while alternately tightening C-clamp, until drive shaft front bearing cone is free.

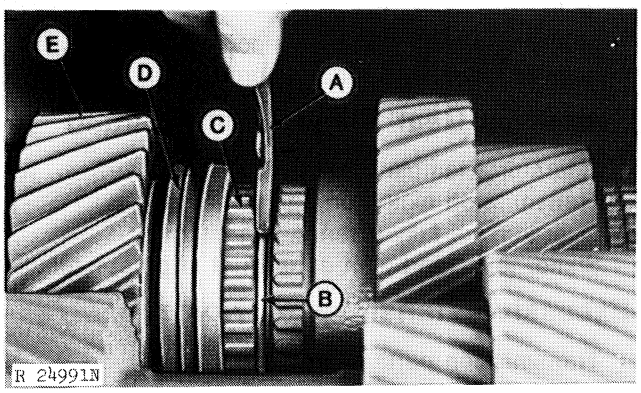

A—Plier
B—Snap Ring
C—Shifter Gear
D—Shifter Collar
E—C-Range Gear

Fig. 5-Expanding Snap Ring

As the differential driveshaft is driven rearward, slide the gears, washers, and snap rings forward. Use a snap ring expander to remove snap rings (B, Fig. 5) from groove. There are four snap rings on the differential drive shaft. After the rear snap ring has been moved out of its groove, use a long brass drift to drive the shaft tree. Use care not to allow shaft to drop on rear bearing cup causing damage to A-range bushing surface of shaft.

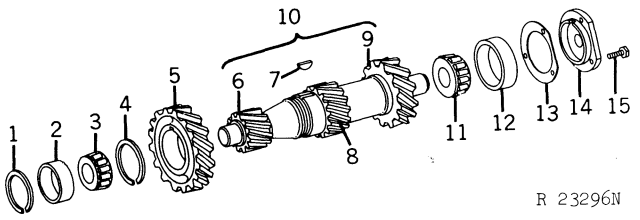

1—Snap Ring
2—Rear Bearing Cup
3—Rear Bearing Cone
4—Snap Ring
5—D-Range Gear
6—A-Range Gear
7—Woodruff Key
8—B-Range Gear
9—C-Range Gear
10—Countershaft
11—Front Bearing Cone
12—Front Bearing Cup
13—Shim
14—Front Bearing Retainer
15—Cap Screw

Fig. 6-Countershaft Parts

Remove countershaft rear snap ring (1, Fig. 6). Use a brass drift and drive the countershaft (10) to the rear as far as possible. Remove front bearing retainer (14), tilt front of shaft up, and remove from case.

REPAIR

NOTE: 8430 Tractors (-5248) and 8630 Tractors (-7454) may have one of two different transmission drive shaft assemblies. The original assembly uses a synchronizer assembly made up of four disks on each side of its blocker (4x4 synchronizer).

The original 4x4 assembly may have been replaced by a larger assembly which is also used in 8430 Tractors (5249-) and 8630 Tractors (7455-). This later design (5x7 synchronizer) uses five synchronizer disks on the high side of the blocker and seven disks on the low side of the synchronizer blocker.

Parts are available for either synchronizer and drive shaft assembly. If the change is made from the 4x4 design to the 5x7 design, the transmission drive shaft and various other shifter parts must also be replaced. See the tractor Parts Catalog for further parts information.

A later 4x6 synchronizer assembly also replaces the 5x7 design. The shaft, shifters and related parts for the 4x6 assembly are interchangeable with the earlier 5x7 parts but not with the 4x4 parts.

If the transmission drive shaft must be disassembled, remove rear snap ring (1, Fig. 7 or 8) from end of transmission drive shaft and use a press or a puller to remove rear bearing cone (3).

To remove synchronizer blocker assembly, remove front snap ring (25) and use puller or press to remove front bearing cone. Pull synchronizer-and-blocker assembly off shaft.

NOTE: When blocker is removed from 4x4 shaft, four spring-loaded detent balls will be released from the blocker. DO NOT lose these balls. (other shafts have six detents.)

The synchronizer disks and plates (16, Fig. 7) are retained in the blocker by spring-steel retainers (18). Insert a small screwdriver under internal tang of separator plate and pry over end of retainer to remove.

Remove 4x6 retainer by prying under retainer (17, Fig. 8).

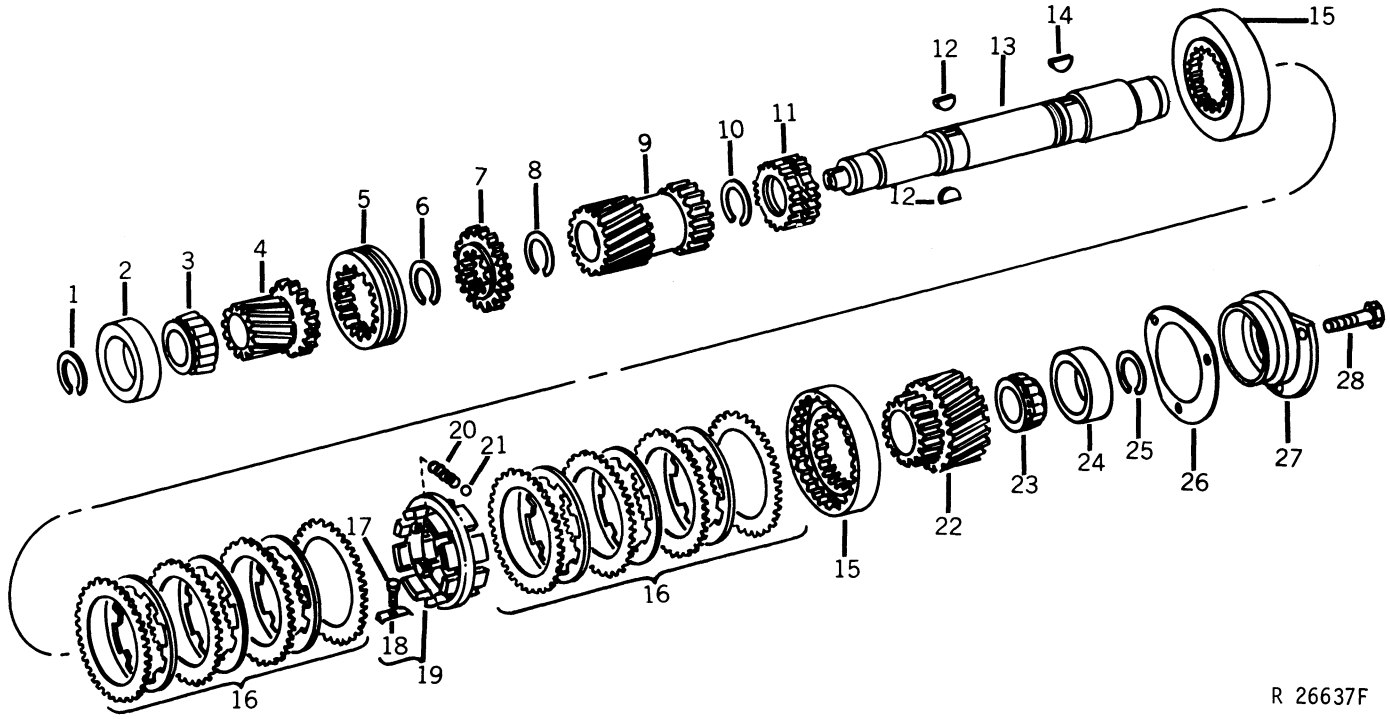

1—Snap Ring
2—Bearing Cup
3—Bearing Cone
4—Reverse Pinion**
5—Reverse Shifter Collar
6—Snap Ring
7—Reverse Drive Collar**
8—Snap Ring
9—Low Pinion*
10—Snap Ring
11—Low and High Drive Collar*
12—Woodruff Key (2 used)**
13—Transmission Drive Shaft*
14—Woodruff Key*
15—Low and High Drum (2 used)*
16—Disks and Plates (2 sets used)*
17—Special Cap Screw*
18—Retainer*
19—Low and High Blocker*
20—Spring (4 used)*
21—Steel Ball (4 used)*
22—High Pinion*
23—Bearing Cone
24—Bearing Cup
25—Snap Ring
26—Shims (as required)
27—Front Bearing Housing
28—Special Cap Screw (3 used)

Fig. 7-Transmission Drive Shaft Parts (4x4 Synchronizer Parts)

NOTE: Single asterisk (*) in legend of Figs. 7 and 8 indicates that the part is not interchangeable between the two shaft designs.

Double asterisk (**) indicates that the part is not interchangeable on some 8630 Tractors (-5774).

Fig. 8 shows 4x6 synchronizer parts. The 5x7 parts illustration would have an extra disk on each side of the large snap ring on the blocker (18).

Inspect synchronizer disks for glazing or excessive wear. Replace the disks as a set if any disk has a thickness of less than 0.060-inch (1.52 mm) or if disks are glazed or grooves are not distinctive.

Check the oil passages in the transmission drive shaft to make sure lube holes are open and free of dirt and sludge. Plugged oil passages will result in excessive wear of parts.

Inspect transmission drive shaft for excessive wear. O.D. at high range pinion is 2.5932 to 2.5942 inches (65.867 to 65.893 mm). O.D. at low range pinion is 2.2021 to 2.2031 inches (55.933 to 55.959 mm). O.D. at reverse range pinion is 1.8745 to 1.8755 inches (47.612 to 47.638 mm).

Install the drive collar (11, Fig. 7 or 8) onto drive shaft. Make sure Woodruff Key (14) is in place. Seat snap ring (10) in groove. Install other parts as shown. Be sure remaining snap rings (8 and 6) are installed properly. Press new bearing (if replaced) onto shaft until cone (3) bottoms. Install proper thickness snap ring (1) in groove. Refer to parts catalog.

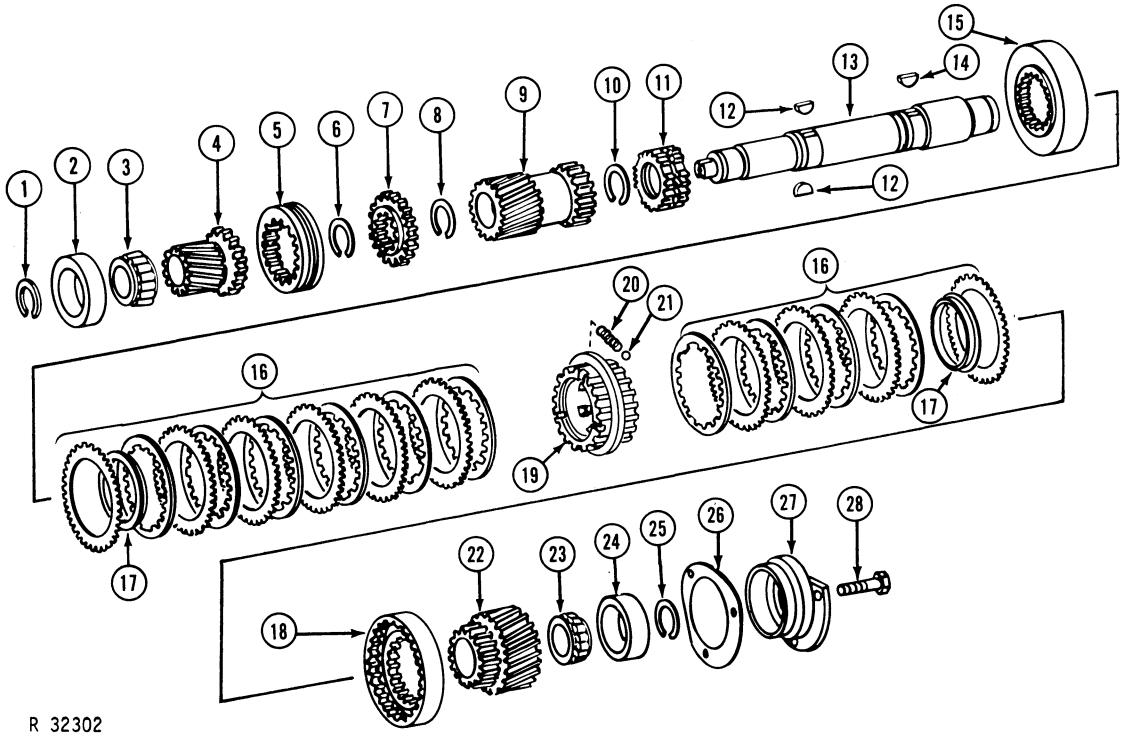

1—Snap Ring
2—Bearing Cup
3—Bearing Cone
4—Reverse Pinion**
5—Reverse Shifter Collar
6—Snap Ring
7—Reverse Drive Collar**
8—Snap Ring
9—Low Pinion*
10—Snap Ring
11—Low and High Drive Collar*
12—Woodruff Key (2 used)**
13—Transmission Drive Shaft*
14—Woodruff Key*
15—Low Drum*
16—Disks and Plates*
17—Retainer*
18—High Drum*
19—Low and High Blocker*
20—Spring (6 used)*
21—Steel Ball (6 used)*
22—High Pinion*
23—Bearing Cone
24—Bearing Cup
25—Snap Ring
26—Shims (as required)
27—Front Bearing Housing
28—Special Cap Screw (3 used)
*** —See Interchangeability Note**

Fig. 8-Transmission Drive Shaft Parts (4x6 Synchronizer)

4x6 Synchronizer Assembly

1. With the mating surfaces of the blocker and disk retainers free from grease and oil, spray T43511 Adhesive Primer (Loctite Primer Grade T) on the mating sides and diameter of the blocker. Also prime the mating diameter and flange area of the retainers. Allow the primer to dry.

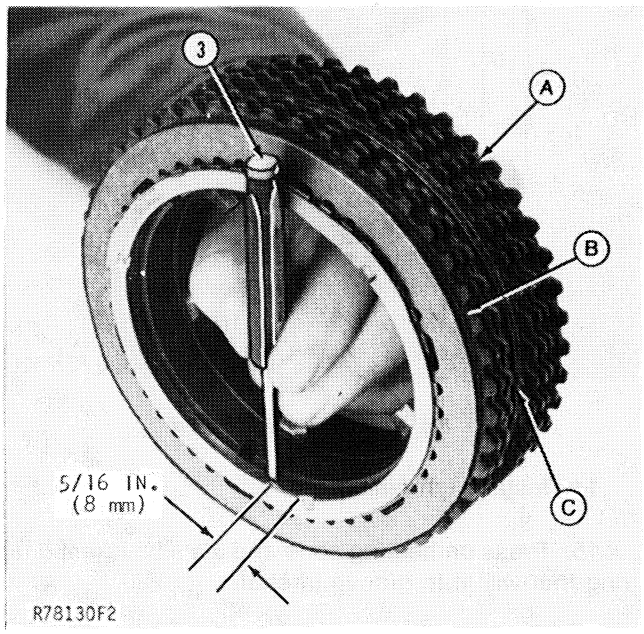

A—Low Disks and Plates
B—High Disks and Plates
C—Snap Ring

Fig. 9-Staking Synchronizer Retainer to Blocker

2. Install five low speed synchronizer disks and six plates (A, Fig. 9) on side of blocker with deep splines. Plate should face blocker snap ring (C) and alternate with disks.

a) Apply AT35125 (RC 35 Loctite Adhesive) to primed surface of retainer.

b) Press retainer into blocker.

c) Be sure notch on retainer aligns with notch on blocker.

IMPORTANT: Press retainer into blocker within three minutes of applying adhesive. Be sure no adhesive is in splines. Stake retainers to blocker within fifteen minutes.

3. Stake disk retainer to blocker in twelve equally spaced areas.

a) Leave 5/16 in. (8 mm) between notches in retainer and stake (See Fig. 9).

b) Install three high speed disks and four plates (B) and attach in the same manner.

A—JDT-31 Loading Tool
B—Drive Collar

Fig. 10-Loading Blocker

4. Load six springs and balls in blocker using JDT-31 Loading Tool (A, Fig. 10). Load with low speed side (5 disks, 6 plates) down on the tool.

5. Install one of the two remaining synchronizer disks in low drum against finished surface.

4x6 Synchronizer Assembly

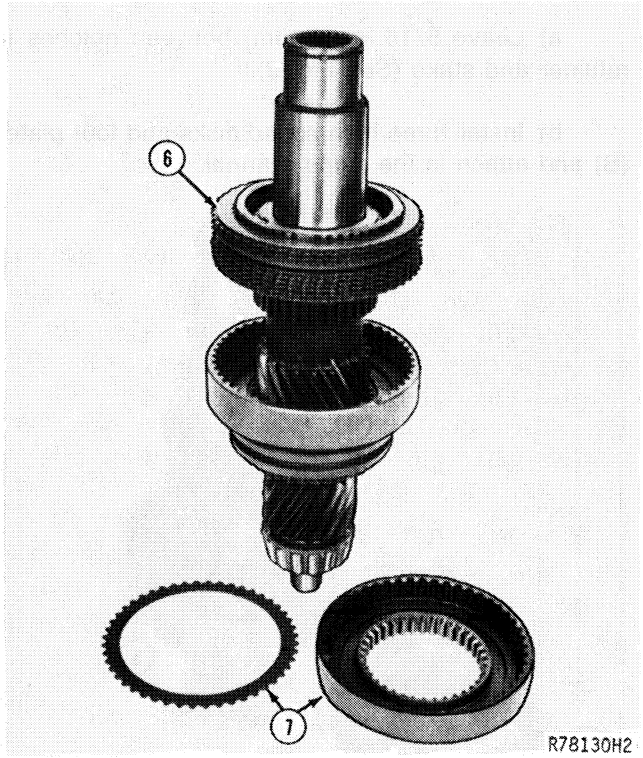

Fig. 11-Installing Synchronizers

6. Install loaded synchronizer blocker with Load Tool. With blocker over drive collar (B, Fig. 10), remove Load Tool.

7. Install remaining disk in high drum and install drum over synchronizer assembly. Tape synchronizer drums together to ease assembly and installation of shaft.

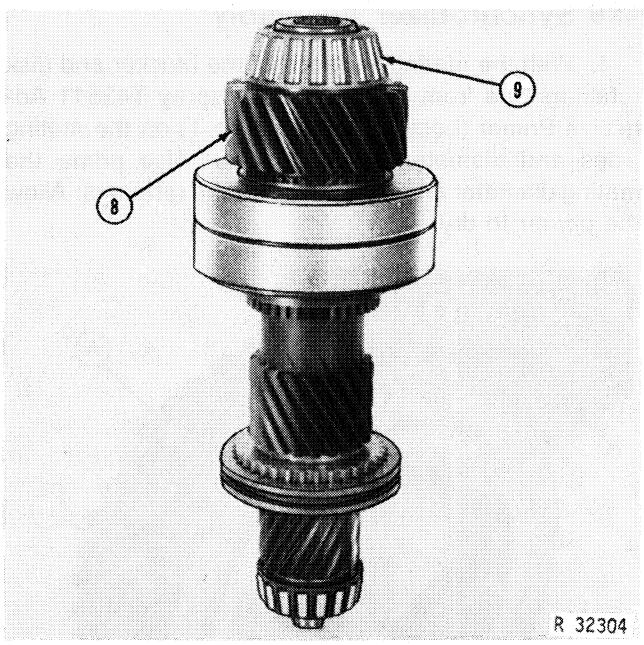

Fig. 12-Installing High Pinion

14. Install high pinion.

15. Press on bearing cone and install thickest snap ring that will fit in groove in shaft.

4x4 Synchronizer Assembly

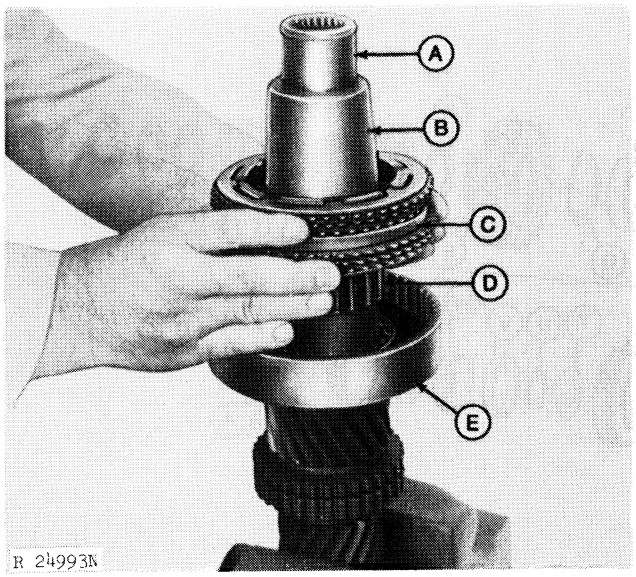

A—Transmission Drive Shaft
B—JDT-31 Loading Tool
C—Synchronizer and Blocker Assembly
D—Low-Range Pinion
E—Synchronizer Drum

Fig. 13-Installing Synchronizer and Blocker Assembly

When installing the synchronizer and blocker assembly onto the transmission drive shaft, position the JDT-31 Blocker Loading Tool over front end of shaft and place shaft with large end up in vise. (Protect gear teeth on shaft.)

Put springs in place in blocker and place blocker down over Loading Tool. When blocker is low enough on tool, position detent balls on end of springs. Pushing blocker with balls down further will cause the balls to drop into the detent notches in drive collar.

Remove tool, place drum half on blocker assembly, and install bearing and snap ring until bearing bottoms on shoulder and snap ring drops in groove properly. Transmission drive shaft is now ready for installation in transmission case.

Countershaft Repair and Assembly

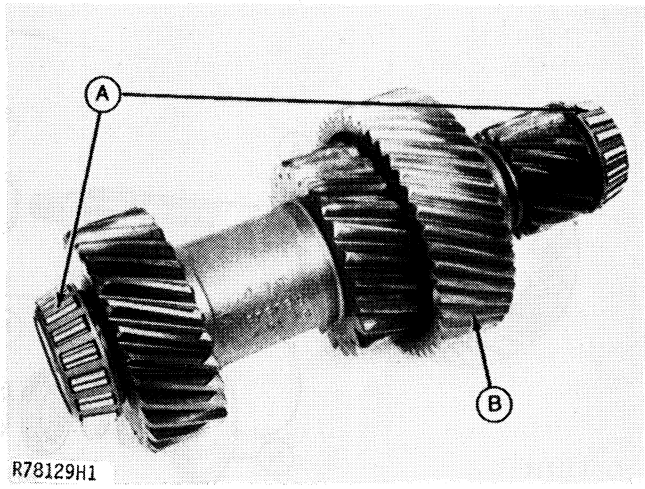

A—Bearing Cones **B—D-Range Gear**

Fig. 14-Countershaft Assembly

1. Remove snap ring and press off large D-range gear and remove Woodruff key. The remainder of the gears are part of the shaft.

2. To assemble gear, install key, press on gear and bearing cones, and replace snap ring.

NOTE: Be sure bearing cones are installed tight against the shoulders on the countershaft diameter. O.D. of snap ring when fully seated should be 3.742 to 3.748 inches (95.05-95.20 mm).

Differential Drive Shaft Repair

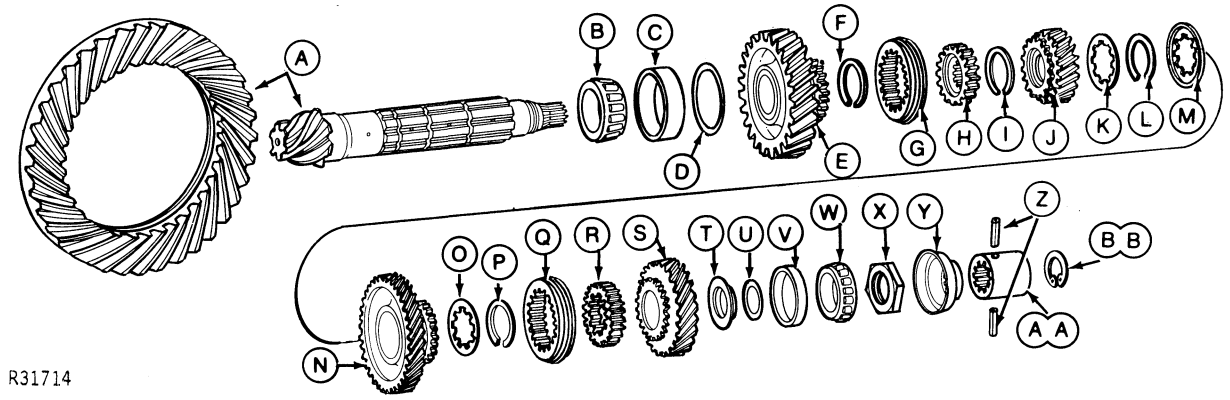

A—Differential Drive Shaft With Ring Gear
B—Rear Bearing Cone
C—Rear Bearing Cup
D—Shims
E—A-Range Gear
F—Snap Ring
G—Shifter Collar
H—Rear Shifter Gear
I —Snap Ring
J —D-Range Gear
K—Thrust Washer
L —Snap Ring
M—Thrust Washer
N—B-Range Gear
O—Thrust Washer
P—Snap Ring
Q—Front Shifter Collar
R—Front Shifter Gear
S—C-Range Gear
T—Thrust Washer
U—Shim
V—Bearing Cup
W—Bearing Cone
X —Nut
Y —Retainer
Z —Spring Pins
AA—Coupler
BB—Retaining Ring

Fig. 15-Differential Drive Shaft Parts

If the differential drive shaft must be replaced, the differential ring gear must also be replaced. The ring gear and drive shaft are supplied as matched sets. Use both new parts when replacing either. See Group 30 of this section for further instructions. Repair and removal of the differential are explained in Group 30 of this section also.

Inspect differential drive shaft for wear. O.D. of gear mating surface is 2.9895 to 2.9905 inches (75.993 to 75.959 mm). Be sure oil passages are not plugged.

Check bushing in A-range gear (E, Fig. 15) for scoring or unusual wear. I.D. of bushing is 2.9945 to 2.9955 inches (76.060 to 76.086 mm). If bushing is badly scored or grooved, gear with bushing must be replaced. Replace gear if spline length at O.D. of spline is less than 0.28 inch (7.1 mm).

Replace C-range gear(s) if spline length at O.D. of spline is less than 0.37 inch (9.4 mm).

Installation And Adjustment

NOTE: Shafts must be installed in the following sequence.

Countershaft Installation and Adjustment

Install countershaft, drive rear bearing cup in bore until snap ring (1, Fig. 5) can be installed. Seat bearing cup against snap ring.

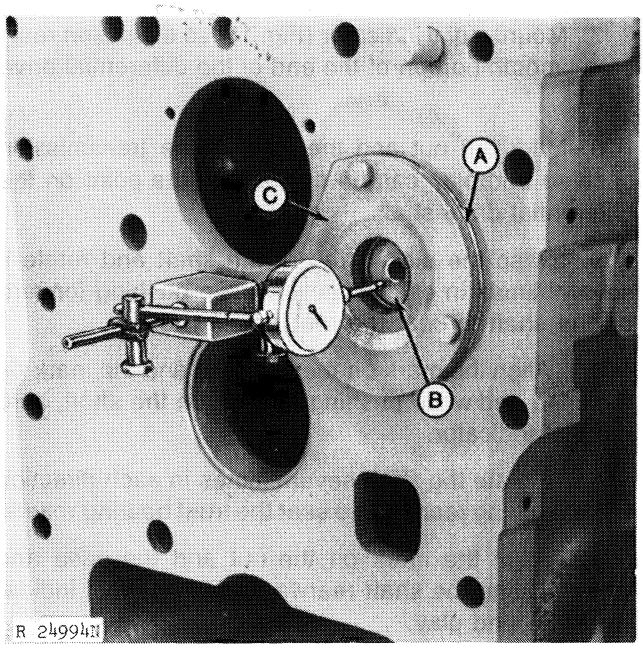

A—Shims **B—Countershaft**
C—Bearing Retainer

Fig. 16-Measuring Countershaft End Play

Install and tighten front bearing retainer (C) cap screws to 35 ft-lbs (47 Nm) torque. Mount a dial indicator to check for end play of 0.001 to 0.004 inch (0.025 to 0.102 mm) (Fig. 10). Adjust end play by adding or removing shims (A) under front bearing retainer.

Differential Drive Shaft Assembly and Adjustment

NOTE: If the differential drive shaft is replaced, the differential ring gear must also be replaced since they are supplied as a matched set. Use both new parts when replacing either. (See Group 30 of this Section for complete adjustment procedure.)

1. Install rear bearing cup with shims in transmission case. If the rear bearing cup, cone or differential drive shaft is to be replaced, determine the proper shim pack as follows:

a) Subtract the number etched on the pinion end of the differential drive shaft from 9.538.

b) The difference is the correct shim pack to use in front of the rear bearing cup.

2. Install front bearing cup in transmission case using a 4-7/16 inch (113 mm) driver disk (OTC 27554). Be sure cup is properly seated.

⚠ CAUTION: If hot oil is used to heat parts, remember that oil fumes or oil can ignite above 380°F (193°C). Use a thermometer and do not exceed 360°F (182°C). Do not allow a flame or heating element to be in direct contact with the oil. Heat the oil in a well-ventilated area. Plan a safe handling procedure to avoid burns.

3. Heat rear bearing cone to 300°F (150°C) and install bearing on differential shaft tight against bevel pinion.

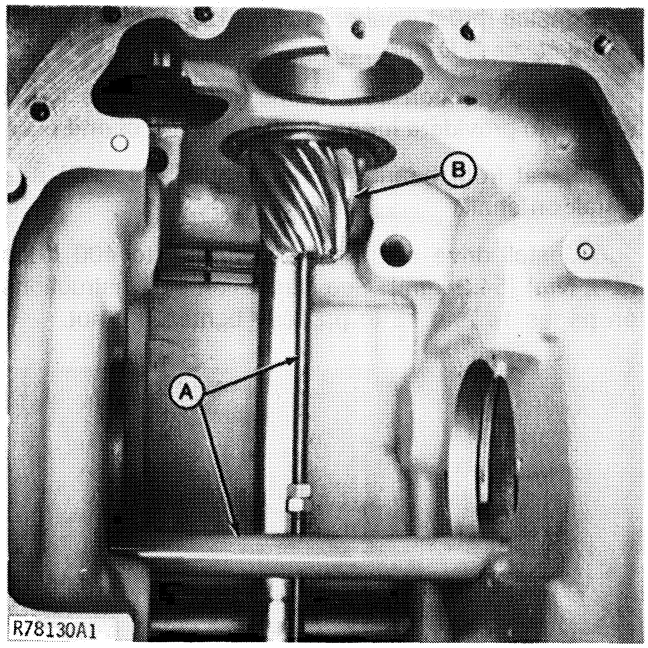

A—Holding Tool **B—Differential Drive Shaft**

Fig. 17-Installing Holding Tool

4. Install differential drive shaft (B, Fig. 17) through wall in case and hold in place with holding tool (A). Lock the two jam nuts together and tighten screw snugly against the pinion shaft.

5. Heat front bearing cone to 300°F (150°C) and install on differential drive shaft. Do not install shims at this time.

6. Install drive shaft nut and torque to 400 ft-lbs (542 Nm) (54.2 kgm). See illustration and instructions on page 12 to properly tighten the nut.

7. Strike each end of the drive shaft with a lead hammer to seat the bearing cups. Repeat several times to be sure the cups are properly seated.

8. Remove the drive shaft. Use a brass drift to drive the shaft through the front bearing cone.

Rolling Drag Torque Adjustment

IMPORTANT: Use a spring scale as directed below to obtain the specified rolling drag torque. The spring scale reading required to obtain the specified rolling drag torque is provided.

1. Clean the differential drive shaft and its parts from all nicks and burrs. Lightly oil the shaft bearings.

2. Install the differential drive shaft without gears in the case. Install holding tool (A, Fig. 17).

3. Install thrust washer (T, Fig. 15) at front of shaft with smaller O.D. forward.

4. Install enough front shims in front of the thrust washer to provide a measureable amount of end play.

5. Heat front bearing cone to 300°F (150°C) and install on shaft.

6. Install drive shaft nut and torque to 400 ft-lbs (542 Nm) (54.2 kgm). See illustration and instructions on pages 14 and 15 to properly tighten the nut.

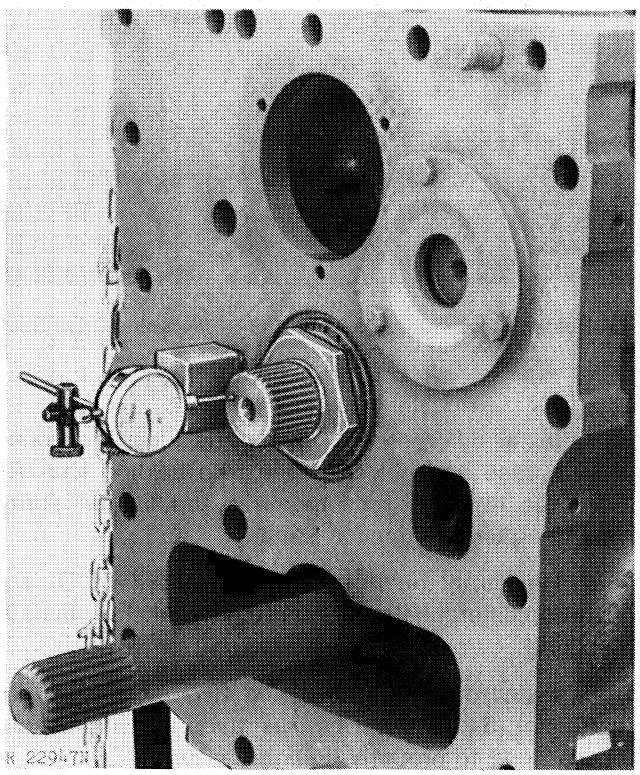

Fig. 18-Measuring Differential Drive Shaft End Play

7. Mount a dial indicator (Fig. 18) so extension rests on a smooth portion of the end of the differential drive shaft.

8. Mark the nut and the front of the transmission case so end play can be checked at the point on the differential drive shaft.

9. Grasp the pinion end of the shaft and rotate it several times in each direction while pushing forward on the shaft to seat the rear bearing rollers.

10. Align the mark on the shaft nut and the mark on the case and while pushing forward on the shaft, zero the dial indicator.

11. Rotate the shaft several times in each direction while pushing rearward to seat the front bearing rollers.

12. Align the mark on the nut and the case and while holding the shaft rearward, read the dial indicator. Note end play.

13. Remove the dial indicator and front bearing nut.

14. Using a large brass drift, drive the shaft rearward through the front bearing.

IMPORTANT: Use care not to lose any of the front bearing shims.

15. Remove enough front bearing shims to equal the end play measured plus 0.0000 to 0.0015 in. (0.000-0.038 mm) preload.

IMPORTANT: Nominal shim thicknesses are 0.003, 0.005, and 0.010 in. (0.076, 0.127 and 0.254 mm). Measure shims individually using a micrometer. Shim thicknesses may vary.

16. Install the differential drive shaft through the front thrust washer and install the shim pack determined in step 15.

17. Repeat steps 5 through 12.

a) If end play is measured, repeat steps 13 through 17.

b) If zero end play is determined, continue on through the following steps to check rolling drag torque.

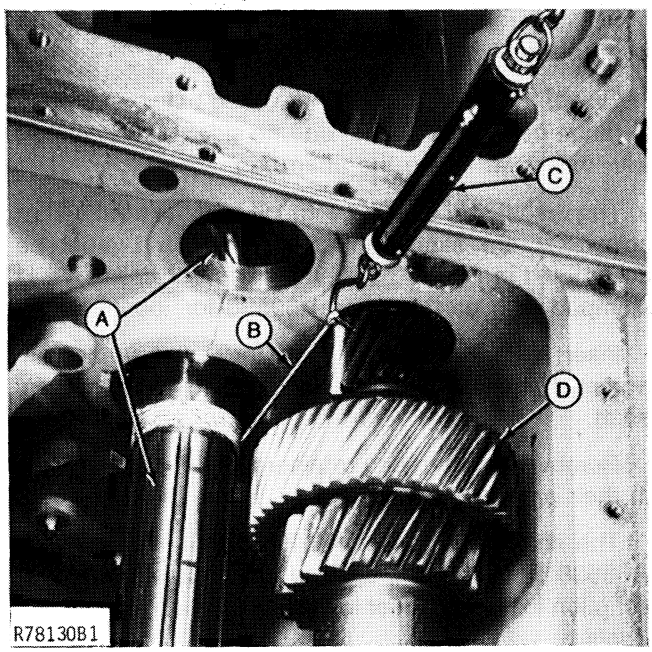

A—Differential Drive Shaft **C—Spring Scale**
B—String **D—Countershaft**

Fig. 19-Measuring Rolling Drag Torque Using Spring Scale

18. Tie a string (B, Fig. 19) (approximately 6 ft. [2 m] long) tightly around differential drive shaft just to the rear of the rear snap ring groove.

19. Rotate the shaft (A) to wrap the string around the shaft.

20. Attach a JDT-42 spring scale (C) (or its equivalent) to the end of the string. Be sure the spring scale is zeroed.

21. Raise the spring scale rotating the shaft a maximum of one revolution per second while reading the spring scale. Repeat several times for an accurate measurement.

a) If the spring scale reading is not within 7 to 13 lbs. (3.2-5.9 kg), repeat the entire adjustment. Be sure shaft components have no nicks, burrs or brass shavings.

b) If rolling drag torque is within specification, remove the shaft to complete the assembly and installation.

NOTE: The 7 to 13 lb. (3.2-5.9 kg) spring scale reading provides the specified rolling drag torque of 10 to 20 in-lbs (4.6-9.1 kg).

IMPORTANT: Do not lose or misplace the front bearing shims. If the shim pack is in question after assembly, the adjustment procedure and assembly procedure must be repeated.

Differential Drive Shaft Installation

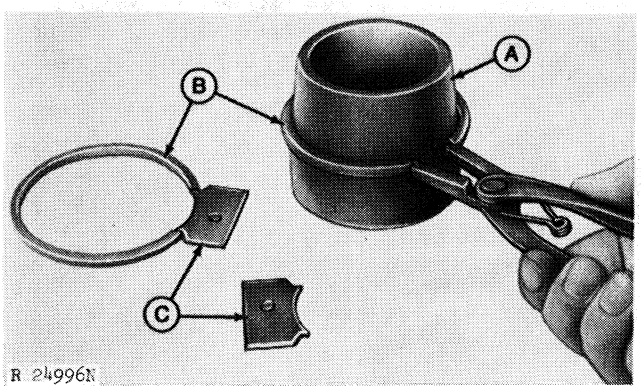

A—Expanding Cone **B—Snap Rings** **C—Retainers**

Fig. 20-Expanding Snap Rings

Before expanding the snap rings, grind off sharp ends of snap rings to avoid nuisance of retainers slipping out of snap rings.

Expand the snap rings (B, Fig. 20) for the differential drive shaft over the special cone JDT-10 (A). Use special snap ring retainers (C) JDT-3 to hold the snap rings open while they are being installed on the shaft.

IMPORTANT: Do not expand snap rings more than necessary to insert retainers. Rings may take a permanent "set" if they are expanded too far.

The differential drive shaft snap rings are of different thicknesses. The thickest ring is used at the rear of the shaft, the intermediate thickness ones in the center, and the thinnest at the front of the shaft. Install the front snap rings first. The rear and center snap rings then slide over the intervening grooves without dropping into the wrong grooves.

Differential Drive Shaft Installation—Continued

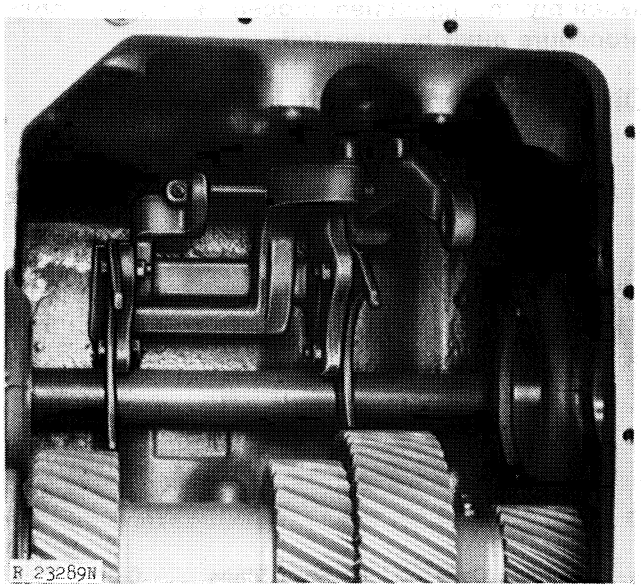

Fig. 21-Lower Shifter Positioned In Case

Before installing the differential drive shaft gears on the shaft, place the lower shifter assembly in the bottom of the transmission case (Fig. 21). It will be very difficult to install the shifter after the differential drive shaft is assembled.

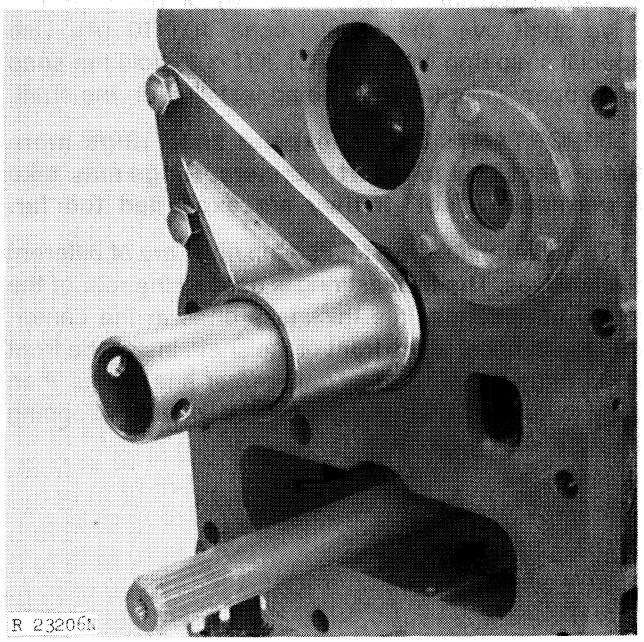

Fig. 22-Differential Drive Shaft Installation Tool

Install JDT-26 Installation Tool arbor on transmission case (Fig. 22). Referring to Fig. 15, insert dummy shaft in arbor bore and install differential drive shaft parts on dummy shaft in proper order. Insert a bar through the holes in the shaft to serve as a handle.

Install A-range gear in rear of case first, then work from the front of the case to the rear.

One of the two thrust washers used between B- and D-range gears has a relief on one side. Install washer with this relief facing the snap ring.

The rear shifter gear (G, Fig. 15) and the front shifter collar (Q) are similar in appearance and must be assembled in proper positions. The front collar (Q) is stamped with part number R59596 for identification.

Insert differential drive shaft through bearing cup and push the shaft into position, displacing the dummy shaft.

Remove the snap ring retainers and seat snap rings in their proper grooves.

The shaft holding tool (B, Fig. 23) is made with a R58538 Coupling and a piece of flat steel plate. Description for making tool is found in Group 40, Special Tools.

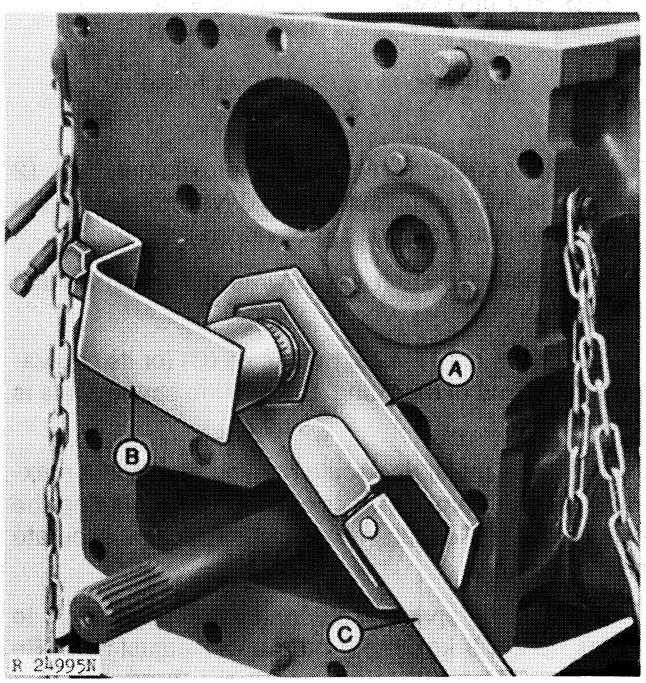

A—JDT-29 Wrench
B—Holding Tool
C—Torque Wrench

Fig. 23-Tightening Drive Shaft Nut

NOTE: It may be necessary to remove countershaft front bearing retainer to avoid interference with the JDT-29 Tool when tightening nut on drive shaft.

Heat front bearing cone in hot oil not to exceed 300°F (149°C) and install on shaft. Install nut on shaft and tighten to 400 ft-lbs (542 Nm) torque (refer to Fig. 23 for tool use). Use JDT-29 wrench.

NOTE: When using JDT-29 Wrench with a 35 to 45 in. (889-1143 mm) long torque wrench, set the torque wrench at 368 ft-lbs (500 Nm) (50 kgm) to obtain the proper torque specification. Torque wrench length is distance from center of handle to the center of the wrench drive. Be sure to keep the torque wrench parallel with the JDT-29 Wrench.

If the torque wrench is not 35 to 45 in. (889-1143 mm) long, use the formula given in Group 40, page 12 to derive the proper torque wrench setting when using the JDT-29 Wrench.

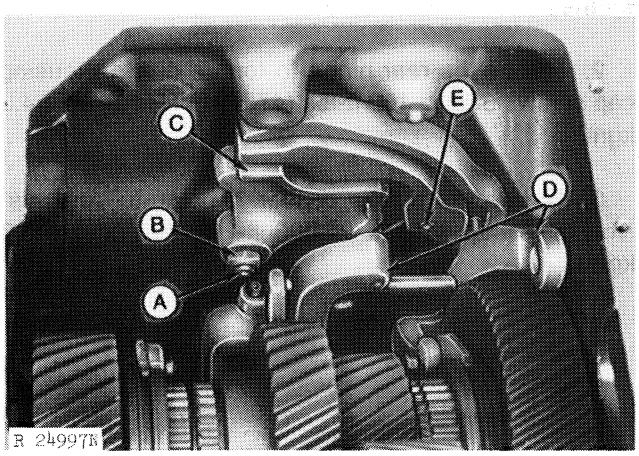

A—Cam Shaft
B—Lock Nut
C—Shifter Cam
D—Shifters
E—Spring Pin

Fig. 24-Installing Speed Range Shifters

If the speed range shifter cam spring has been removed, install spring with spring pin (E, Fig. 24). Be sure that long end of spring is facing hub of the cam.

Install speed range shifters (D) in grooves in shifter collars, and install shifter shaft. Install shifter cam (C) and insert shifter cam shaft (A) through case bore and cam. Align "V" mark on cam with "V" mark on end of shaft. Replace nut (B) on shaft and adjust shifter arm on shaft to give 0.002-0.007 in. (0.051 to 0.178 mm) end play in shaft.

IMPORTANT: Avoid leaving excessive end play in shifter cam shafts. Excessive end play will allow the shifter pawl detent springs to force the shifter cams out of proper operating position.

Transmission Drive Shaft Installation

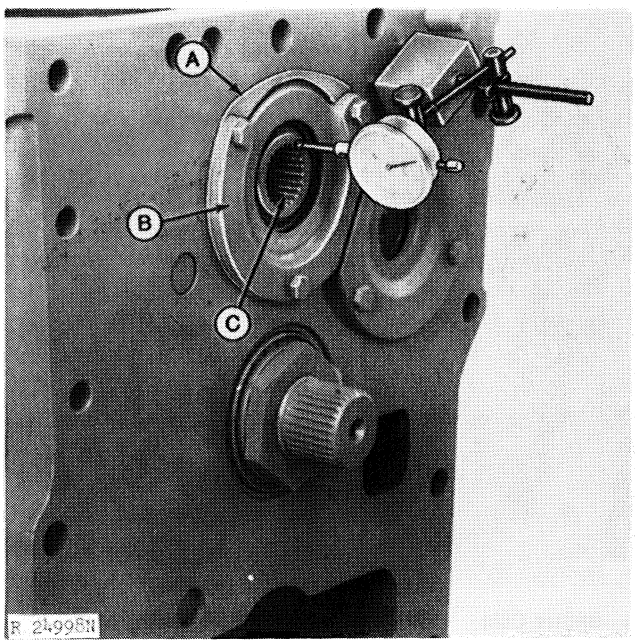

A—Shims
B—Bearing Retainer
C—Transmission Drive Shaft

Fig. 25-Measuring Transmission Drive Shaft End Play

Place transmission drive shaft in transmission case. Install front bearing retainer (B, Fig. 25) with shims (A). Place rear bearing cup in case so the cup protrudes approximately 1/4 in. (6 mm) from machined surface of case and draw into position with the oil pump body cap screws. Tighten cap screws to 20 ft-lbs (27 Nm) torque. Use a dial indicator with extension to check end play of transmission drive shaft (C). Correct end play is 0.004 to 0.006 in. (0.102 to 0.152 mm). Adjust, if necessary, by adding or removing shims under front bearing retainer.

Tighten transmission drive shaft front bearing housing-to-transmission case cap screws to 35 ft-lbs (47 Nm) torque.

Installing Shifters

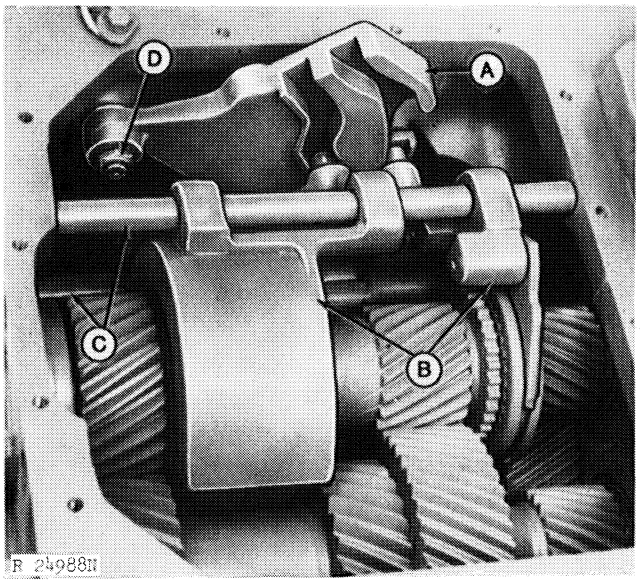

A—Shifter Cam
B—Shifters
C—Shifter Shafts
D—Lock Nut

Fig. 26-Speed Shifters and Cam

Install speed change shifters (B, Fig. 26) and shafts (C). Install shifter cam (A) with "V" marks on shaft and cam aligned. Replace nut (D) on shaft and adjust end play to 0.002 to 0.007 in. (0.051 to 0.178 mm).

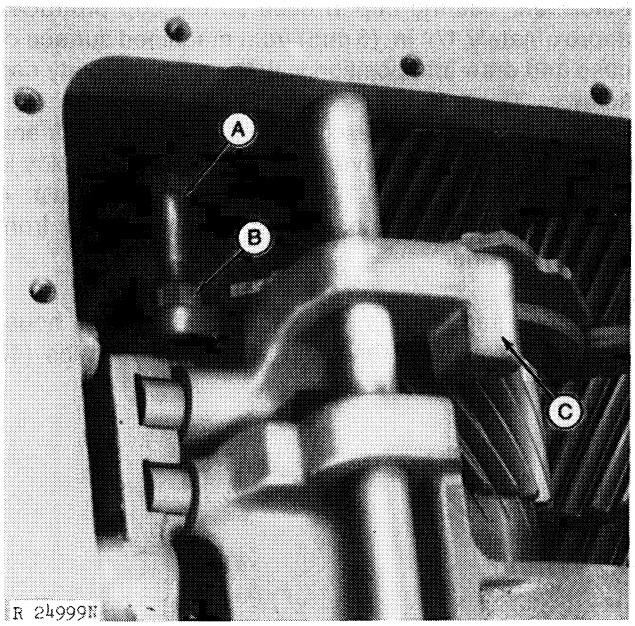

A—Adjusting Screw
B—Lock Nut
C—Reverse Range Shifter

Fig. 27-Adjusting Reverse Range Stop Screw

With speed range shifter cam in the low range detent position and the reverse range shifter roller against cam track, adjust screw (A, Fig. 27) until screw head touches transmission case wall. Shorten screw 1/2 turn and tighten lock nut (B) to 85 ft-lbs (115 Nm) torque.

Joining Torque Divider Housing To Transmission Case

1. Follow the special tightening instructions given in Group 25 of Section 10.

IMPORTANT: Align coupling on front end of differential drive shaft with splines on front drive shaft. Failure to properly align the coupling can cause damage to the power train. Therefore, when rolling tractor together raise one front wheel to allow the shaft splines to align with the coupling splines.

2. Torque the rear hinge-to-torque divider housing cap screws 350 to 400 ft-lbs (475-545 Nm) (47.5-54.5 kgm).

3. Torque the torque divider housing-to-transmission case cap screws to 300 ft-lbs (407 Nm) (40.7 kgm).

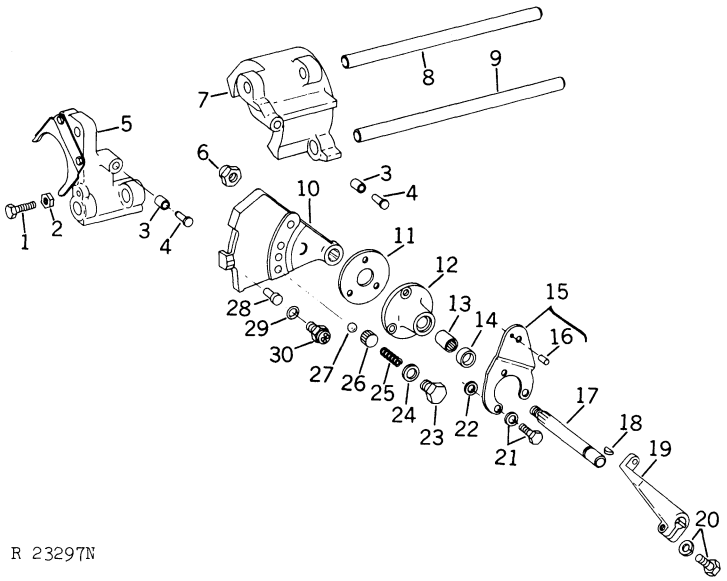

1—Cap Screw
2—Nut
3—Roller
4—Headed Pin
5—Reverse Shifter
6—Lock Nut
7—Low and High Shifter
8—Upper Shifter Shaft
9—Lower Shifter Shaft
10—Shifter Cam
11—Gasket
12—Camshaft Support
13—Needle Bearing
14—Oil Seal
15—Bracket
16—Spring Pin
17—Shifter Cam Shaft
18—Woodruff Key
19—Speed Selector Arm
20—Cap Screw/Lock Washer
21—Cap Screw/Lock Washer
22—Spacer
23—Spring Retainer
24—Aluminum Washer
25—Spring
26—Retainer
27—Detent Ball
28—Follower
29—Washer
30—Neutral-Start Switch

Fig. 28-Speed Change Shifter Parts

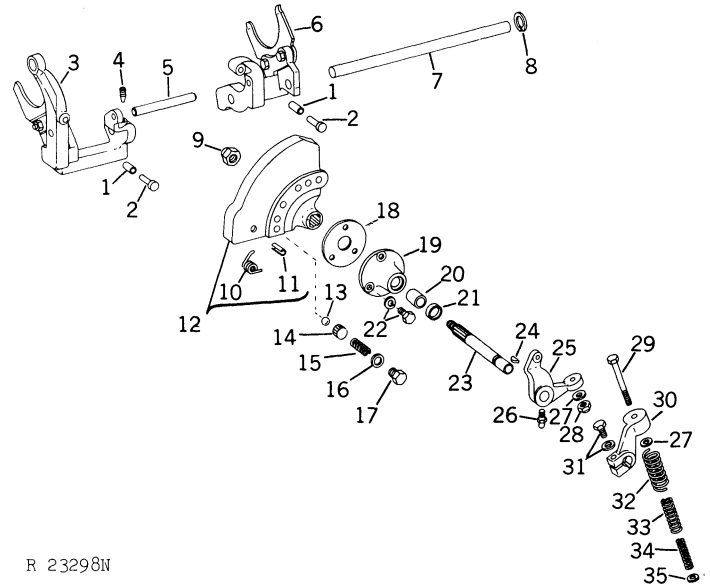

1—Roller
2—Headed Pin
3—A and D Range Shifter
4—Set Screw
5—Stabilizer Shaft
6—B and C Range Shifter
7—Shifter Shaft
8—Retaining Ring
9—Lock Nut
10—Spring
11—Spring Pin
12—Shifter Cam
13—Detent Ball
14—Retainer
15—Spring
16—Washer
17—Spring Retainer
18—Gasket
19—Camshaft Support
20—Needle Bearing
21—Oil Seal
22—Cap Screw/Lock Washer
23—Cam Shaft
24—Woodruff Key
25—Range Selector Arm
26—Grease Fitting
27—Washer
28—Lock Nut
29—Cap Screw
30—Park Release Arm
31—Cap Screw/Lock Washer
32—Spring
33—Spring
34—Spring
35—Washer

Fig. 29-Speed Range Shifter Parts

RANGE AND SPEED SELECTOR LEVER ASSEMBLY

Two designs are utilized on the range and speed selector lever assembly. Early model tractors are equipped with a rod and bellcrank assembly in and underneath the Sound-Gard Body. Shifter cables attached to the bellcrank and transmission shifter arms complete the design.

Later tractors use a one-piece shifter cable routed from the shifter levers, down through the floor plate, underneath the Sound-Gard Body, and to the transmission shifter arms on the transmission case.

These designs are covered separately on following pages. Also, two methods of repair can be used—one way is covered with the rod and bellcrank; the other with the one-piece cable assembly. Both ways can be used on either design.

Rod and Bellcrank Design (Early Tractors)

Removal and Repair

To remove the shift levers, first disassemble console. Remove the cap screws holding the sheet metal shield around console. Remove the load control knob. Remove the side panel from right side of Sound-Gard body by removing metal screws at top and back and removing handle (see Section 80, Group 5). Console cover cap screws can now be removed.

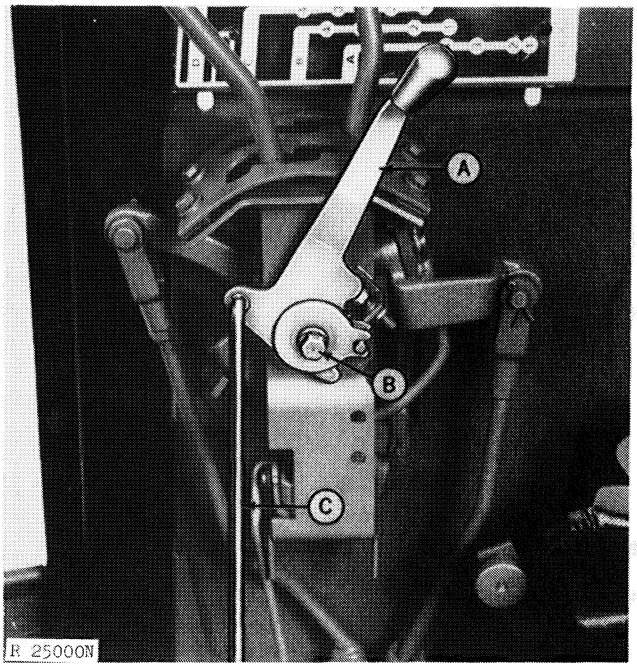

A—Throttle Control Lever
B—Friction Cap Screw
C—Throttle Control Rod

Fig. 30-Removing Throttle Control (Console Cover Removed)

Remove console metal shield. Disconnect the control rod (C, Fig. 30) from the throttle control lever (A) and remove the cap screw (B), spring, and retainer. Pull the lever up and out of the guide. The plastic lever guide may then be raised and supported by a wire, or it may be removed by first disconnecting the selective control and rockshaft levers.

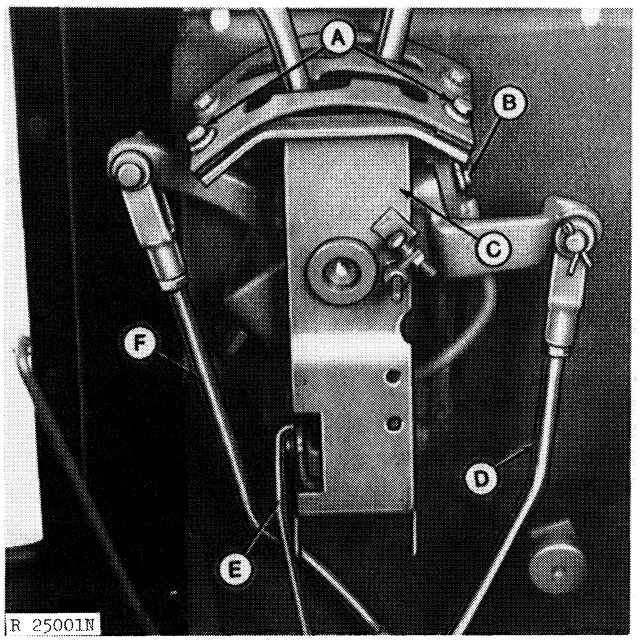

A—Cap Screws
B—Pivot Pin
C—Inner Support
D—Speed Shifter Rod
E—Two-Speed Shifter Rod
F—Range Shifter Rod

Fig. 31-Removing Inner Support

Disconnect two-speed control rod (E, Fig. 31). Remove two cap screws (A) at top of inner support (C) and two cap screws that attach inner support to outer support and remove inner support.

Disconnect speed change shifter rod (D) and remove speed selector pivot pin (B) to free speed selector lever and arm.

NOTE: Do not disturb shift lever guide plate unless necessary.

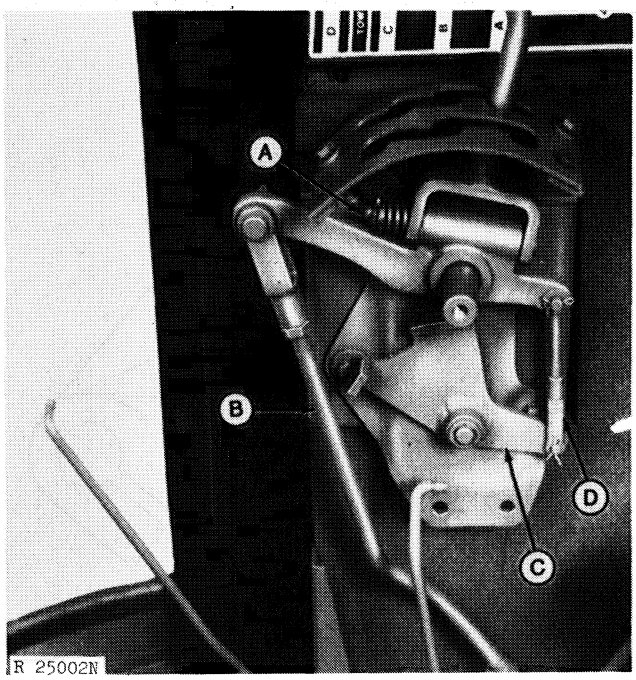

A—Pivot Pin
B—Range Shifter Rod
C—Lock-out Latch
D—Latch Rod

Fig. 32-Range Selector Shifter Rod

Disconnect range shifter rod (B, Fig. 32), lever pivot pin (A) and lock latch rod (D) to remove range selector lever and arm.

If removing the shifter console shifter rods, remove cap screws holding boot to floor and disconnect lower end of rods from pivot arm. Remove rods with boot from console.

If the speed change or speed range selector rods are replaced, the rod length needs to be adjusted properly to give a proper relationship of linkage when making final adjustment.

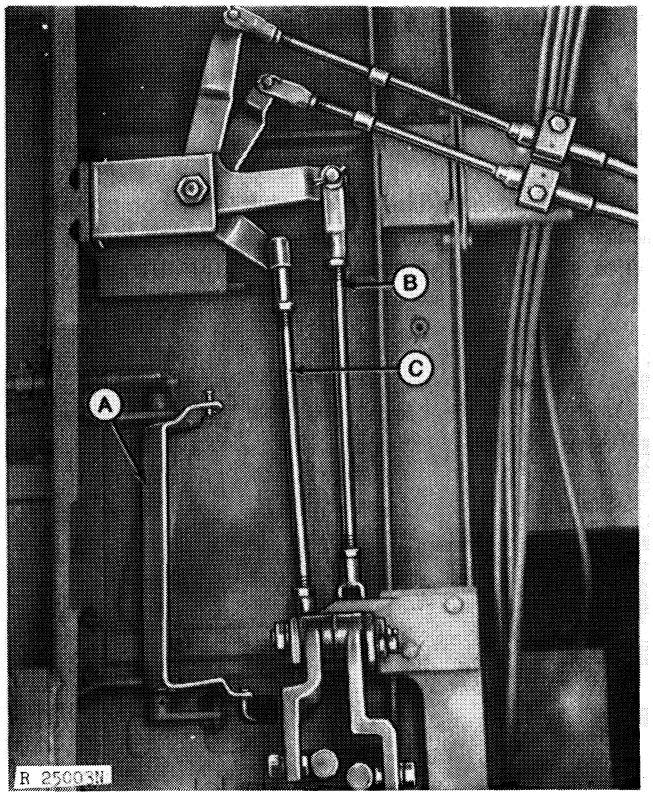

A—Two-Speed Shifter Bell Crank
B—Speed Selector Rod
C—Range Selector Rod

Fig. 33-Shifter Mechanism Underneath Sound-Gard

Adjust speed range selector rod (C, Fig. 33) to measure 15.71 to 15.91 inches (39.90 to 40.40 cm) from the centerline of the yoke hole to the centerline of the ball socket.

Adjust speed change selector rod (B, Fig. 33) to measure 16.75 to 16.95 inches (42.55-43.05 cm) between the centerline of the yoke pin holes.

If the console shifter rods are replaced, adjust the speed change rod to measure 21.28 to 21.49 inches (54.05 to 54.55 cm) between centerline of yoke and centerline of ball socket ball. The speed range rod length should be adjusted to 20.51 to 20.71 inches (52.10 to 52.60 cm).

Assembly and Adjustment

1. Install rods in their respective positions in the control console and to the pivot arms under the Sound-Gard body.

2. Assemble and install the shift lever components. Make sure that the three cap screws which fasten the outer support to the mounting structure are tight.

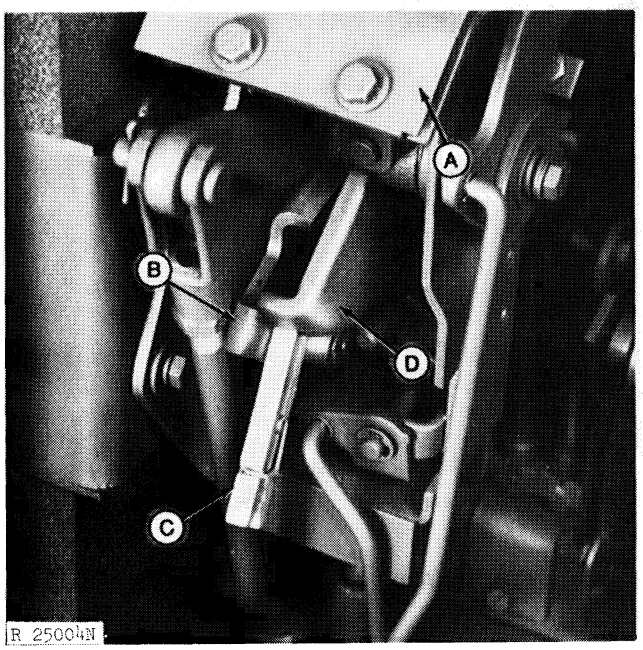

A—Guide Plate
B—Lock-Out Latch
C—Clothes Pin
D—Flange

Fig. 34-Centering Lock-Out Latch Tab

3. If the shift lever guide plate has been removed or requires readjustment, proceed as follows (proceed to item 4 if guide plate needs no adjustment):

a. Place the shift levers in the "neutral" and "park" positions. The long tab of the lock-out latch (B, Fig. 34) should be centered in the notch in the flange (D) of the speed selector lever arm. If not centered, remove the lock-out latch yoke pin, then center the tab in the notch by using a spring-type clothes pin (C). Position long end of clothes pin over lock-out latch tab and into the notch of speed selector flange.

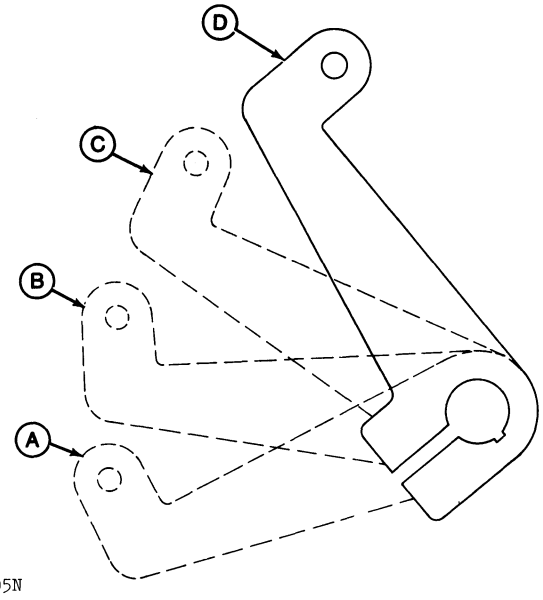

A—1R-2R Position
B—1-2 Position
C—Neutral Position
D—3-4 Position

Fig. 35-Speed Change Selector Arm Positions

b. With the clothes pin still in place, position the upper shifter arm on the side of the transmission case in the neutral detent position (C, Fig. 35). Adjust the yoke at transmission case shifter arm so the pin slides freely, then tighten the lock nut and install the cotter pin. Remove the clothes pin.

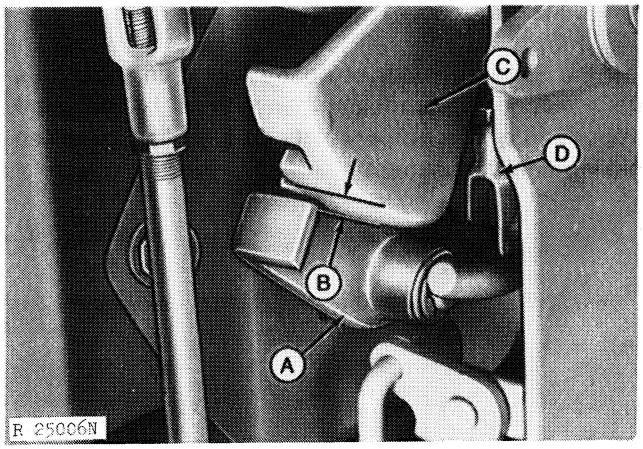

A—Lock-Out Latch
B—0.10 In. (2.5 mm)
C—Speed Selector Flange
D—Latch Rod Yoke

Fig. 36-Adjusting Lock-Out Latch Clearance

c. Place the range selector lever in A-range and the speed selector lever in position 1 or 2. Adjust the yoke on the lock-out latch rod to provide 0.10 in. (2.5 mm) clearance between latch tab and outer radius of the speed selector lever arm (Fig. 32). Install yoke pin.

d. Place the speed change lever in the 1st or 2nd speed position. Position the guide plate so the lever is centered front-to-rear in the 1-2 slot and the outer edge of the guide plate is flush with the edge of the plastic spacer (where used) or fender wall. Tighten the guide plate screws.

4. If the guide plate needs no adjustment, place the upper shifter arm on the side of the transmission case in the 1-2 speed detent position (Fig. 35). Adjust the cable yoke until the speed selector lever is centered in the 1-2 slot.

5. Drop the plastic lever guide down over the shift levers and guide plate. Install the throttle lever, friction plates, washers, spring and guide. Tighten the throttle lever friction spring screw until an 8 lb. (35.6 N) pull on the knob is required to move the lever. Make sure that the anchor pin in the inner support passes through the tangs of the friction plates.

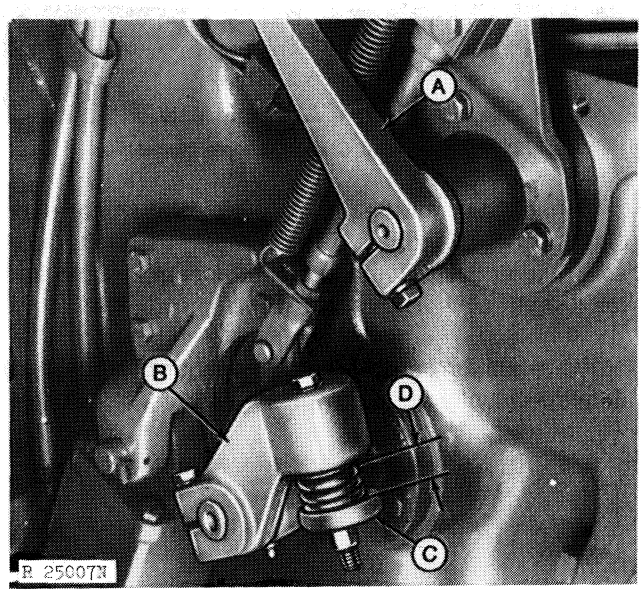

A—Speed Selector Arm
B—Park Release Arm
C—Range Selector Arm
D—0.90 in. (22.9 mm)

Fig. 37-Park Release Spring Adjustment

6. Adjust the park release spring on the speed range shifter arm (C, Fig. 37) on the transmission case by adjusting nut to 0.90 inch (2.28 cm) (D) between spring pad on range shifter arm and open end of spring cup on park release arm (B).

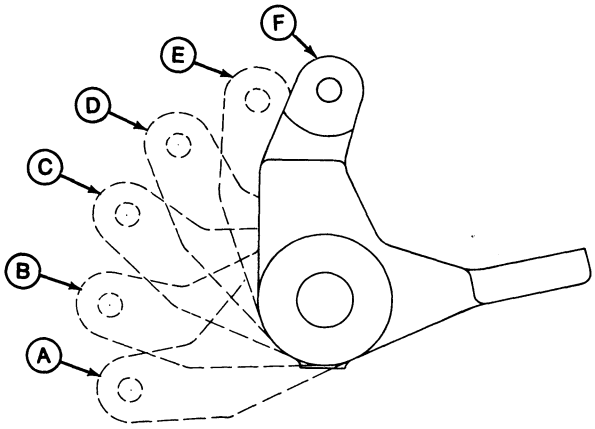

A—D-Range
B—Tow Position
C—C-Range
D—B-Range
E—A-Range
F—Park Position

Fig. 38-Speed Range Selector Arm Positions

7. Place the lower shifter arm on the side of the transmission case in the B-range detented position (D, Fig. 38). Adjust the rod by rotating the yoke at control console or transmission case shifter arm until pin can be installed freely and range selector lever is centered in B-range position. Lock jam nut.

8. Install selective control valve and rockshaft levers. Fasten the control lever guide to the fender with three cap screws. When tightening the guide cap screws, check to see that the control lever guide is aligned with the guide plate. The speed selector must contact the steel guide plate, not the plastic lever guide.

9. Install side panel and side handle. Install console cover after all adjustments are finished.

One-Piece Cable Design (Late Tractors)

Removal

The one-piece cable design uses cables which extend from the control console shifter arms to the arms on the side of the transmission case. Adjustment can usually be made at the transmission case shifter arms without disassembling the control console.

Should repair of the console shifter mechanism become necessary, the right handle and side panel must be removed from the Sound-Gard body. Refer to Section 80, Group 25 for removal procedures.

Remove cap screws from console cover and remove cover. Remove the cap screws holding the control lever guide and pull cover up out of way. Secure with a small piece of wire.

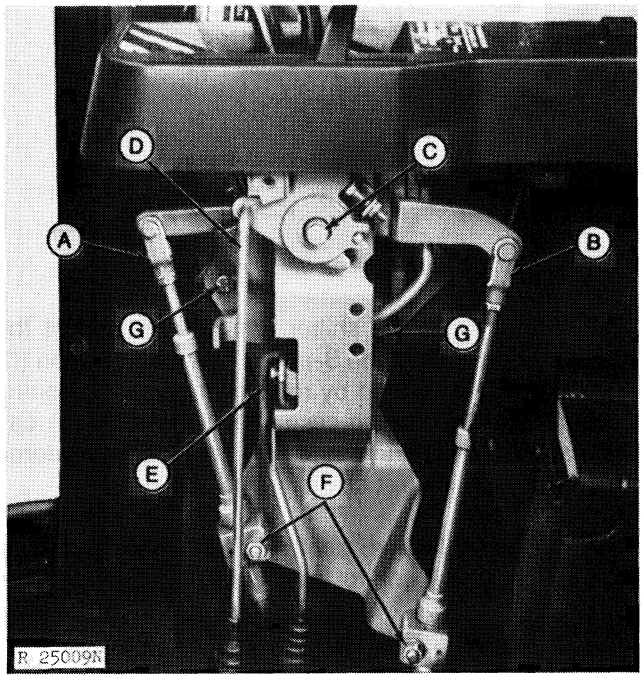

A—Range Selector Cable Yoke
B—Speed Selector Cable Yoke
C—Friction Cap Screw
D—Throttle Control Rod
E—Two-Speed Control Rod
F—Cable Clamps
G—Cap Screws

Fig. 39-Shifter Console With Cover Removed

Disconnect the throttle control rod (D, Fig. 39) from throttle control lever. Remove throttle control lever friction adjusting cap screw (C) and remove arm and related parts from console.

Disconnect range selector cable yoke (A) and speed selector cable yoke (B) from respective arms.

Disconnect two-speed planetary control rod (E) from console.

Remove the two cable housing clamps (F) from console support. Remove the console support cap screws (G) from mountings. A third cap screw is installed from the outside wall of Sound-Gard body.

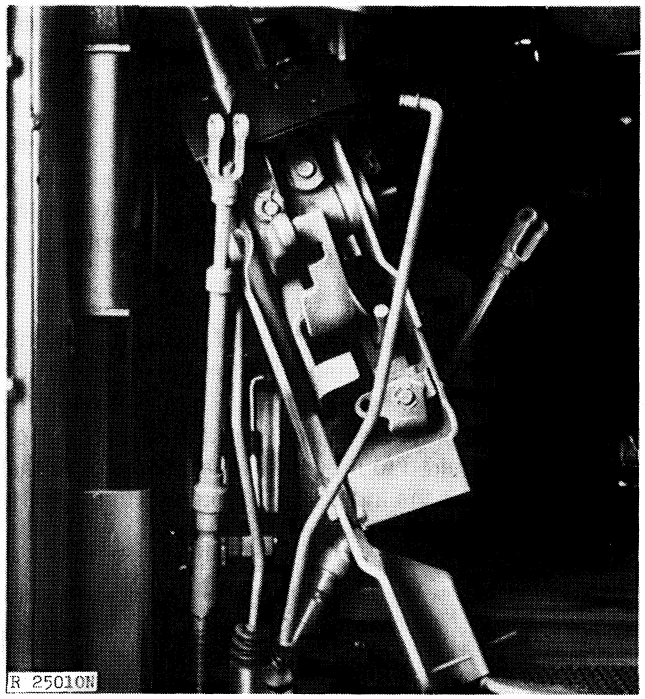

Fig. 40-Removing Shifter Console Mechanism

Console can now be removed. Position shifter levers close together and pull down through the shifter console guide cover. Remove shifter assembly from tractor.

Place shifter console in a vise with console positioned vertically as shown in Fig. 41.

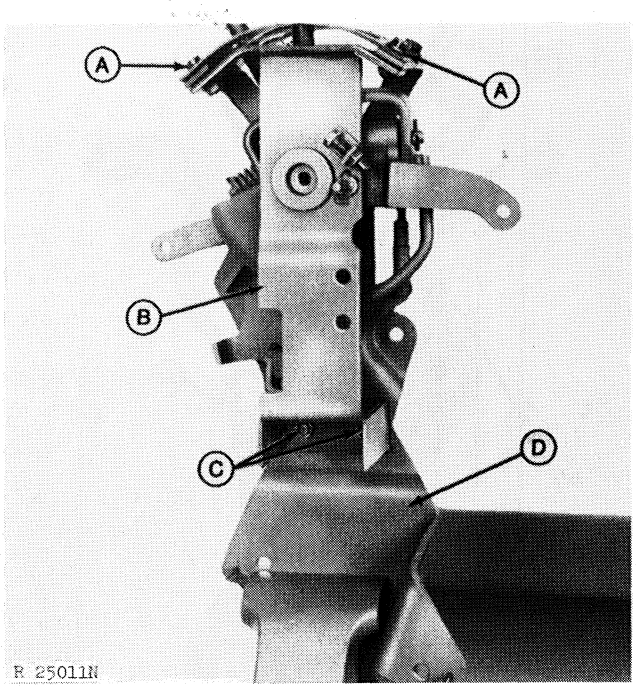

A—Guide Plate Screws
B—Inner Support
C—Lock Nuts And Cap Screws
D—Lower Bracket

Fig. 41-Removing Inner Support

Back out the two guide plate cap screws (A, Fig. 41) far enough to allow inner support (B) to be removed. Catch nuts underneath guide plate as cap screws are removed.

Remove the two cap screw nuts (C) that attach the lower support bracket (D) to the inner support. As cap screws are removed, shifter assembly will fall unless held.

Remove inner support and lower support from shifter assembly and place shifter assembly in vise in a vertical position (Fig. 42).

Repair

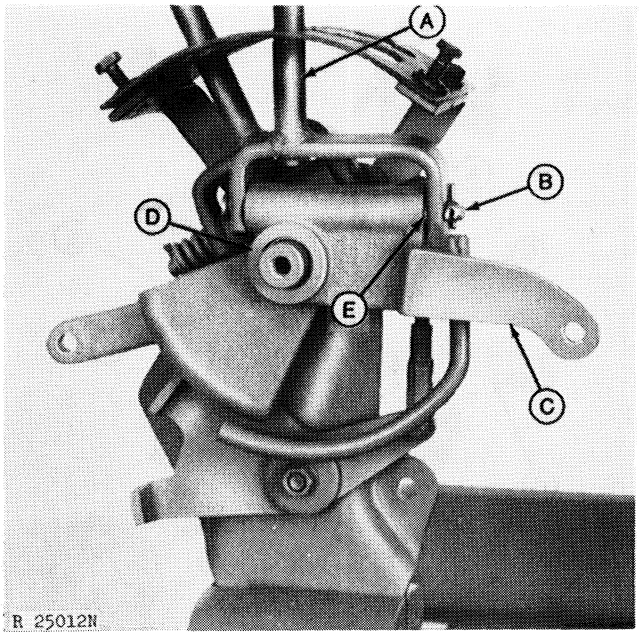

A—Shifter Lever
B—Pivot Pin
C—Shifter Arm
D—Thrust Washer
E—Spring

Fig. 42-Removing Speed Shifter Arm

When replacing shifter arm (C, Fig. 42), shifter lever (A), or bushing in shifter arm, remove cotter pin in pivot pin (B) and remove pivot pin. Pull lever up to separate from arm and pull arm off shaft. (Catch spring in shifter arm when lever is removed.)

Inspect bushing in shifter arm. I.D. of bushing is 0.8760 to 0.8770 inch (22.250 to 22.276 mm). If bushing is replaced, drive new bushing into arm until bushing is same distance from each side of arm bore.

Repair—Continued

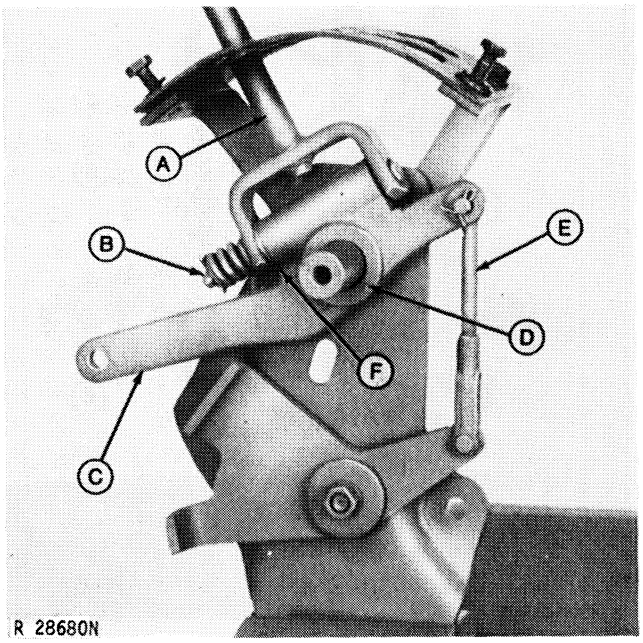

A—Range Selector Lever
B—Pivot Pin
C—Range Selector Arm
D—Thrust Washer
E—Lock-Out Latch Rod
F—Facing

Fig. 43-Removing Range Shifter Arm

After speed selector arm is removed, the range selector arm will be exposed. Disconnect lock-out latch rod (E, Fig. 43) from range selector arm (C). Remove cotter pin from end of pivot pin (B) and remove pivot pin. (Catch spring on pivot pin when cotter pin is removed.) Pull lever up and remove arm.

The bushing in the range selector arm is the same as the bushing in speed selector arm. Press new bushing into arm until bushing is centered in bore.

ASSEMBLY

When assembling shifter mechanism, be sure a thrust washer is installed between outer and inner supports and arms and between arms. Install the facing (F, Fig. 43) between range selector pivot arm (C) and shifter lever (A).

Install shim washers (D, Fig. 45) between thrust washer and spacer as necessary to obtain 0.002 to 0.020 inch (0.05 to 0.50 mm) end play. Do not use more than three shim washers.

Install inner support and lower support bracket and place lower bracket in vise to hold assembly vertical (Fig. 44).

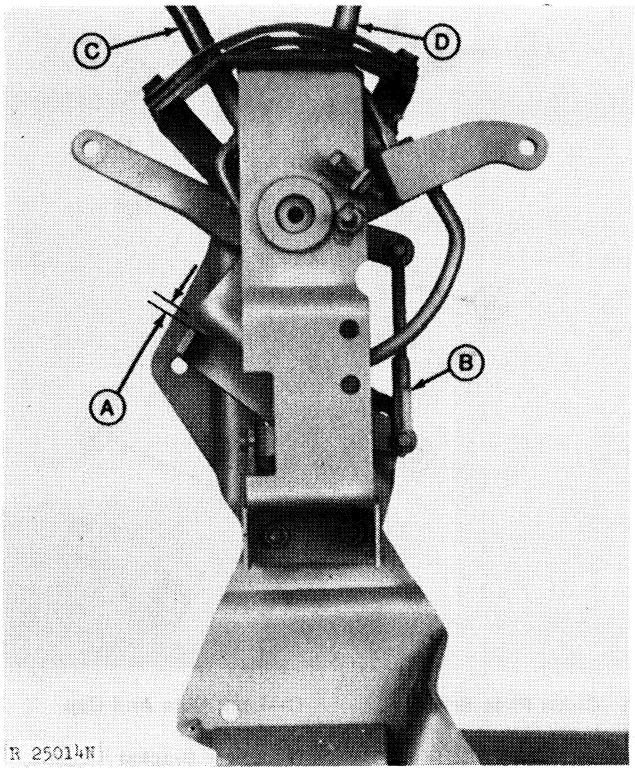

A—0.10-in. (2.5 mm) Clearance
B—Lockout Latch Rod Yoke
C—Speed Selector Lever
D—Range Selector Lever

Fig. 44-Adjusting Lock-Out Latch Tab Clearance

After shifter mechanism is assembled (Refer to Fig. 45), adjust the lock-out latch tab clearance between tab and speed shifter arm flange.

Place speed selector lever (C, Fig. 44) in position 1 or 2. Place range selector lever (D) in the A-range position. Disconnect lock-out latch rod yoke (B) and adjust until there is 0.10-inch (2.5 mm) clearance (A) between tab and flange and pin slips in yoke freely. Install pin and cotter pin.

Install shifter mechanism in Sound-Gard body. Connect shifter cable yokes to their respective shifter arms. Install clamps on shifter cable housing holding housings to lower bracket. Connect two-speed operating rod.

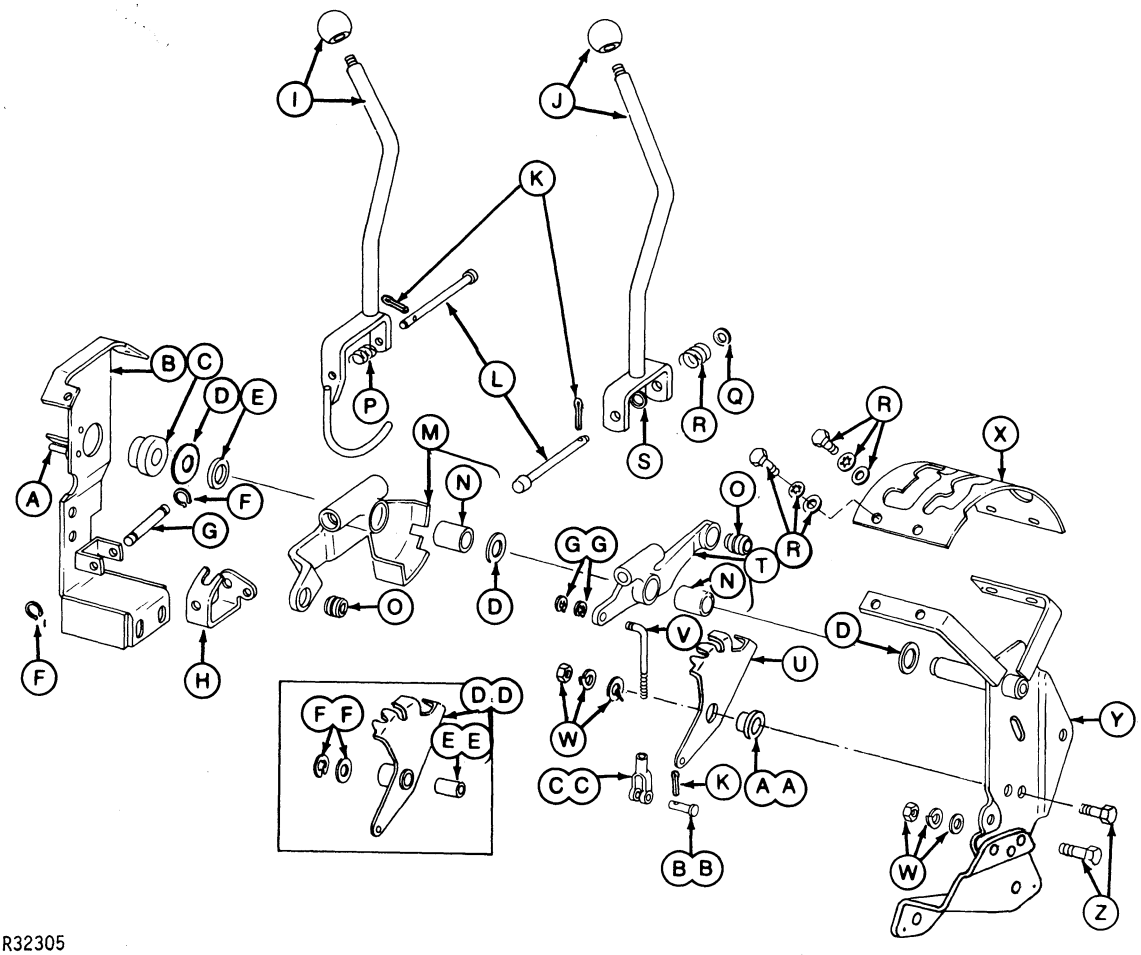

A—Stop In
B—Inner Support
C—Spacer
D—Shims
E—Thrust Washer
F—Retaining Ring
G—Pin
H—Upper Bell Crank
I —Speed Selector Lever
J —Range Selector Lever
K—Cotter Pin
L—Headed Pin
M—Speed Selector Arm With Bushing
N—Bushing
O—Bushing
P—Spring
Q—Washer
R—Screw With Washers
S—Facing
T—Range Selector Arm With Bushing
U—Lock Out Latch*
V—Rod
W—Nut and Washers
X—Guide Plate
Y—Outer Support
Z —Cap Screw
AA—Bushing
BB—Pin
CC—Yoke
DD—Lock Out Latch (Late)
EE—Bushing
FF—Snap Ring and Washer
GG—Retaining Rings

Fig. 45-Shifter Console Parts

NOTE: Asterisk (*) in Fig. 45 indicates parts used on later tractors only. Early tractors use the parts shown in the box. Later tractors are 8430 (1340-) and 8630 (1715-).

Repair—Continued

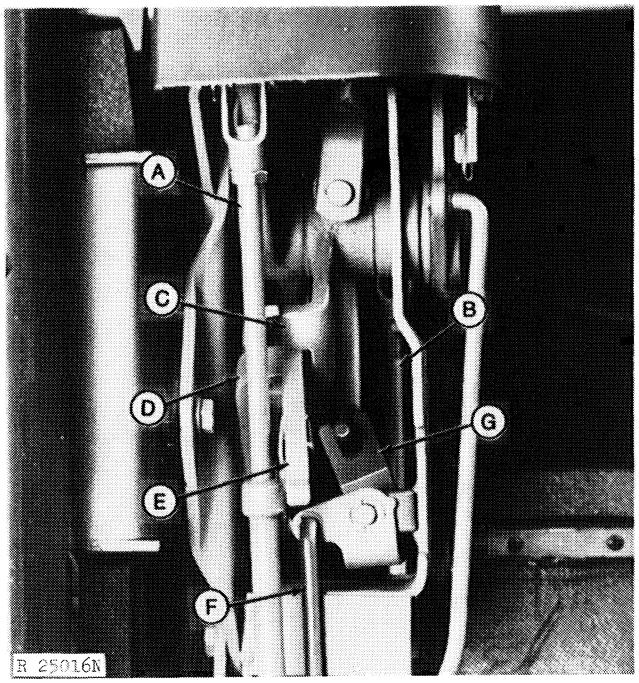

A—Range Selector Cable
B—Speed Selector Cable
C—Speed Selector Arm
D—Lock-Out Latch Tab
E—Clothes Pin
F—Two-Speed Operating Rod
G—Two-Speed Bell Crank

Fig. 46-Centering Lock-Out Latch Tab

Place the speed selector lever in "neutral" and the range selector lever in "park" positions. The lock-out latch tab should be centered in the speed selector arm flange notch. Place a spring-type clothes pin with the long portion of clothes pin fitting over the lock-out latch tab and inserted into the notch in the speed selector arm. (It may be necessary to cut or grind off the long ends of clothes pin to make the ends thinner.)

If tab is not centered in notch, disconnect the range selector cable and the speed selector cable from either the console shifter arms or the transmission case shifter arms.

With the speed selector lever in the "neutral" position, place the upper shifter arm on the transmission case in the "neutral" detent position (C, Fig. 35).

With the range selector lever in "park" position, place the lower shifter arm on the transmission case in the "park" detent position (F, Fig. 38).

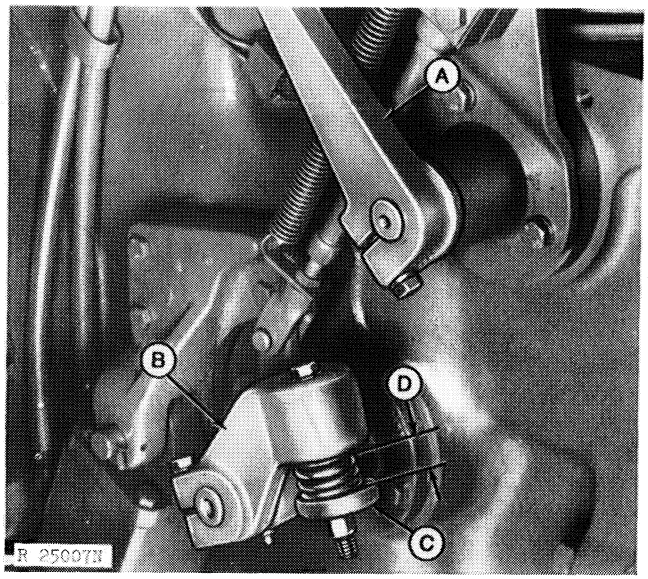

A—Speed Selector Arm
B—Park Release Arm
C—Range Selector Arm
D—0.90 in. (22.9 mm)

Fig. 47-Park Release Spring Adjustment

Adjust park release spring on the range shifter arm (C, Fig. 47) by adjusting nut underneath arm until 0.90 inch (22.9 mm) dimension (D) is obtained between shifter arm and park release arm (B).

Place shifter arm into D-range position (A, Fig. 38). If interference occurs, adjust distance between arms (B and C, Fig. 47) until shift can be made without interference.

With the upper shifter arm on the transmission case still in the "neutral" detent position, adjust the yoke on cable so pin slides in freely. Install pin and cotter pin. Lock yoke nut.

Place the lower shifter arm on the transmission case in the B-range position (D, Fig. 38). Place the range selector lever in the B-range position. Adjust yoke on range selector cable until pin slides in freely. Install pin and cotter pin. Lock yoke nut.

Install console panel and cover. Install panel and handle on outside of Sound-Gard body.

Install hi-lo control linkage and adjust as instructed in Group 10, page 18.

On both designs make these checks after assembling tractor shifter assembly:

1. Shift through all gears. Shifts should be relatively smooth without interference.

2. Place lever in "N" and "P" position. Speed selector lever should not be shifted out of "N".

3. Place speed selector lever in 1R. Speed change lever should not be shifted into C or D-range.

4. Place speed range selector lever in C or D-range. Speed change lever should not be shifted into 1R.

TRANSMISSION PUMP

General Information

The transmission charge pump is located in the transmission case and driven at engine speed by the transmission drive shaft.

The pump is a constant displacement, external gear type pump (see FOS Manual-10, "Hydraulics") and is used to lubricate the transmission and torque-divider.

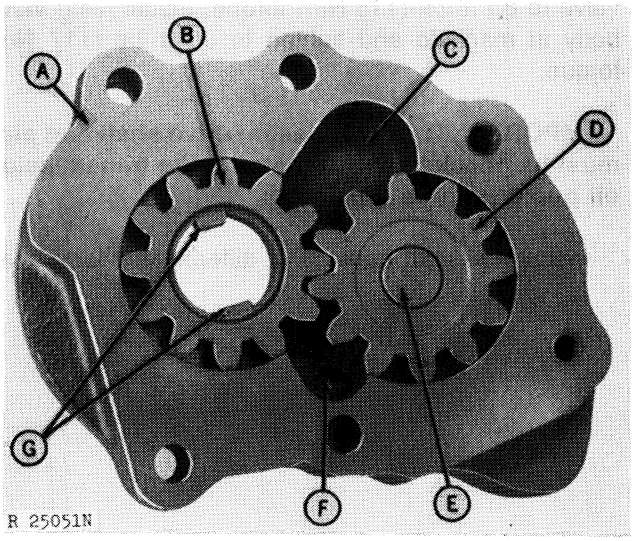

A—Pump Body
B—Drive Gear
C—Inlet Port
D—Idler Gear (with Bushing)
E—Idler Shaft
F—Outlet Port
G—Drive Lugs

Fig. 48-Transmission Oil Pump Gears

The meshing drive (B, Fig. 48) and idler (D) gears lift the oil from the reservoir into the pump. As the teeth of the gears come together, the oil is forced into the discharge outlet port (F) of the pump.

Diagnosing Malfunctions

Low or No Transmission Pump Output
- Pump drive gear worn or damaged
- Pump drive shaft damaged
- Pump housing damaged or leaking
- Pump intake screen plugged

Removal

Remove the rockshaft housing or differential case cover. Remove the pump and its parts as instructed on page 3 of this Group.

Repair

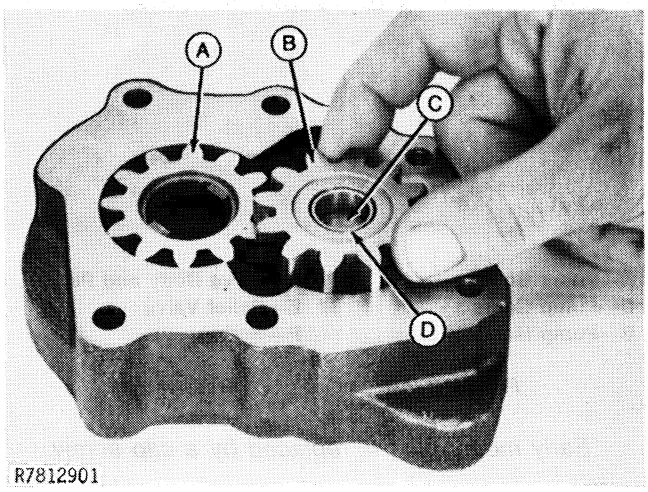

A—Drive Gear
B—Idler Gear
C—Dowel Pin
D—Bushing

Fig. 49-Pump Body Assembly

After disassembling pump, examine the gears (B, Fig. 49) for wear, chipped or broken teeth, and examine the gear bore for scoring. Damage to the pump is usually due to contamination of oil or lack of oil.

O.D. of both gears is 2.082 to 2.084 inches (6.347 to 6.353 cm). Thickness of both gears is 0.6225 to 0.6235 inch (2.052 to 2.055 cm). Clearance between pump body and gears is 0.003 to 0.005 inch (0.08 to 0.13 mm). Clearance between gears and pump cover is 0.0017 to 0.0043 inch (0.043 to 0.109 mm).

Repair—Continued

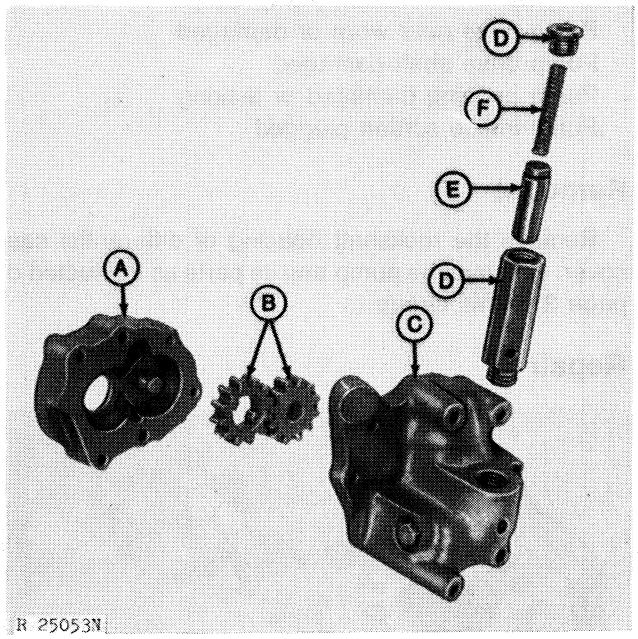

A—Pump Body
B—Pump Gears
C—Pump Manifold
D—Valve Body and Plug*
E—Relief Valve
F—Spring

Fig. 50-Transmission Pump Disassembled

**Early model plug is replaced by a cap screw.*

Check drive lugs in I.D. of drive gear and drive slots in transmission pump drive shaft. Lug thickness is 0.2834 to 0.2934 inch (7.198 to 7.452 mm). O.D. of the transmission drive shaft at gear is 1.001 to 0.0016 inch (25.43 to 25.44 mm). The I.D. of drive shaft bore in the pump housing is 1.0035 to 1.0045 inch (25.49 to 25.51 mm). I.D. of idler gear bushing is 0.626 to 0.628 inch (15.90 to 15.95 mm).

Check to make sure cover is flat within 0.0010 inch (0.025 mm).

Check relief valve spring (F) for distortion or breaks. Approximate free length should be 3.15 inch (80 mm). With 19 to 23 lbs. (84.5 to 102.3 N) compressive load, length should be 1.58 inch (40.1 mm).

O.D. of relief valve (E) is 0.6645 to 0.6655 inch (16.88 to 16.90 mm).

Install idler and drive gear in housing and tighten cover cap screws to 21 ft-lbs (28 Nm) torque. Install transmission oil pump pressure switch line.

Tighten relief valve body cap screw after installing valve to 85 ft-lbs (115 Nm) torque. Install relief valve body in manifold and tighten to 85 ft-lbs (117 Nm) torque.

IMPORTANT: Transmission drive shaft end play must be checked and adjusted if the transmission oil pump body is replaced.

Install rockshaft housing or differential case cover.

Group 30
DIFFERENTIALS AND DRIVE SHAFTS

DIFFERENTIALS

GENERAL INFORMATION

The rear differential is housed in the rear compartment of the transmission case. Its purpose is to route the power from the differential drive shaft to the rear wheel through a bevel pinion mechanism.

The differential is comprised of a pinion and ring gear, a differential housing to which the ring gear is attached, and a bevel pinion assembly located in the differential housing.

The front differential, positioned in its own case, is located underneath the front of the engine. A differential drive shaft attached to the front differential pinion shaft by a coupler receives power from the front differential drive shaft by means of a telescoping U-joint located in the hinge.

Lubrication is provided by a "splash" method by the ring gear picking up oil from the reservoir and depositing it on the differential parts.

Refer to FOS Manual 40 - POWER TRAINS, Chapters 1 and 7 for a more thorough explanation of the differential operation.

Hydraulic Differential Lock

Differential speed causes traction loss when one wheel is slipping. An optional hydraulic lock uses pressure oil to lock up the rear differential.

When the lock pedal is depressed, oil flows to the differential. A piston-clutch arrangement locks the bevel pinions to the differential housing. See Fig. 1 for reference illustration of lock operating circuit.

When the pedal is released, oil pressure at the piston is shut off, releasing the clutch.

DIAGNOSING MALFUNCTIONS

Differential Noisy At All Times

Ring gear and pinion adjustment incorrect
Ring gear or pinion damaged
Quill or pinion shaft bearings damaged

Differential Not Working Freely While Turning

Bevel pinions and shafts damaged
Bevel pinion bearing surfaces damaged

Differential Lock Not Functioning

Lock Valve pressure setting low
Plunger or control valve spring weak
Leaking oil seals or gasket
Worn clutch disks

Litho in U.S.A.

Differential Lock—Continued

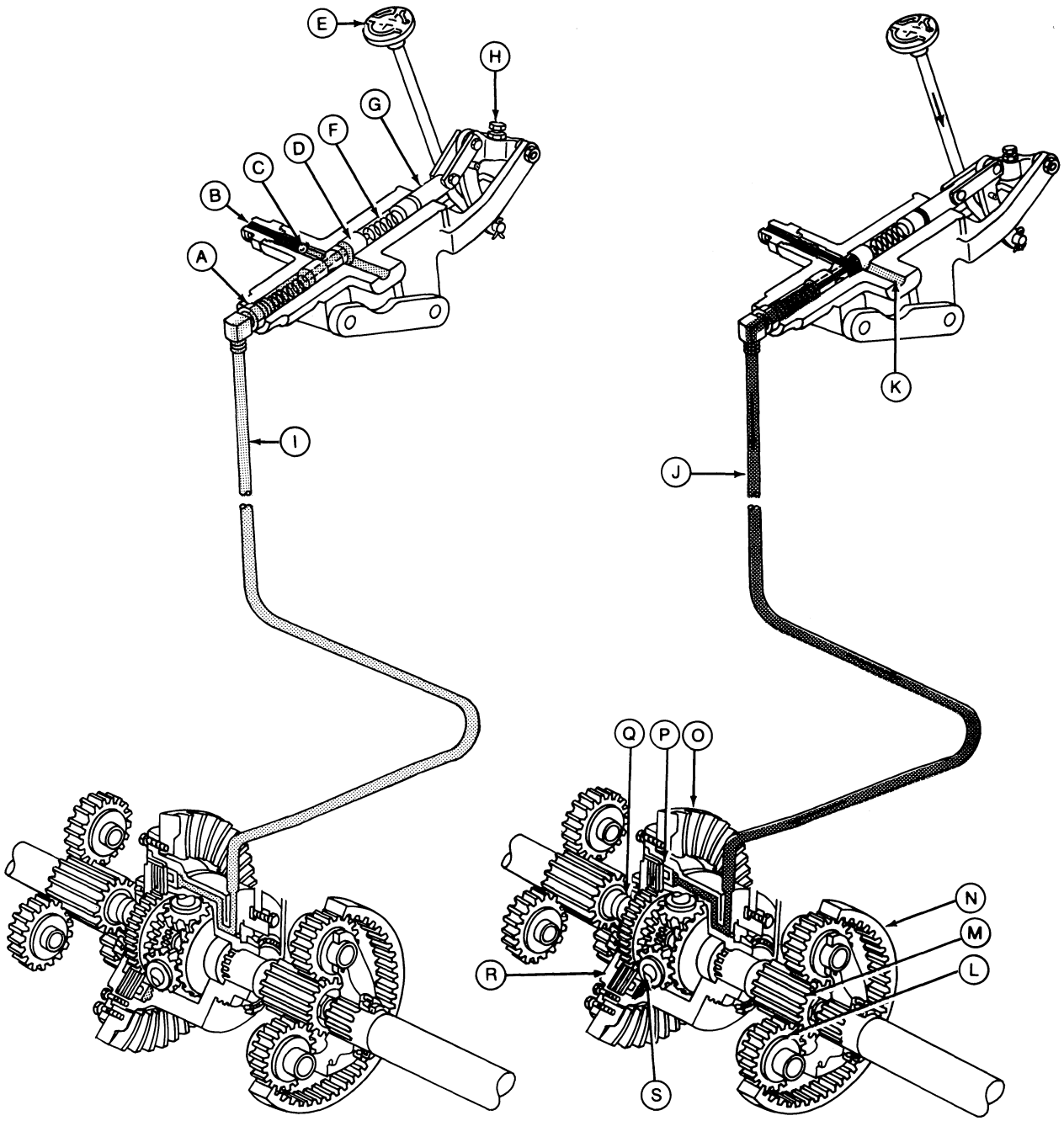

R32306C

Fig. 1-Differential Lock Oil Flows (4-pinion differential shown)

REAR DIFFERENTIAL

Removal

Disconnect necessary oil lines to remove rockshaft housing and remove rockshaft.

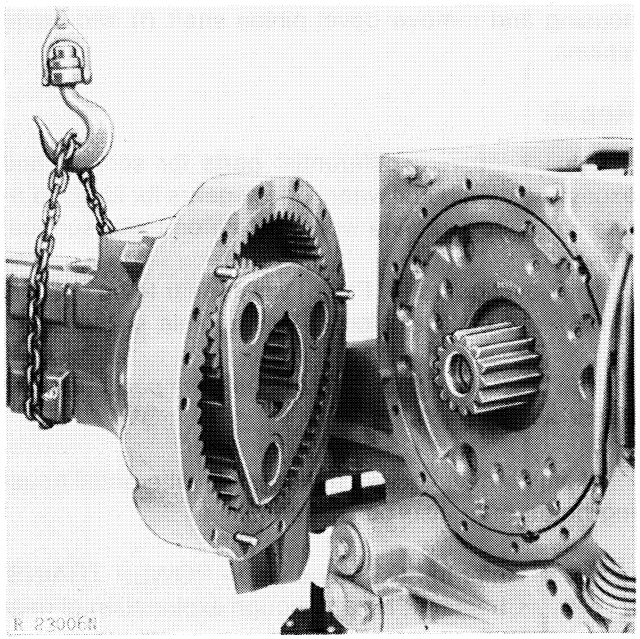

Fig. 2-Removing Final Drive

Raise rear of tractor and remove both wheels and final drive units (Fig. 2).

CAUTION: Be sure to observe all safety precautions when working with hoist.

Remove the brake backing plate, brake disks, and sun pinions.

Remove the transmission oil pump line to the pressure switch and remove oil pump. (See Group 25).

If equipped with optional differential lock, remove differential lock oil line.

Rotate the differential housing until the flat sides of the housing are vertical. Wrap chain around differential housing and lift differential with hoist enough to relieve weight on bearing quills.

Remove six cap screws attaching bearing quills to case and remove quills. DO NOT damage the bearing shims for the quills. Keep shims with their respective quills. Wrap a small chain or piece of wire around the short end of the differential housing and attach to chain to keep differential housing from tipping when differential is hoisted out of case. Lift differential from case.

A—Spring
B—Valve Inlet
C—Check Ball
D—Control Valve
E—Pedal
F—Spring
G—Plunger
H—Adjusting Screw
I —Lock Disengaged
J —Lock Engaged
K—Return
L —Planetary Pinion
M—Sun Pinion
N—Ring Gear
O—Spiral Ring Gear
P—Lock Piston
Q—Bevel Lock Gear
R—Lock Clutch
S—Bevel Pinion (2 used)
System Pressure Oil
Lock Pressure Oil
Pressure Free Return Oil

Legend For Fig. 1

Litho in U.S.A.

REAR DIFFERENTIAL—Continued

NOTE: When repairing differential with no lock, disregard any reference to differential lock components.

Disassembly

Remove differential cover cap screws and lift housing cover (A, Fig. 3) off differential housing. Be careful not to lose the three small springs (B) which are mounted in the inner side of the differential cover.

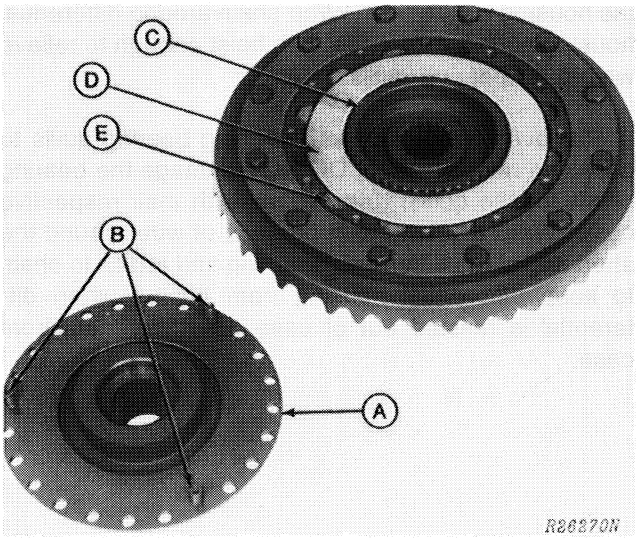

A—Cover
B—Return Springs
C—Bevel Lock Gear
D—Disks
E—Plates

Fig. 3-Differential Housing Cover

Remove splined differential bevel lock gear (C) with three clutch disks (D) and plates (E).

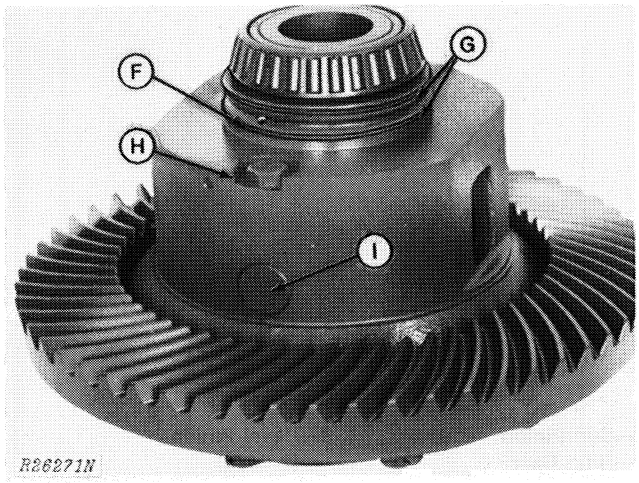

F—Pressure Inlet
G—Sealing Rings
H—Pinion Shaft Retaining Cap Screw
I —Pinion Shaft

Fig. 4-Differential Housing

Invert housing so ring gear is up and use compressed air to blow the lock piston out. Note oil pressure inlet (F) below sealing rings (G).

Remove retaining cap screw (H) from differential housing and remove bevel pinion shaft (I) and bevel pinions.

Repair

Inspect the rear differential parts for scoring and excessive or unusual wear. Check gears for chipped or broken teeth. Examine wear pattern on tooth surface.

The bevel gears (9, Fig. 5) will appear to be missing three teeth on the internal spline. This is for oiling.

NOTE: Bevel gears furnished for parts include thrust washers (8, Fig. 5).

Examine bevel gears. If damaged, differential housing bores may also be damaged.

Refer to FOS Manual 40 - POWER TRAINS, Chapter 1, for a thorough explanation of gear surface wear patterns.

I.D. of the bevel pinions (10, Fig. 5) is 1.3780 to 1.3800 inch (35.001 to 35.052 mm).

O.D. of the bevel gear (9) is 3.1065 to 3.1075 inches (78.905 to 78.931 mm).

O.D. of the bevel pinions shaft is 1.3745 to 1.3761 inches (34.913 to 34.953 mm).

If bevel pinions or bevel pinion shaft are worn or damaged, replace all three.

Check roller bearing cones on differential housing and housing cover. If pitted or worn, remove and press new parts onto hubs.

Inspect bearing quill cups. If worn or scored, press out and press new cups into place.

Inspect differential plates and disks. If a disk is less than 0.100 inch (2.5 mm) thick, replace.

NOTE: If the differential ring gear is replaced, the differential drive shaft must also be replaced. These two parts are a matched set. Refer to Group 25 of this Section for drive shaft removal procedures.

Check sealing rings (G, Fig. 4).

Check bore in right-hand differential bearing quill. Replace quill if sealing ring bearing surface is scored or damaged.

Assembly

Lubricate all mating parts before installation.

If ring gear is replaced, heat gear not to exceed 360°F (182°C) and install on differential housing. Tighten gear-to-housing cap screws to 170 ft-lbs (230 Nm).

Install lock piston (13, Fig. 6) with inner and outer packing. Be sure to lubricate all mating parts with John Deere Hy-GARD Transmission and Hydraulic Oil.

Install 12-tang clutch backing plate (12), paper disks, then 9-tang plates alternately with the other disks.

NOTE: This arrangement allows the piston return springs to be placed on the backing plate when the housing cover is installed.

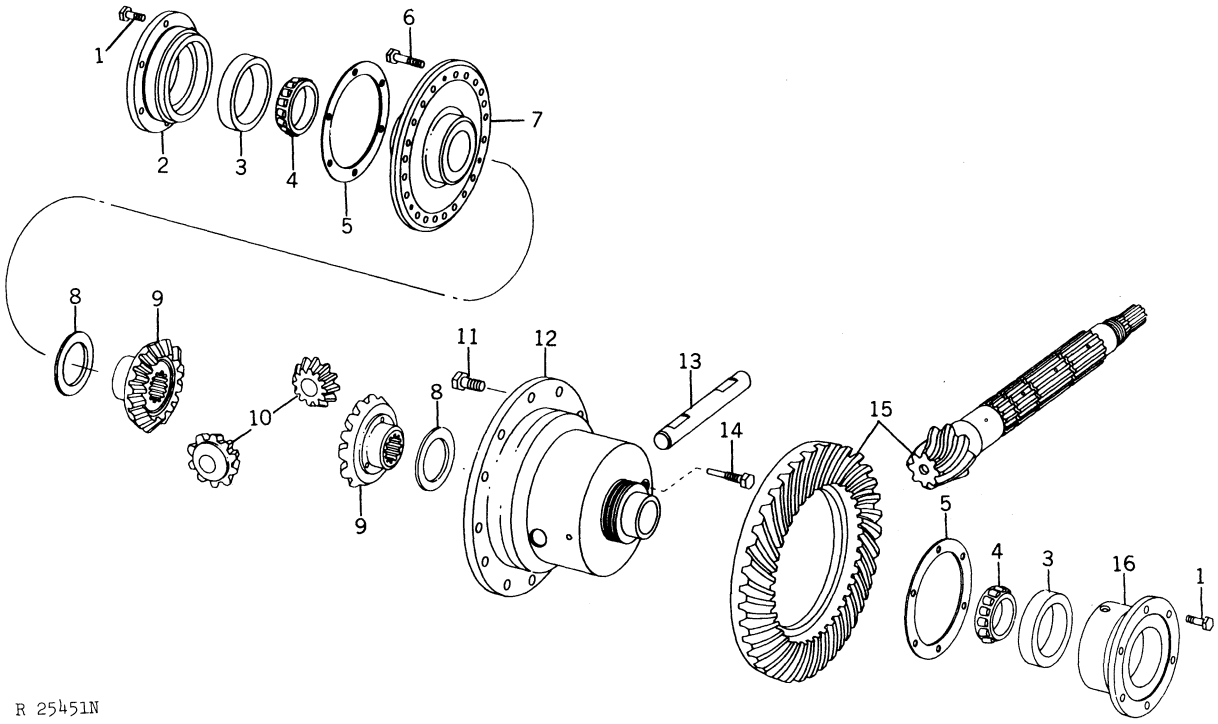

1—Special Cap Screw (12 used)
2—Left-Hand Bearing Quill
3—Bearing Cup (2 used)
4—Bearing Cone (2 used)
5—Shim (Use as required)
6—Cap Screw (12 used)
7—Housing Cover
8—Thrust Washer
9—Bevel Gear (2 used)
10—Bevel Pinion (2 used)
11—Special Cap Screw (12 used)
12—Differential Housing
13—Bevel Pinion Shaft
14—Special Cap Screw
15—Ring Gear And Differential Drive Shaft (Matched Set)
16—Right-Hand Bearing Quill

Fig. 5-Rear Differential Parts (No Lock)

REAR DIFFERENTIAL—Continued

Assembly—Continued

Install thrust washer and bevel gear (19, Fig. 6) in bottom of housing. Install bevel pinion shaft (22) with two bevel pinions and bevel lock gear (with thrust washer). Align hole in shaft with housing bore.

Be sure to install pinion shaft retaining cap screw and proper shim pack with each bearing quill. Torque retaining cap screw to 85 ft-lbs (115 Nm) (11.5 kgm).

Install three springs (18) over spring pins in housing cover with light clean grease.

Press new bearings (4) into place until bearings bottom on shaft.

Place differential housing cover (9) with remaining bevel gear and thrust washer into differential housing and tighten cover cap screws to 85 ft-lbs (115 Nm) torque on differential with no lock or to 55 ft-lbs (75 Nm) on differential with lock.

Install the differential in the differential case and install bearing quill with shims. Tighten bearing quill cap screws to 85 ft-lbs (115 Nm) torque.

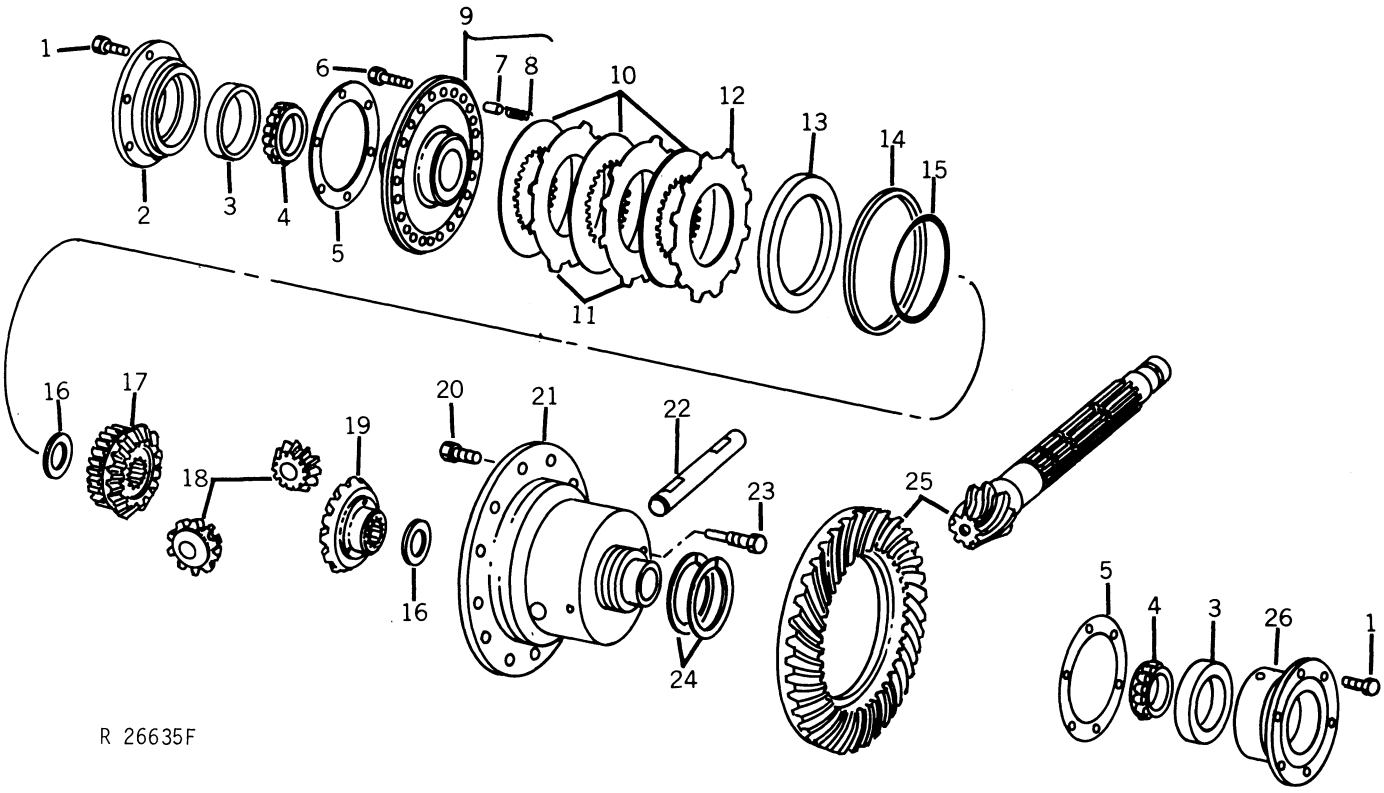

1—Special Cap Screw (12 used)
2—Left-Hand Bearing Quill
3—Bearing Cup
4—Bearing Cone
5—Shim (use as required)
6—Special Cap Screw (12 used)
7—Spring Pin (3 used)
8—Spring (3 used)
9—Differential Housing Cover
10—Drive Disk (3 used)
11—Separator Plate (2 used)
12—Backing Plate
13—Piston
14—Packing
15—O-Ring
16—Thrust Washer (2 used)
17—Bevel Lock Gear
18—Bevel Pinion (2 used)
19—Bevel Gear
20—Special Cap Screw (12 used)
21—Differential Housing
22—Bevel Pinion Shaft
23—Special Cap Screw
24—Sealing Ring (2 used)
25—Ring Gear and Pinion
26—Right-Hand Bearing Quill

Fig. 6-Differential Lock Parts

Adjustments

NOTE: If the differential ring gear is replaced, the differential drive shaft must also be replaced. These two parts are a matched set. Refer to Group 25 of this Section for drive shaft removal and adjustment procedures.

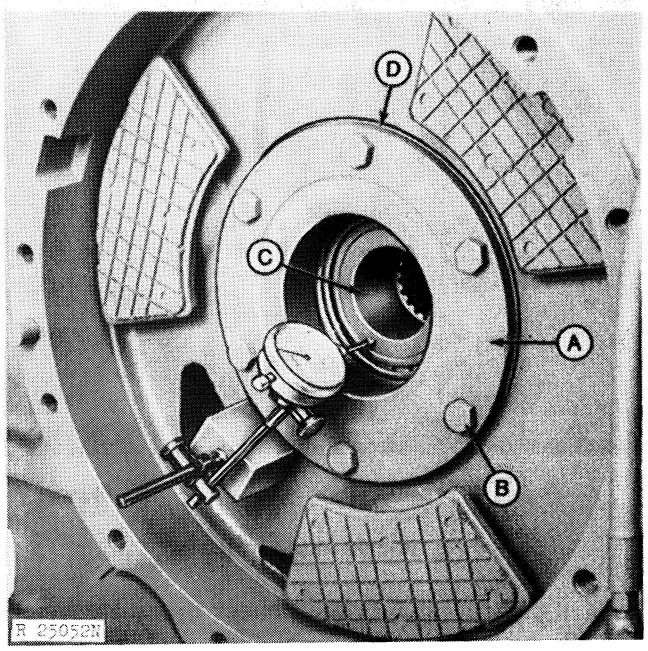

A—Bearing Quill **C—Differential Housing**
B—Cap Screws **D—Shims**

Fig. 7-Adjusting Bearing Preload

Install the differential in the differential case and install bearing quill (A, Fig. 7) with shims (D). Tighten bearing quill cap screws (B) to 85 ft-lbs (115 Nm) torque.

Adjust the bearing quills to give 0.002 to 0.005 in. (0.051 to 0.127 mm) preload by adding enough shims to give measurable end play then subtracting shims to achieve correct preload.

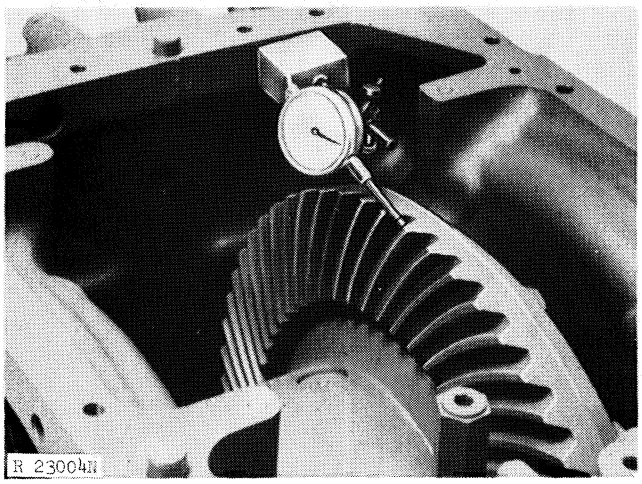

Fig. 8-Adjusting Backlash

Adjust differential backlash (Fig. 8) to 0.0075 to 0.0155 in. (0.178 to 0.381 mm). Correct setting is achieved by transferring shims from one side to the other.

NOTE: Check ring gear backlash at two or more points on the ring gear. If only two points are checked, they should be 180 degrees apart.

Install final drives and tighten rear cap screws to 170 ft-lbs (270 Nm). Install rockshaft housing and tighten cap screws to 85 ft-lbs (115 Nm) torque.

DIFFERENTIAL LOCK VALVE

Testing

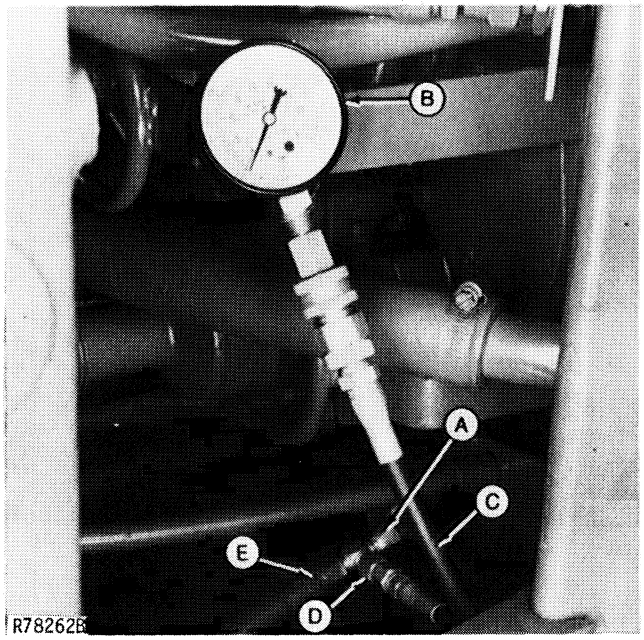

A—6359 (ND135-5.1) Tee
B—2027 (D-21) Gauge
C—2106 (D-19) Hose
D—0723 (D-16) Fitting
E—Differential Lock Pressure Oil Line

Fig. 9-Checking Differential Lock Oil Pressure

1. Disconnect differential lock oil line-to-rear hinge connection and install 6359 (ND 135-5.1) tee (A, Fig. 9).

2. Install pressure hose as shown with a 0 to 600 psi (0-40 bar) (0-40 kg/cm²) gauge.

3. Place the tractor in "Park" and run engine at 2000 rpm. Oil temperature should be between 90 and 110°F (33 and 43°C).

4. Depress differential lock pedal and note gauge reading. Correct pressure is 435-485 psi (30.0-33.4 bar) (30.6-34.1 kg/cm²).

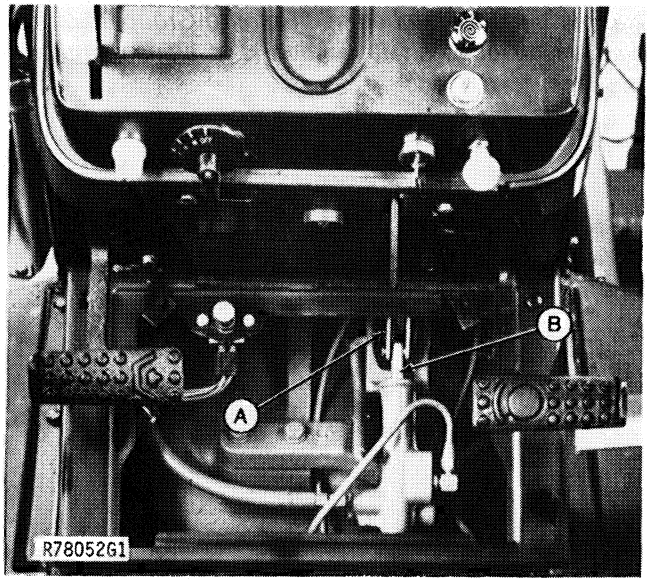

A—Pedal Link **B—Plunger**

Fig. 10-Differential Lock Valve

5. If pressure is incorrect, check hydraulic system standby pressure. It should be 2250 psi (155 bar) (158 kg/cm²). See Section 270.

6. If system pressure is correct, remove cover from floor (Fig. 10), disconnect pedal link (A) from plunger and remove plunger and spring. Add or deduct shims to obtain the correct pressure reading.

7. If correct pressure cannot be obtained, disassemble valve for repair as instructed on the following page.

Removal

1. Relieve hydraulic system pressure.

2. Pull back floor mat flap and remove lock pedal from rod. Remove cover and rod spring assembly noting condition of all parts.

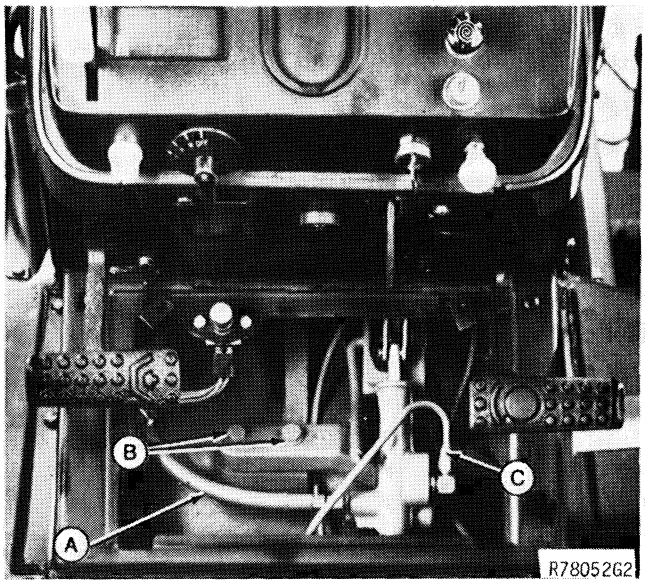

A—Inlet **B—Bracket Screws** **C—Return**

Fig. 11-Removing Lock Valve Assembly

3. Disconnect oil lines to lock valve housing and remove cap screws retaining housing bracket (B, Fig. 11) to clutch housing.

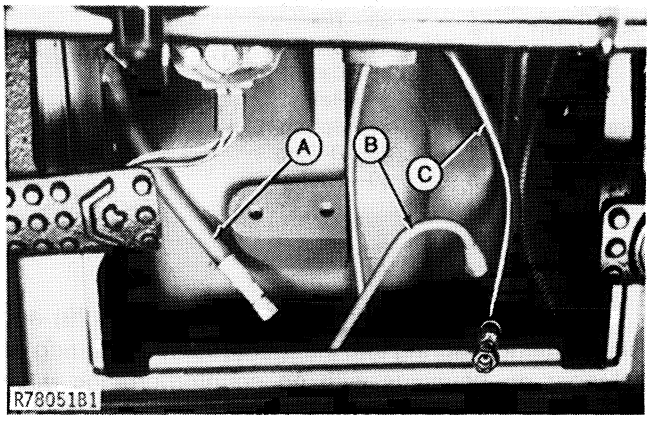

A—Inlet Oil Line **B—To Clutch Housing** **C—Return**

Fig. 12-Lock Valve Removed

Disassembly and Repair

1. Disassemble the valve housing using Fig. 13 as a guide.

2. Inspect pressure control valve (29). O.D. of the valve is 0.4978 to 0.4984 in. (12.644-12.660 mm).

3. Inspect plunger (19). O.D. is 0.555 to 0.559 in. (14.10-14.20 mm). A later design plunger may be used with a wiper seal rather than an O-ring to prevent the plunger from sticking. The later design requires a new valve housing. See tractor Parts Catalog for more information.

4. Inspect valve springs for the following specifications.

SPRING	KEY	FREE LENGTH	WORKING LOAD
Control Valve	(22)	2.56 in. (65 mm)	1.31 in. at 9.5-11.5 lbs. (33.3 mm at 42-52 N)
Plunger	(30)	2.28 in. (58 mm)	1.92 in. at 10.3-12.5 lbs. (48.8 mm at 458-556 N)

5. Replace all O-rings and coat parts with hydraulic oil prior to assembly.

DIFFERENTIAL LOCK VALVE—Continued

Assembly

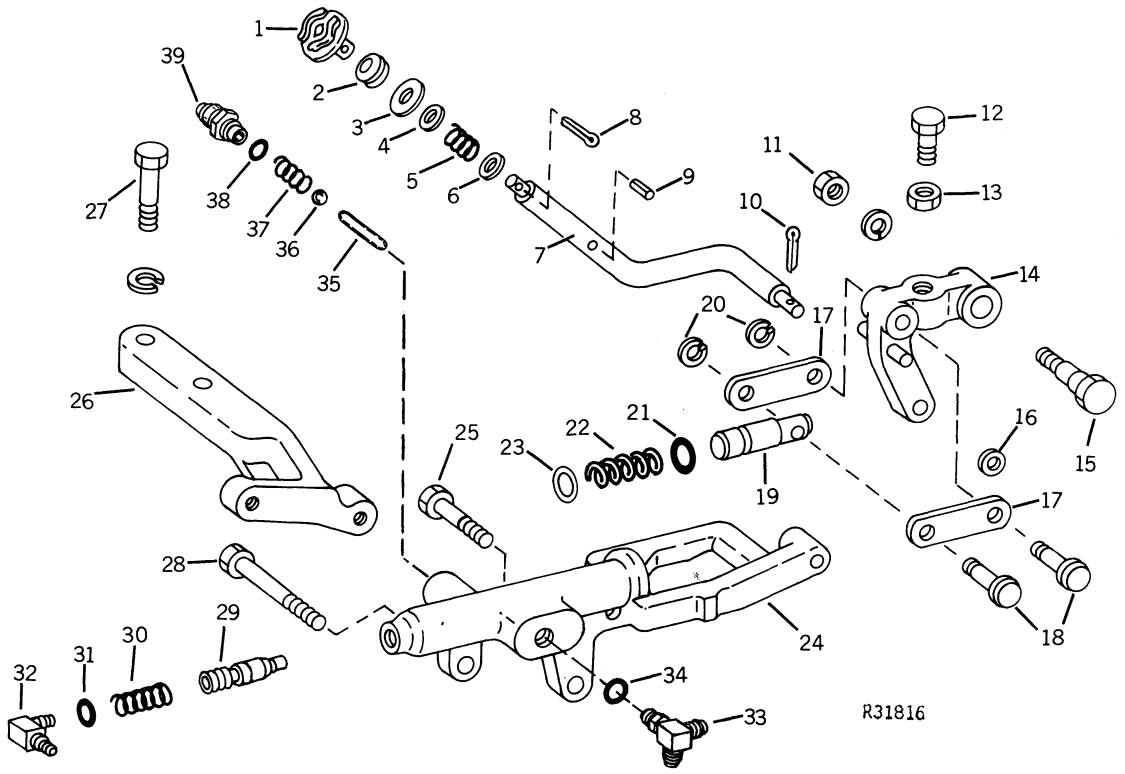

1—Pedal
2—Grommet
3—Washer
4—Washer
5—Spring
6—Washer
7—Rod
8—Cotter Pin
9—Spring Pin
10—Cotter Pin
11—Jam Nut
12—Cap Screw
13—Jam Nut
14—Arm
15—Special Screw
16—Washer
17—Link (2 used)
18—Pin (2 used)
19—Plunger
20—Retaining Ring (2 used)
21—O-Ring, Wiper Seal - Later Model
22—Spring
23—Shim (use as required)
24—Valve Housing
25—Cap Screw
26—Bracket
27—Cap Screw
28—Cap Screw
29—Valve
30—Spring
31—O-Ring
32—Elbow
33—Tee
34—O-Ring
35—Detent Pin
36—Ball
37—Spring
38—O-Ring
39—Fitting

Fig. 13-Differential Lock Valve

1. Install lock pressure control valve and spring (29 and 30, Fig. 13) and install elbow (32).

2. Install pin (35), ball (36), spring (37) and inlet connector (39).

3. Install shims over end of control valve (29) and install plunger spring and plunger (19). Install O-ring on plunger on housings with no counterbore for wiper seal. On housings with counterbore install wiper seal in housing only, do not use O-ring on plunger if the later model housing is used.

4. Install operating arm stop pin into arm (14) so pin protrudes 0.31 in. (8 mm).

Installation and Adjustment

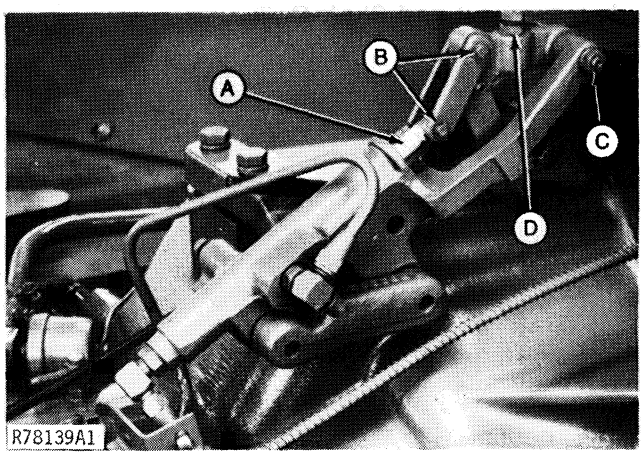

A—Plunger
B—Link Pivot
C—Housing Pivot
D—Adjusting Screw

Fig. 14-Adjusting Lock Linkage (Cab Removed For Illustration)

1. Reverse the steps of removal to install the valve housing (Fig. 14).

2. Adjust the screw (D) on the lock operating arm so the pivot points of the operating links (B) are in line with the pivot point on the valve housing (C) with the plunger in and the bottom of the adjusting screw touching the valve housing.

3. Release the plunger and tighten the adjusting screw (D) two (2) full turns. The valve plunger should now return to the off position when the plunger is released.

4. Lock the adjusting screw jam nut.

5. Test and adjust differential lock operating pressure as instructed on page 8.

FRONT DIFFERENTIAL

Removal

The front differential unit must be removed from the tractor to be repaired. This is done by separating the front differential assembly from the drive support and rolling the differential forward. Before separating the differential, drain the oil from the differential. Refer to Page 30-19 of this section for drain procedure.

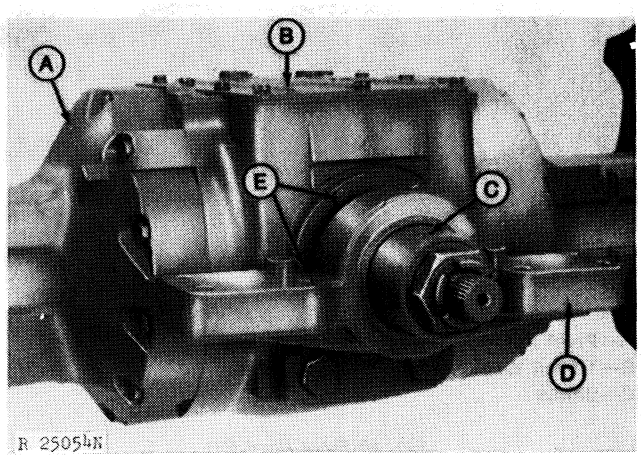

A—Final Drive Housing
B—Case Cover
C—Bearing Quill
D—Rear Support
E—Quill Cap Screws

Fig. 15-Front Differential Separated

After front differential case and assembly has been separated (Fig. 15), block the differential case solidly and remove the wheels and final drives (A) from the case. Remove the front differential by the same method that is used for removing the rear differential by wrapping a chain around the housing, removing bearing quills, and lifting differential out of case.

Rear Support and Shaft Quill

Remove the rear differential case support (D) by grasping support and rotating while pulling rearward.

Remove the front differential drive pinion shaft quill (C) by removing the six quill attaching cap screws (E) and pulling quill out of case.

FRONT DIFFERENTIAL—Continued

Removal—Continued

FRONT PIVOT PIN

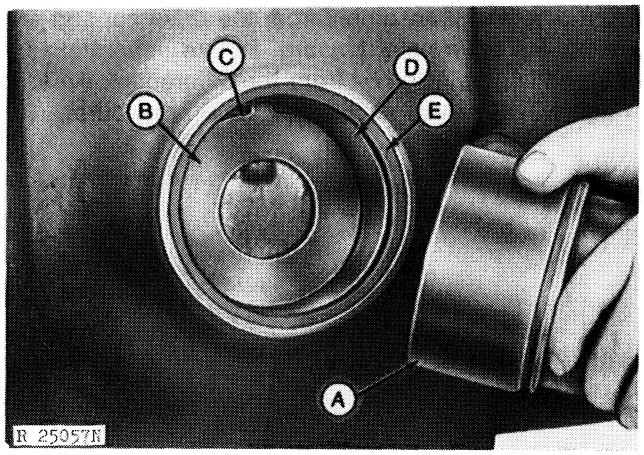

A—Pivot Pin
B—Thrust Washer
C—Shims
D—Bushing
E—Seal

Fig. 16-Front Pivot Pin

Remove front pivot pin (A, Fig. 16). Do not lose shims.

Repair

Differential

Refer to Fig. 25 and examine parts for scoring and excessive or unusual wear. Check gears (10 and 11) for chipped or broken teeth. Examine bearing cones (5 and 18) and cups (4 and 19) for pitting or scoring. Check thrust washers (9) for wear.

Examine the bevel gear, bevel pinions, and bevel pinion shaft (17) for wear. O.D. of the bevel gear is 2.9812 to 2.9828 inches (75.722 to 75.763 mm). O.D. of bevel pinion shaft is 1.2295 to 1.2311 inches (31.230 to 31.270 mm). I.D. of the bevel pinion bore is 1.2335 to 1.2365 inches (31.331 to 31.407 mm).

If the ring gear or the bevel pinion shaft is replaced, both must be replaced as they are a matched set. Heat new ring gear to 360°F (182°C) and install on housing. Tighten cap screws to 85 ft-lbs (115 Nm) torque.

Rear Support and Shaft Quill

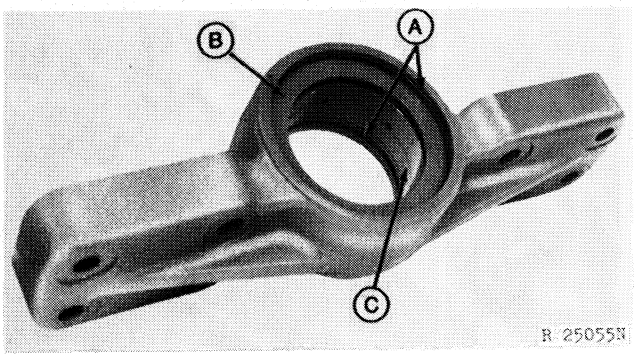

A—Quad-Rings
B—Thrust Washer
C—Bushing

Fig. 17-Rear Support Bushing

Inspect the front differential case rear support bushing for scoring or excessive wear. I.D. of bushing (C, Fig. 17) is 5.1290 to 5.1305 inch (130.277 to 130.315 mm). If bushing is to be replaced, remove quad-rings (10, 17; Fig. 20) and pull bushing from housing. Drive new bushing in until it bottoms in the bore, using JDT-28 Bushing Installation Tool.

Inspect the mating surface for the bushing on the drive shaft bearing quill for scoring or burrs.

When disassembling front differential drive shaft bearing quill assembly, use the holding tool constructed to use with the differential drive shaft tightening procedure as a fixture to hold the bearing quill assembly. (Refer to Group 40 of this Section for tool specifications.)

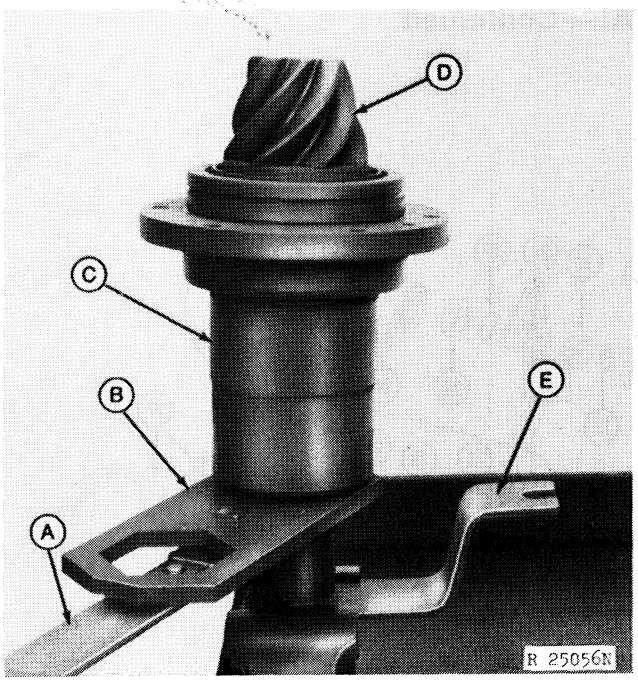

A—Wrench
B—JDT-29 Tool
C—Bearing Quill
D—Drive Shaft and Pinion
E—Holding Fixture

Fig. 18-Bearing Quill in Fixture

Place the fixture in a vise as shown in Fig. 18 and position the splined end of drive shaft in coupling. Use the JDT-29 Wrench to loosen the lock nut. Remove drive shaft from fixture and disassemble bearing quill.

Inspect front pivot pin (A, Fig. 19) and examine for scoring or excessive wear. O.D. of pivot pin at bushing mating surface is 5.124 to 5.126 in. (13.015 to 13.020 cm).

If the front pivot pin bushing (D, Fig. 10) is replaced, drive new bushing into bore until it bottoms in bore. I.D. of bushing is 5.1290 to 5.1305 in. (13.028 to 13.031 cm). Use bushing installer JDT-28.

Measure thickness and check condition of thrust washers and shim in pivot pin bore. Thrust washer (B) is 0.245 to 0.255 in. (6.22 to 6.48 mm) thick. Shim (C) behind thrust washer is 0.036 in. (0.91 mm).

Assembly

Front Pivot Pin

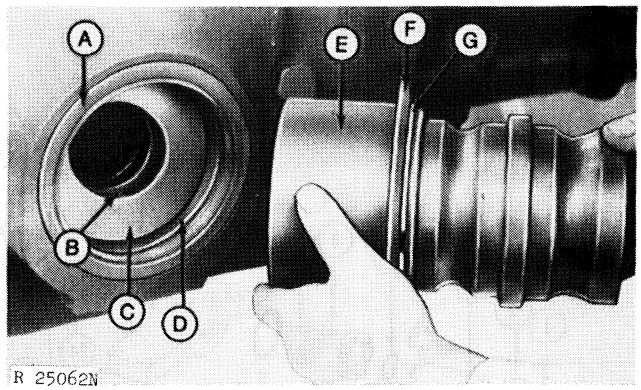

A—Oil Seal
B—Shim
C—Thrust Washer
D—Bushing
E—Pivot Pin
F—Washer
G—Snap Ring

Fig. 19-Installing Pivot Pin

When installing the front pivot pin (E, Fig. 19), remove the snap ring (G) and washer (F) from pin until the end play is set.

Place a shim (B) and the thrust washer (C) into the pivot pin bore. If seal (A) is replaced, drive new seal in bore until outside is flush to 0.020 inch (0.51 mm) below bore.

FRONT DIFFERENTIAL—Continued

Assembly—Continued

Rear Support and Shaft Quill

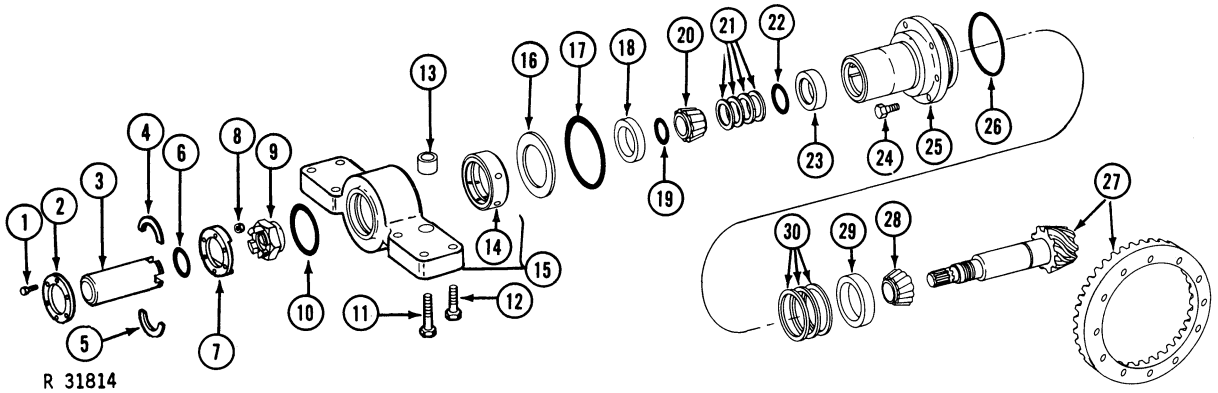

1—Cap Screw
2—Rear Retainer
3—Coupling
4—Keeper Halve
5—Keeper Halve
6—O-Ring
7—Front Retainer
8—Lock Nut
9—Special Nut
10—Quad Ring
11—Cap Screw
12—Cap Screw
13—Hollow Dowel
14—Bushing
15—Rear Support with Bushing
16—Thrust Washer
17—Quad Ring
18—Oil Seal
19—O-Ring
20—Bearing Cone
21—Shims (0.007, 0.010, 0.012, 0.015 in. [0.18, 0.25, 0.31, 0.38 mm] use as required)
22—Spacer
23—Bearing Cup
24—Cap Screw
25—Bearing Quill
26—O-Ring
27—Pinion Shaft and Ring Gear
28—Bearing Cone
29—Bearing Cup
30—Shims (0.003, 0.005, 0.010 in. [0.08, 0.13, 0.25 mm] use as required)

Fig. 20-Front Differential Drive Shaft and Front Support

If the bearing cone at pinion end of shaft is replaced, press new bearing cone onto shaft until cone bottoms on shaft.

NOTE: If the differential drive shaft is to be replaced, the differential ring gear must also be replaced. These parts are matched and cannot be replaced separately.

If the drive shaft and ring gear (27, Fig. 20) are replaced, or if the pinion-end bearing cup (29) and cone (28) are replaced, determine the proper shim pack (30) as follows:

Subtract the number etched on the end of the pinion shaft from the fixed mean dimension of 8.335. The resulting figure gives you the shim pack thickness needed.

The front differential case and bearing quill now used in production and for service parts will no longer have dimensions stamped on them. Earlier model tractors with the dimensions stamped on the differential case or quill can be repaired using this new one step procedure with the fixed 8.335 mean dimension.

If the front oil seal (18, Fig. 20) is replaced, install new seal flush with end of quill bore. Do not install seal if adjustment needs to be made until after making adjustment.

When assembling drive shaft bearing quill, stand drive shaft on work bench with pinion end down. With bearing cup and shim pack properly in place in pinion end of quill, place bearing quill down on shaft.

NOTE: The bearing quill oil seal (18, Fig. 20) should be removed for assembling procedure if not already done so.

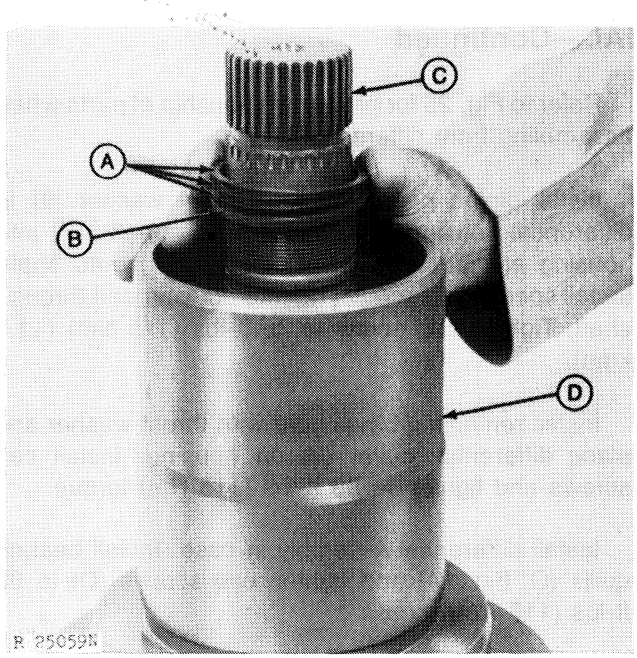

A—Shims **C—Drive Shaft**
B—Spacer **D—Bearing Quill**

Fig. 21-Installing Spacer and Shims

Drop the spacer (B, Fig. 21) onto shaft and add enough shims (A) to give a measurable amount of end play when bearing is in place. Heat bearing to 300°F (148°C) and install on shaft. Install lock nut and tighten down against bearing.

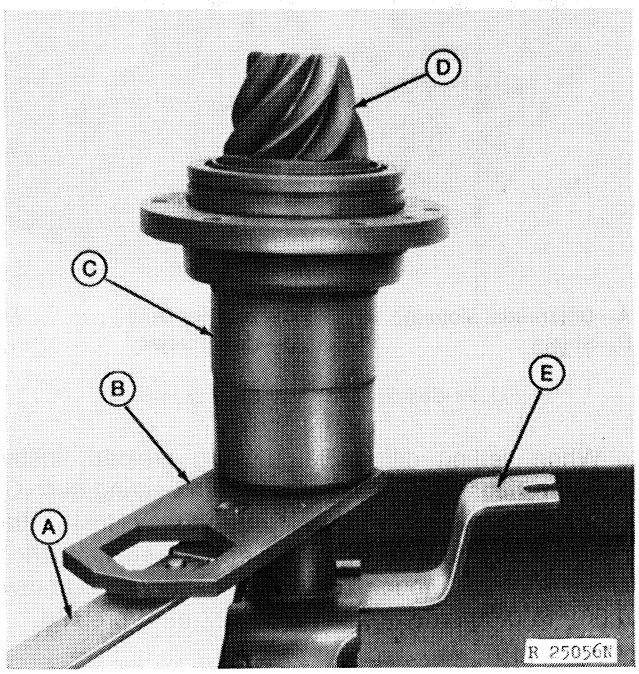

A—Torque Wrench **D—Drive Shaft**
B—JDT-29 **E—Holding Tool**
C—Bearing Quill

Fig. 22-Tightening Lock Nut

Place the drive shaft holding tool (construction specifications in Group 40, Special Tools) in a vise and install splined end of drive shaft in tool.

Before inserting shaft in holding tool, position the smaller end of the JDT-29 Wrench Tool over end of shaft.

Tighten drive shaft nut to 445 ft-lbs (603 Nm). Loosen nut, then retighten to 300 ft-lbs (407 Nm) torque.

IMPORTANT: When the differential drive shaft is adjusted and assembled, the shaft nut must be torqued to three different specifications (each at a different point in the procedure).

When using the JDT-29 Wrench with a 35 to 45 in. (889-1143 mm) long torque wrench, set the torque wrench as shown below to obtain the proper torque specification. Torque wrench length is the distance from the center of the handle to the center of the wrench drive. Be sure to keep the wrench parallel with the JDT-29 Wrench.

If the torque wrench is not 35 to 45 in. (889-1143 mm) long, use the formula given in Group 40, page 12 to derive the proper torque wrench setting when using the JDT-29 Wrench.

SPECIFIED TORQUE	TORQUE WRENCH READING
445 ft-lbs (603 Nm) (60.3 kgm)	409 ft-lbs (555 Nm) (55.5 kgm)
300 ft-lbs (407 Nm) (40.7 kgm)	276 ft-lbs (373 Nm) (37.3 kgm)
275 ft-lbs (373 Nm) (37.3 kgm)	253 ft-lbs (345 Nm) (34.5 kgm)

Litho in U.S.A.

FRONT DIFFERENTIAL—Continued

Assembly—Continued

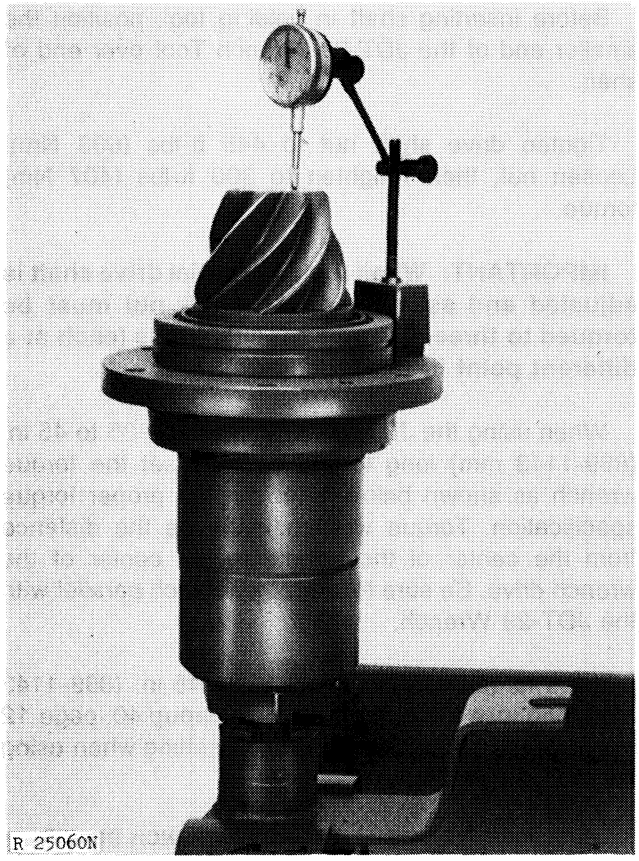

Fig. 23-Checking Drive Shaft End Play

Place a dial indicator on bearing quill flange surface and position pointer to rest on end of drive shaft pinion (Fig. 23). Determine amount of shims to be removed to give 0.001 to 0.004 inch (0.025 to 0.102 mm) end play by moving bearing quill up and down and reading indicator dial.

Loosen lock nut and remove quill from holding tool. Remove necessary shims for proper end play. Reinstall bearing cone.

Install oil seal in bearing quill bore until seal is 0.060-inch (1.52 mm) below end of quill bore. Install lock nut and tighten to 275 ft-lbs (273 Nm) torque. Remove quill from fixture.

Refer to Fig. 25 for proper relationship of parts when assembling front differential.

Install pinion gear (10) with thrust washer (9) in differential housing (14). Install pinion shaft (17) into housing and position bevel pinions (11) onto shaft. Install special cap screw (12) into housing and through shaft. Tighten cap screw to 85 ft-lbs (115 Nm) (11.5 kgm).

Install remaining bevel gear with thrust washer and place differential cover (8) on housing. Install cap screws and tighten to 85 ft-lbs (115 Nm) torque.

Install differential assembly in case. Install bearing quills (C, Fig. 24) and tighten cap screws (D) to 85 ft-lbs (115 Nm) torque.

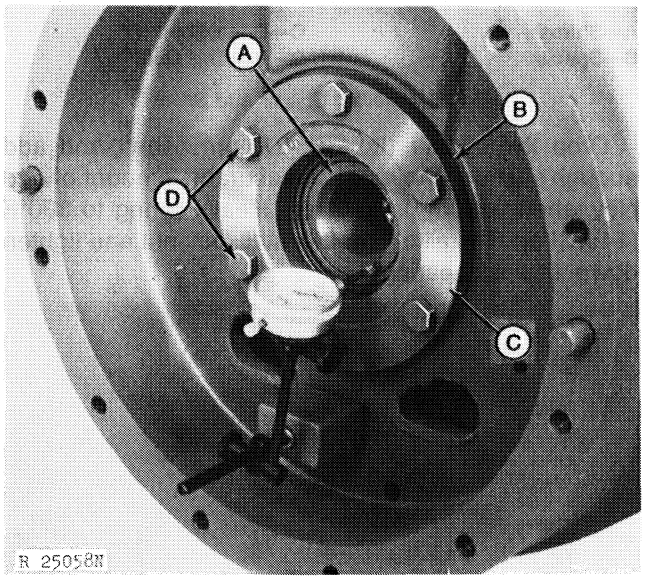

A—Differential Housing
B—Shims
C—Bearing Quill
D—Cap Screws

Fig. 24-Setting Differential Bearing Preload

When setting differential bearing preload, install enough shims (B, Fig. 24) underneath bearing quill (C) to give a measurable amount of end play. Install dial indicator so point indicator sets on differential bearing shaft. Subtract enough shims from bearing quill to give 0.002 to 0.005 inch (0.051 to 0.127 mm) preload.

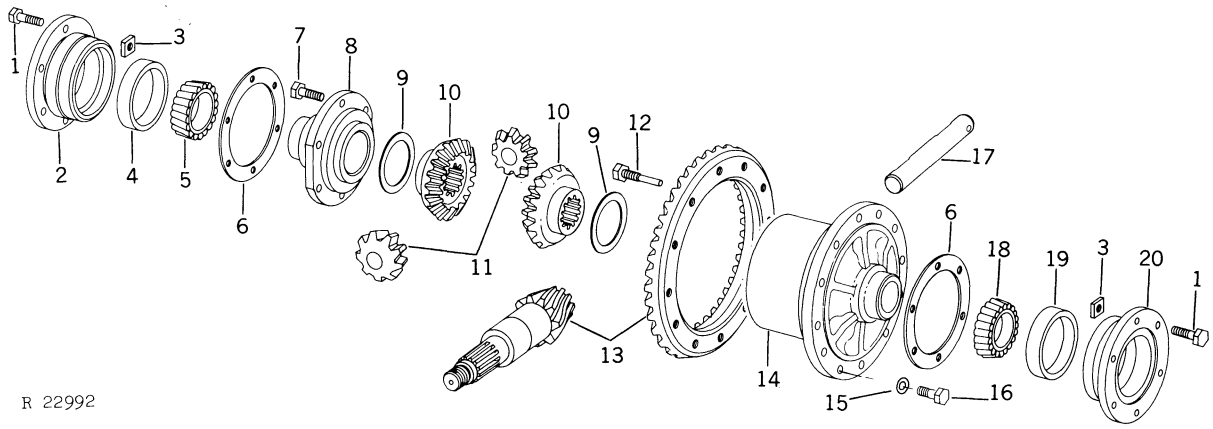

1—Cap Screw
2—Bearing Quill
3—Special Nut (2 used)
4—Bearing Cup
5—Bearing Quill
6—Shims (0.003, 0.005, 0.010 in. [0.076, 0.127, 0.254 mm]), use as required.
7—Cap Screw
8—Differential Housing Cover
9—Thrust Washer
10—Bevel Gear
11—Bevel Pinion
12—Special Cap Screw
13—Spiral Bevel and Pinion with Shaft (matched set)
14—Differential Housing
15—Washer
16—Cap Screw
17—Bevel Pinion Shaft
18—Bearing Cone
19—Bearing Cup
20—Bearing Quill

Fig. 25-Front Differential Parts

If differential drive shaft has not been removed, or after installation when repaired, adjust the ring gear backlash. Install dial indicator (see Fig. 8) to rest on ring and measure backlash. Backlash measurement should be 0.0075 to 0.0155 inch (0.190 to 0.394 mm). Adjust backlash by transferring shims from one bearing quill to the other. Increase backlash by moving shims from left to right; decrease by moving from right to left.

NOTE: Check ring gear backlash at two or more points on ring gear. If only two points are used, they should be 180 degrees apart.

Installation

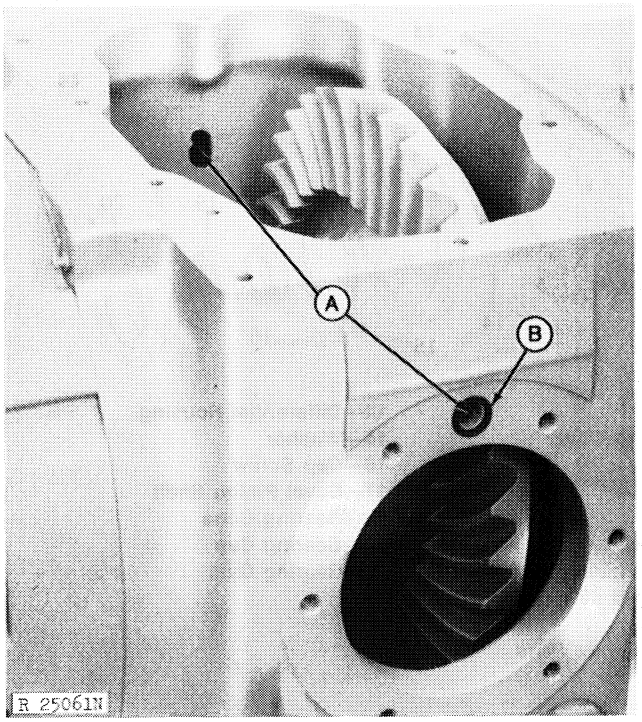

A—Lube Passages **B—Lube Packing**

Fig. 26-Rubber Packing in Place

Notice the lube packing (B, Fig. 26) in the rear of the differential case. Be sure the packing is in place when the differential drive shaft bearing quill is replaced. (Also notice lube passage to front pivot pin. Be sure passage is not clogged in any way.)

Install front differential drive shaft bearing quill with shaft in case and tighten cap screws to 85 ft-lbs (115 Nm) torque. Match lube hole in bearing quill to lube passage in rear of differential case.

Install rear support onto bearing quill. Be sure thrust washer and O-rings are installed in support. Push support against thrust surface on bearing quill.

Install differential case cover. Tighten cover cap screws to 55 ft-lbs (75 Nm) torque.

If final drive housings have not been installed, place sun pinions in place and install final drives. Tighten final drive attaching cap screws to 240 ft-lbs (325 Nm) torque.

Roll front differential assembly under tractor and attach to front support. See Section 10, Group 25 for procedure.

Refill differential housing following procedure on Page 30-19.

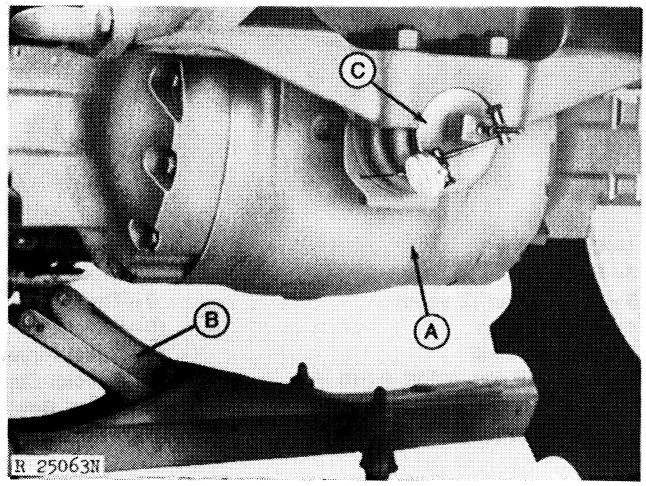

A—Differential Case **C—Pivot Pin**
B—Floor Jack

Fig. 12-Determining Pivot Pin End Play

With a floor jack (B, Fig. 12) under the front hinge, relieve weight on front differential until the tractor tires are touching the floor but not supporting much weight.

Position a dial indicator (with a long pointer) on the end of the pivot pin (C) and position pointer end to rest on the face of the pivot pin bore.

Rotate the tires back and forth to cause differential movement and read end play on dial indicator. Add or remove shims to give 0.002 to 0.008 inch (0.05 to 0.20 mm) end play on pivot pin. When possible, use thinner shims (without tangs) between thrust washer and tanged shims.

Install oil seal using JDE-106 Installer. Install seal flush with front of case.

Loosen differential from support and install the pivot pin washer and snap ring. Join front differential to front axle support. See Section 10, Group 25 for procedure.

Tighten, or loosen then tighten, the front drive shaft coupler lock nut until the tangs of the coupler engage with the notches in the lock nut. Torque specification to gain such a position should be between 200 and 350 ft-lbs (271 to 475 Nm).

Draining, Filling and Checking Front Differential Oil

Early Model - 8430 (-4770) 8630 (-6701)

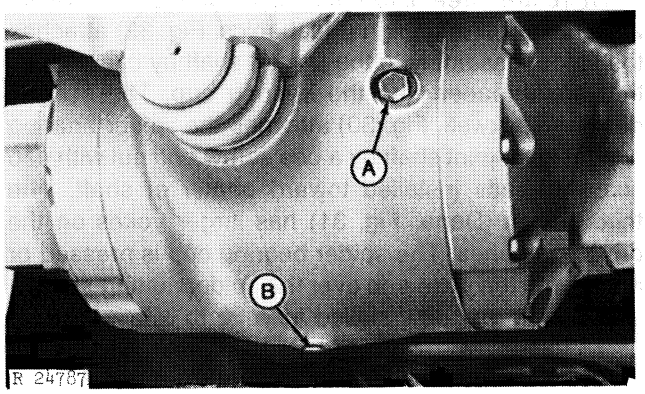

A—Filler Plug **B—Drain Plug**

Fig. 28-Front Differential Housing (Early Models)

Remove drain plug (B, Fig. 28) from differential housing and drain oil. Replace the plug. Remove the filler plug (A) and fill housing to plug level with SAE 90 gear lubricant meeting specifications in Section 10, Page 20-2 of this manual. Capacity of the housing is 7 U.S. gallons (27 L). Replace filler plug.

Late Model - 8430 (4771-) 8630 (6702-)

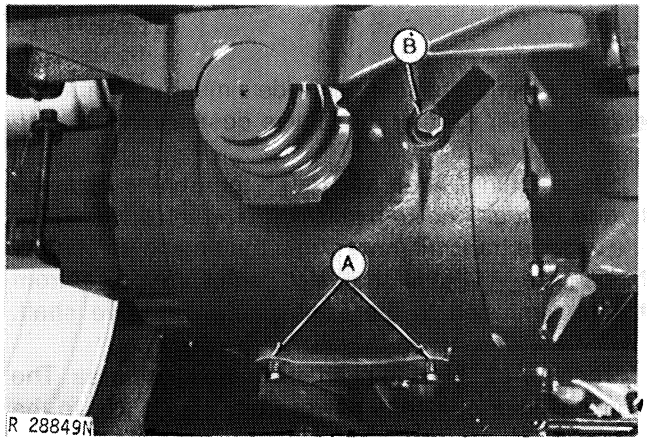

A—Drain Plugs **B—Filler Plug**

Fig. 29-Front Differential Housing (Late Models)

Remove drain plugs (A, Fig. 29) from differential housing and drain oil. Replace drain plugs. Remove filler plug. Back both drain plugs out 12 turns. Using SAE 90 gear lubricant, fill housing to level of filler plug. Add oil slowly, allowing time for the final drive housings to fill with oil. Capacity of the housing is 7 U.S. gallons (27 L). Replace filler plug. Tighten both drain plugs.

Checking Oil Level

Front differential oil level can be checked by either of two methods:

A. Allow tractor to stand idle for one hour before removing filler plug. Oil should be level with filler plug.

B. Back both drain plugs out 12 turns and remove filler plug. Oil should be level with filler plug.

DRIVE SHAFTS

GENERAL INFORMATION

The U-joints and shafts provide a means to route the engine power to their respective destinations.

Since a hinge area separates the engine from the torque divider and transmission, U-joint drive shafts are used to transmit power from the engine across the hinge area. A U-joint shaft also routes the power from the transmission to the front differential drive shaft.

There are three U-joint shafts in the hinge area. The upper U-joint transmits power from the engine to the torque divider and the transmission. The middle U-joint (with independent PTO) transmits the power from the engine and the Independent PTO clutch to the torque divider and the PTO shaft. The lower U-joint transmits power that has been delivered to the transmission to the front differential drive shaft and the front drive.

There are three different designs used in the U-joint assemblies. One design (Mechanics, Fig. 32) attaches the spider assembly to the U-joint shaft by cap screws that are threaded into the bearing cup. The second design (Rockwell, Fig. 30) attaches the spider bearing cup to the U-joint shaft by a cap screw and nut with cap screw threads installed toward center of shaft. The third design (Dana, Fig. 31) has larger yokes on the drive shaft ends. The spider bearing cup is pressed or driven into the yoke and over the spider mating surface and a snap ring is installed in yoke to retain cup.

The front axle drive shaft to the front differential is attached to the lower U-joint at the hinge area and is positioned to pass through the front hinge and the lower part of the clutch housing. A self-aligning bearing assembly is located in the lower part of the clutch housing and pilots the front drive shaft to the differential.

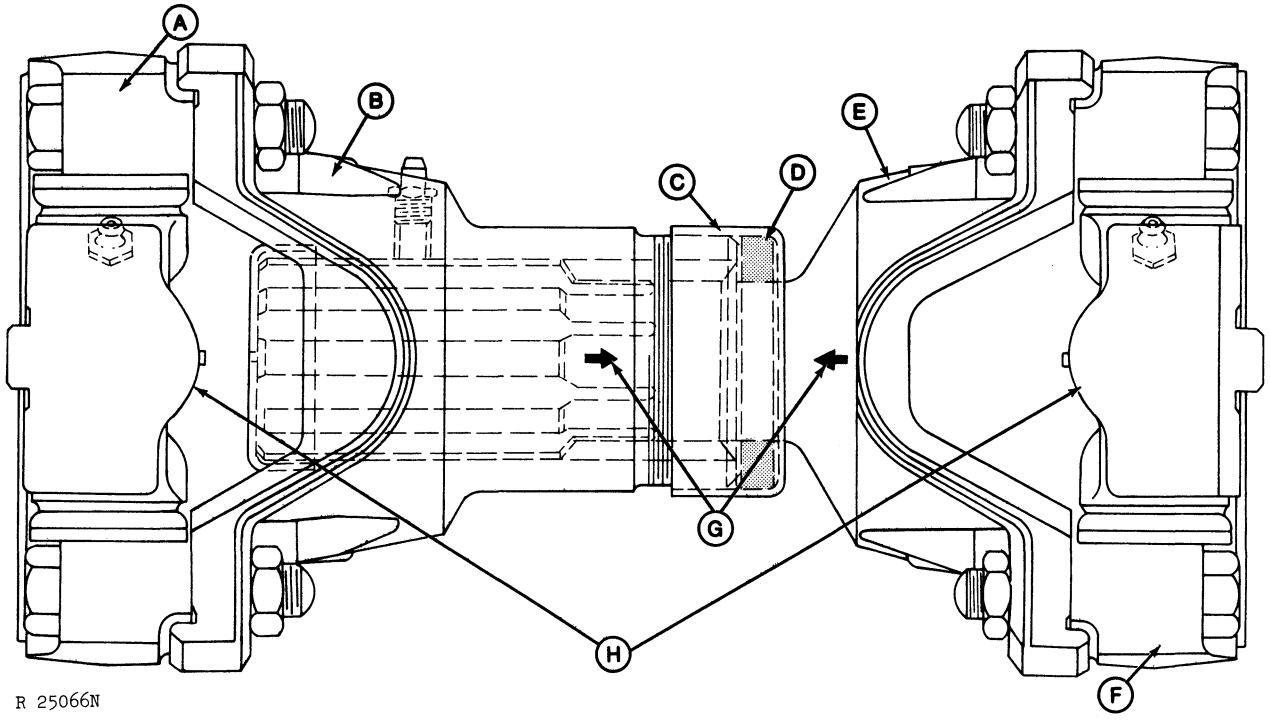

A—Bearing Cup
B—Rear Yoke
C—Front Yoke
D—Washer
E—Dust Cap
F—Special Washers
G—Timing Marks
H—Spider Assembly

Fig. 30-Telescoping U-Joint (Rockwell) (Transmission Clutch-to-Torque Divider)

REPAIR

Any of the three U-joints could be of the Rockwell design. The upper and lower shafts could be of the Mechanics design. The middle shaft could be the Dana design.

When repairing the Dana design, note there is only one washer between the cork washer and the dust cap. The other designs have two such washers.

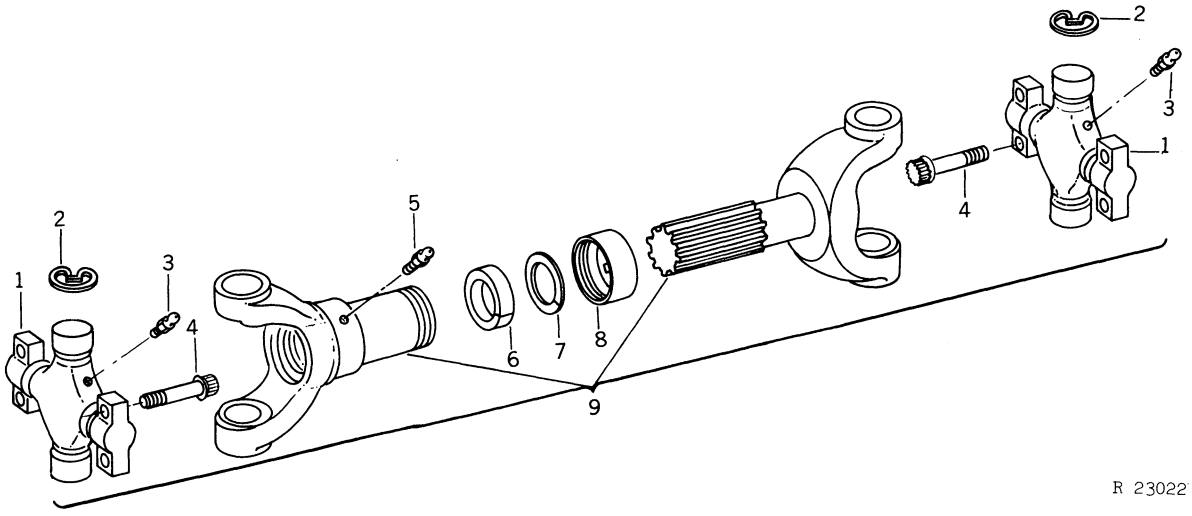

1—Spider and Bearing
2—Snap Ring
3—Grease Fitting
4—Special Cap Screw
5—Grease Fitting
6—Cork Washer
7—Washer
8—Dust Cap
9—Telescoping U-Joint

Fig. 31-Telescoping U-Joint (Dana)
(PTO Clutch to Torque Divider)

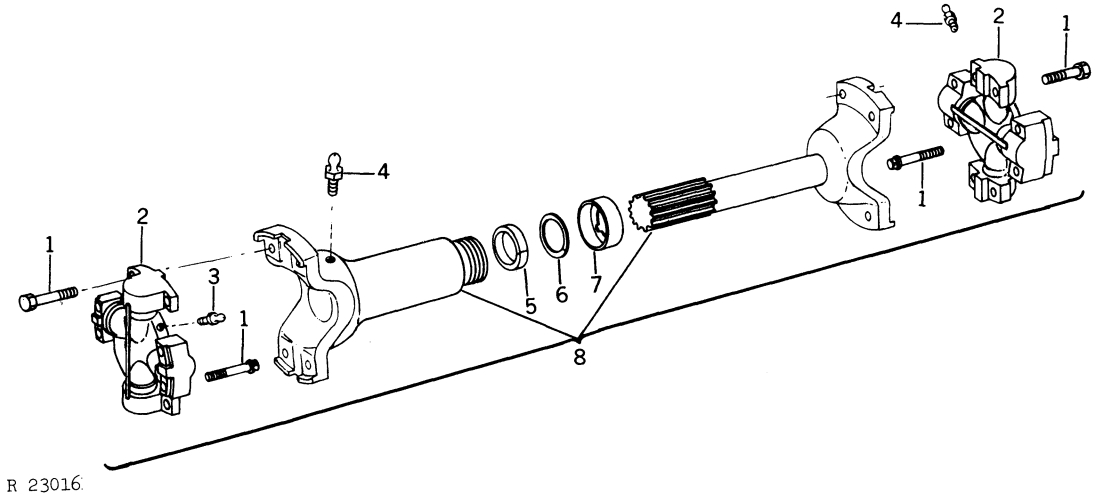

1—Special Cap Screw
2—Spider and Bearing
3—Grease Fitting
4—Grease Fitting
5—Felt Washer
6—Washer (2 used)
7—Dust Cap
8—Telescoping U-Joint

Fig. 32-Telescoping U-Joint (Mechanics)
(Front Axle Drive, Rear)

DRIVE SHAFTS—Continued

REPAIR—Continued

If the front drive shaft is to be replaced, the front drive assembly must be positioned to allow drive shaft removal. Refer to Section 10, Group 25 for removal procedures.

If the self-aligning bearing in the front hinge is to be repaired, remove the front drive shaft U-joint and yoke. Disconnect front drive shaft-to-front differential retainer coupler.

Remove the lower U-joint from the hinge area. Remove the castellated nut holding yoke to front shaft and remove yoke.

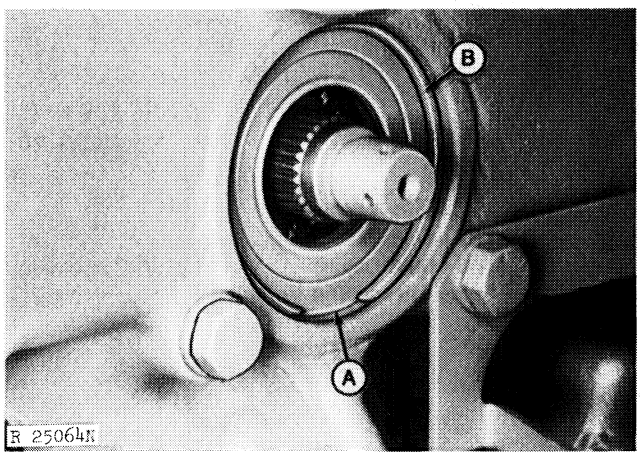

A—Bearing Retainer **B—Snap Ring**

Fig. 33-Bearing Retainer Snap Ring

A large snap ring (B, Fig. 33) holds the bearing retainer (A) in the hinge. Remove snap ring and remove retainer by pushing on front drive shaft toward retainer. The retainer will be positioned on a dowel pin in the retainer bore.

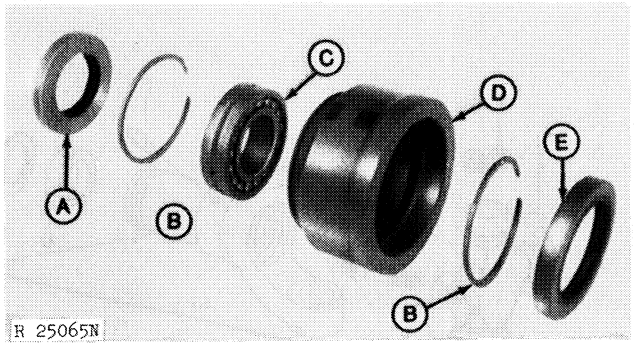

A—Oil Seal
B—Snap Ring
C—Bearing
D—Bearing Retainer
E—Oil Seal

Fig. 34-Front Bearing Assembly

A snap ring (B, Fig. 34) on each side of the bearing (C) holds the bearing in the retainer (D). Oil seals (A and E) in each end of the retainer provide sealing.

When replacing retainer oil seals, drive new seals in flush with bearing retainer surface.

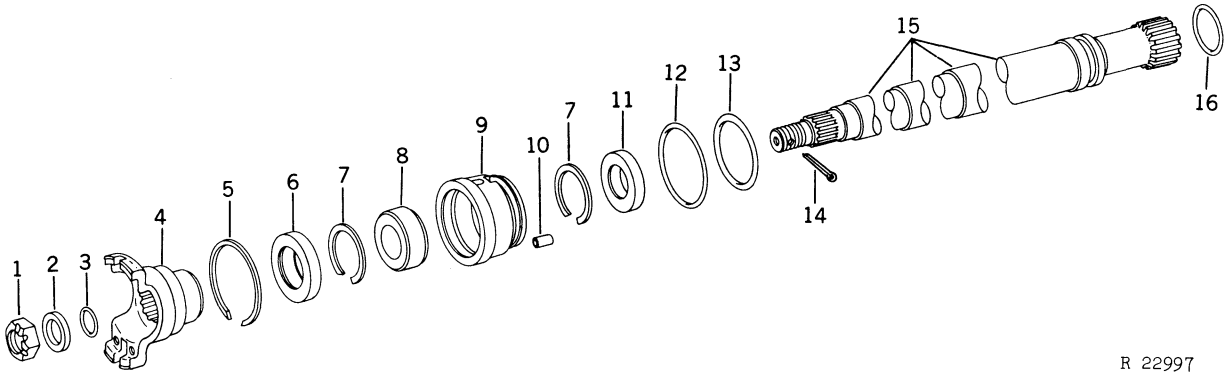

1—Castellated Nut
2—Washer
3—O-Ring
4—Yoke
5—Snap Ring
6—Oil Seal
7—Snap Ring
8—Self-aligning Bearing
9—Bearing Retainer
10—Dowel Pin
11—Oil Seal
12—O-Ring
13—O-Ring
14—Cotter Pin
15—Front Differential Drive Shaft
16—O-Ring

Fig. 35-Front Differential Drive Shaft and Bearing

INSTALLATION

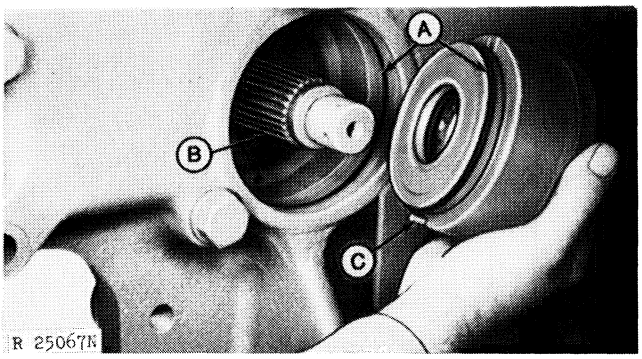

A—O-Rings **C—Dowel Pin**
B—Drive Shaft

Fig. 36-Installing Bearing Retainer

When installing the front axle drive shaft, make sure the O-ring (A) is installed in the retainer bore and in the retainer groove. Also, be sure the dowel guide pin (C) is in position in hole.

Lubricate bearing quill and install in front hinge. Install snap ring in groove (Fig. 28) in front hinge to retain bearing retainer.

For additional information concerning joining of tractor, see Section 10, Group 25.

Install yoke onto drive shaft end and tighten yoke-holding nut to 400 ft-lbs (542 Nm) torque using JDT-27 to hold yoke (see Fig. 14, Section 50, Group 20). (If torque wrench will not go to specified torque, use JDST-38 Torque Multiplier and set torque wrench accordingly.)

TIMING DRIVE SHAFTS

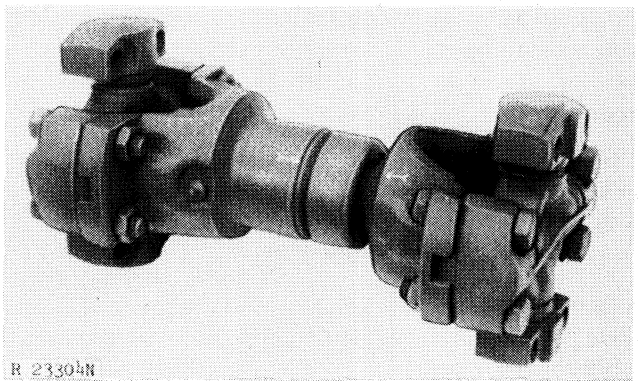

Fig. 37-Aligning Timing Marks

IMPORTANT: When installing drive shaft with slip joint, arrows (Fig. 37) must point together. Each drive shaft with slip joint is a balanced assembly; do not intermix the assemblies. Be sure drive shaft universal joints are "in time."

Install telescoping U-joint with large end containing spline grease zerk toward front hinge. On 8430 tractors, tighten attaching cap screws to 70 ft-lbs (95 Nm) torque. On 8630 tractors, tighten attaching cap screws to 85 ft-lbs (115 Nm) torque.

Litho in U.S.A.

Group 35
FINAL DRIVES

GENERAL INFORMATION

Each final drive unit contains one rear axle mounted on two tapered roller bearings with oil seals, and a planetary gear system which provides the final speed reduction.

The planetary sun gear is driven by the differential. The ring gear is restrained by the final drive housing. The planet pinion carrier is splined to the rear axle.

See FOS Manual 40 - POWER TRAINS, Chapter one for a more complete explanation of the planetary and its operation.

REMOVAL

Rear Final Drive

The final drive assemblies of both front and rear of tractor are very similar. Therefore repair procedure will cover all final drive assemblies unless a distinction is made.

For rear final drive removal, fenders should be removed first, if so equipped.

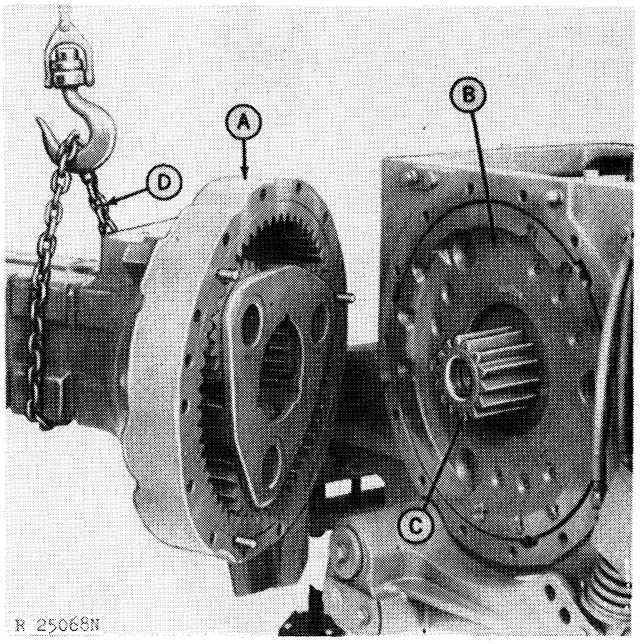

A—Final Drive Assembly
B—Brake Backing Plate
C—Sun Pinion
D—Chain in Position

Fig. 1-Final Drive Removal (Rear)

When removing rear final drive, use a heavy-duty floor jack and raise tractor enough to relieve weight on tire. Remove tire and wheel from tractor.

CAUTION: When removing the final drive units, be sure to observe all necessary precautions to avoid possible personal injury.

Wrap a chain around the axle housing (in first fender adjusting notch in housing from flange end) and use a hoist to remove final drive. BE CAREFUL when pulling final drive housing away from transmission case that sun pinion (C, Fig. 1), brake backing plate (B), or brake disk does not fall on floor.

Remove final drive and place in clean work area.

Front Final Drive

NOTE: The front final drives may be removed with or without the front differential assembly. See Section 10, Group 25 for information on separating the front drive assembly from the drive support.

If the front differential is removed, remove final drives with a support under the front differential case. Remove final drive housing in the same manner as rear final drive removal. Note that the front final drives have no brake.

If the final drives are removed without removing front differential case, complete the following steps.

1. Drain the front differential as instructed in Group 30, page 19.

2. Support tractor using D-05153ST Lifting Bracket and remove wheel using D-05018ST Wheel Lift. See illustration on page 16 of this Group.

3. Support axle housing and remove attaching cap screws. Support using a chain hoist as shown in Fig. 1.

4. Lower tractor until axle housing clears differential support and remove the housing.

DISASSEMBLY AND REPAIR

NOTE: It is advisable to check axle bearing adjustment whenever the final drive housings are removed. The rolling drag torque check given on page 13 of this Group is a quick means of determining whether the assembly must be readjusted. The adjustment procedure begins on page 10.

NOTE: The tools used in this Group are listed in Group 40. Many of these tools are to be constructed in the shop. Group 40 gives instructions on making each of these tools.

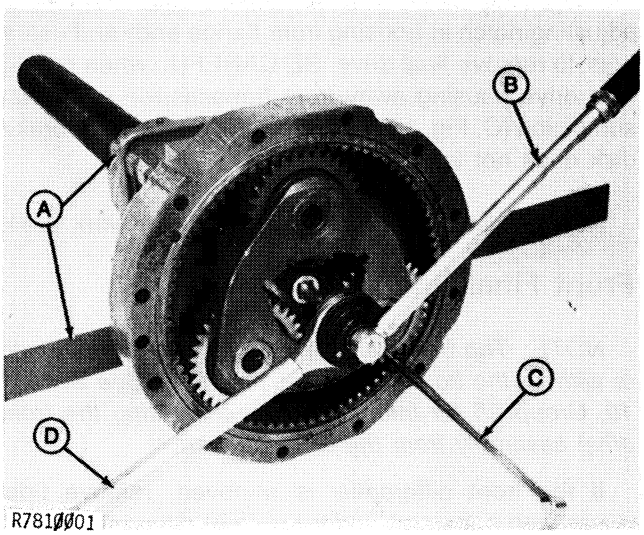

A—Housing Support Tool
B—Torque Wrench
C—Bar
D—JDST-38 Torque Multiplier

Fig. 2-Tightening Axle Screw

NOTE: Many of the axle assembly repairs and adjustment may be performed without removing the tractor tire. The assembly may also be adjusted and repaired in either a vertical or horizontal position. Important procedural deviation related to this is noted throughout this Group.

1. Place the housing assembly on the support tool (A, Fig. 2) and tighten the U-bolt nuts securely.

2. Assemble the bar (C), torque wrench (B) and torque multiplier (D) opposite as they are shown in Fig. 2. Fig. 2 shows the tools in position to tighten the screw.

NOTE: JDST-38 Torque Multiplier is not required but eases the procedure since torque on screw is high.

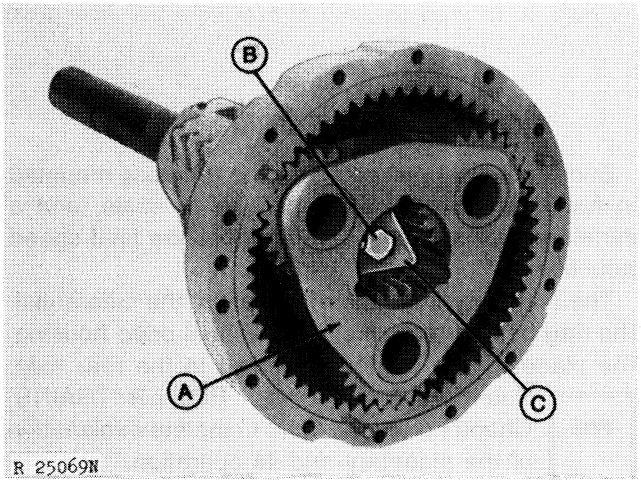

A—Planetary Carrier
B—Special Cap Screw
C—Lock Plate

Fig. 3-Removing Lock Plate

3. Slightly loosen special cap screw (B, Fig. 3) and remove lock plate (C) from the screw head.

4. Remove cap screw (B).

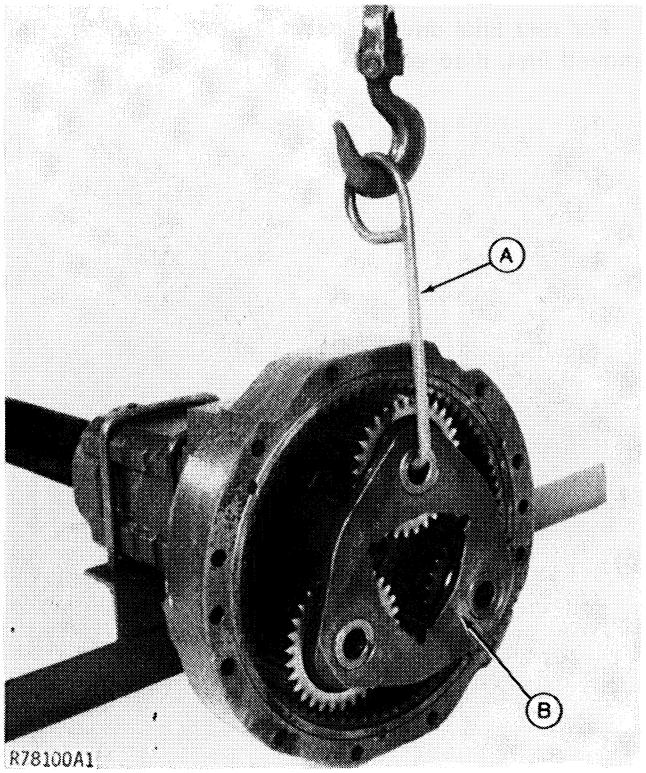

A—Removal Hook
B—Planetary Carrier

Fig. 4-Removing Planetary Using Hook Tool

5. Install planetary removal hook (A, Fig. 4) in I.D. of a pinion shaft and remove carrier assembly (B) from housing using an overhead hoist.

6. Remove thrust washer and shims (22 and 23, Fig. 5) from housing.

7. Expand large snap ring (20) enough to remove each planet pinion shaft. Do not lose rollers (16).

8. Examine sun pinion shaft (28) for wear and damage.

a) If teeth are slightly pitted, reverse the final drives. (Planetary assemblies can be reversed without reversing remainder of axle assembly.)

b) If teeth are heavily pitted or chipped, replace the sun pinion shaft. (If pitted area exceeds 1/3 of the surface of tooth contact, teeth are heavily pitted.)

NOTE: All 8430 Tractors and 8630 Tractors (- 4324) use 3.622 in. (92 mm) diameter axles on both the front and rear assemblies. Some axle assemblies may have been modified to use undersize outer bearing cones on both the front and rear, and undersize inner bearing cones on the rear axle. These axles are marked (*) on the end of the shaft. The identification mark is 1/2 in. (13 mm) wide.

8630 Tractors (4325-) use 3.937 in. (100 mm) diameter axles on both the front and rear assemblies. Later 8630 Tractors (7843-) use a further improved assembly. See Specifications in Group 40 for the basic differences. See the Tractor Parts Catalog for further information.

*102 used on 8630 Tractor (7843-).

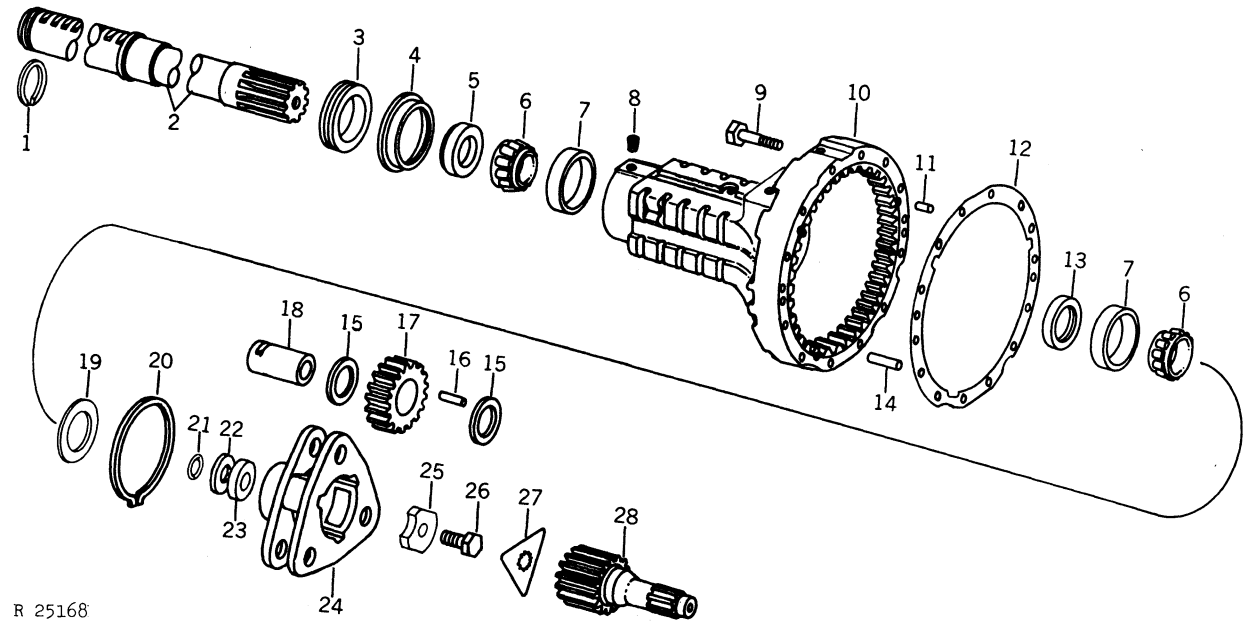

1—Snap Ring
2—Rear Axle Shaft
3—Oil Seal
4—Oil Seal Cup
5—Bearing Spacer
6—Bearing Cone
7—Bearing Cup
8—Pipe Plug
9—Cap Screw (14 used)
10—Rear Axle Housing With Gear
11—Dowel Pin
12—Gasket
13—Oil Seal
14—Dowel Pin
15—Thrust Washer
16—Roller Bearing (126 used)*
17—Planet Pinion (3 used)
18—Planet Pinion Shaft
19—Thrust Washer
20—Snap Ring
21—O-Ring (Discard)
22—Shim, 0.003, 0.005, 0.020-inch (0.08, 0.13, 0.51 mm) (use as required)
23—Thrust Washer
24—Planet Pinion Carrier
25—Washer
26—Special Cap Screw
27—Lock Plate
28—Final Drive Pinion and Shaft

Fig. 5-Rear Final Drive Parts

DISASSEMBLY AND REPAIR—Continued

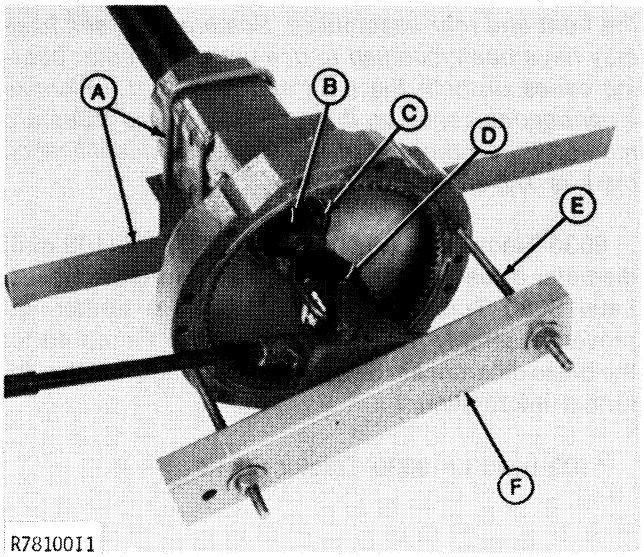

A—Housing Support Tool
B—Axle Shaft
C—Inner Bearing Cone
D—Hydraulic Jack
E—Tool Screw
F—Jacking Tool

Fig. 6-Removing Axle Shaft

9. Remove axle shaft (B, Fig. 6) pressing shaft through inner bearing (C) and housing. Use jacking tool (F) as shown or install an old cap screw in end of shaft (bottom screw in hole) and drive shaft out using a hammer on the end of the screw.

10. Remove inner cup and oil seal from axle housing.

11. Remove outer bearing cup and seal cup from axle housing.

12. Inspect planet pinion shafts for scoring or wear. See Group 40 for specifications.

13. Inspect pinion shaft thrust washers (Q, Fig. 8). Washer thickness is 0.036 in. (0.91 mm).

14. Inspect bearing rollers (R, Fig. 8). Replace as a set. Roller O.D. on the final drives is given in Group 40.

15. Check I.D. of planet pinions (S) for scoring or wear.

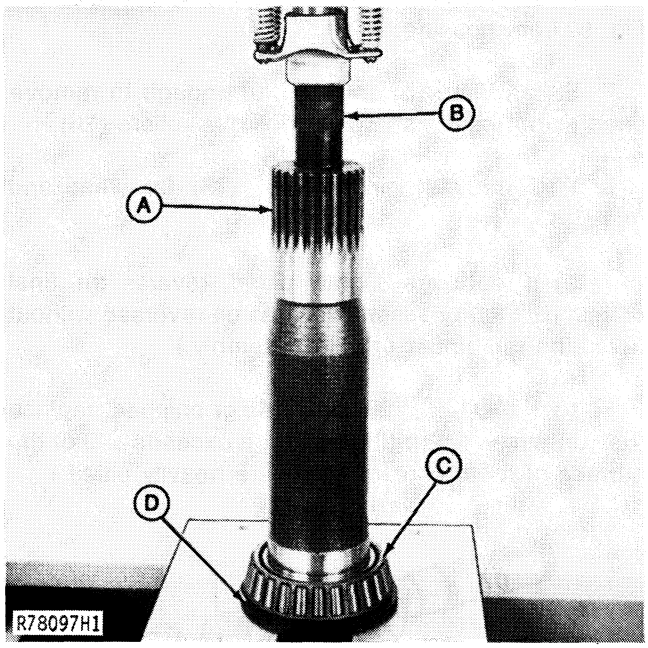

A—Axle Shaft
B—Press
C—Outer Bearing Cone
D—Outer Oil Seal

Fig. 7-Removing Outer Cone and Bearing Spacer

16. Remove outer bearing cone (C, Fig. 7), spacer and oil seal by pressing on bearing spacer.

17. Inspect bearing spacer (C, Fig. 8) I.D. of spacer is given in Group 40.

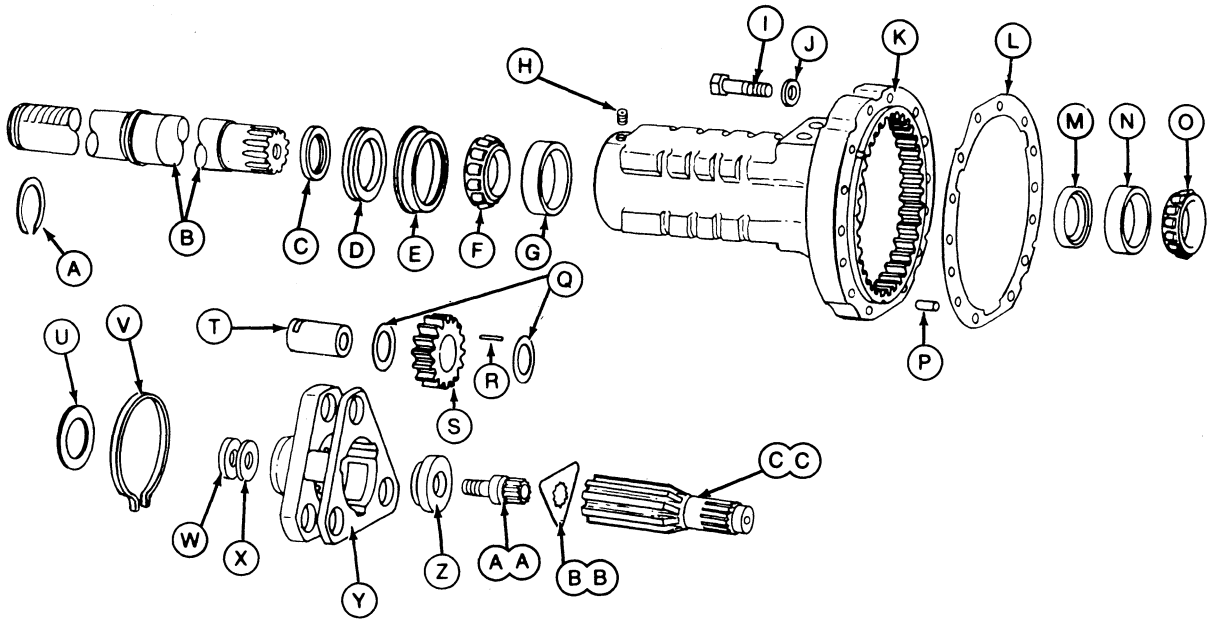

A—Snap Ring
B—Axle Shaft
C—Bearing Spacer
D—Outer Seal
E—Outer Seal Cup
F—Outer Cone
G—Outer Cup
H—Pipe Plug
I—Cap Screw
J—Washer (Front Axle Only)
K—Axle Housing
L—Gasket
M—Inner Seal
N—Inner Cup
O—Inner Cone
P—Dowel Pin (6 used)
Q—Thrust Washer (6 used)
R—Roller Bearings (24 used on each shaft)
S—Planet Pinion (3 used)
T—Pinion Shaft (3 used)
U—Thrust Washer
V—Snap Ring
W—Thrust Washer
X—Shims
Y—Pinion Carrier
Z—Retainer
AA—Special Cap Screw
BB—Lock Plate
CC—Sun Pinion Shaft

Fig. 8-Front Final Drive Parts

18. Inspect bearing cones and axle shaft at cone diameter for scoring or wear. See Group 40 for specifications.

19. Inspect bearing cups. See Group 40 for specifications.

20. If outer bearing on 92 mm axle shaft is loose on shaft, modify the shaft as directed on the following page.

REPAIR—Continued

Modifying 92 mm Axle Shaft For Undersize Bearings

1. Grind the front axle (A, Fig. 9) as shown in the upper half of the illustration.

NOTE: Use a crankshaft grinder capable of a 48 in. (1219 mm) length.

2. Grind the rear axle (G) as shown in the lower half of the illustration.

3. Use a punch to mark the outer end of the shaft as shown (E) for identification.

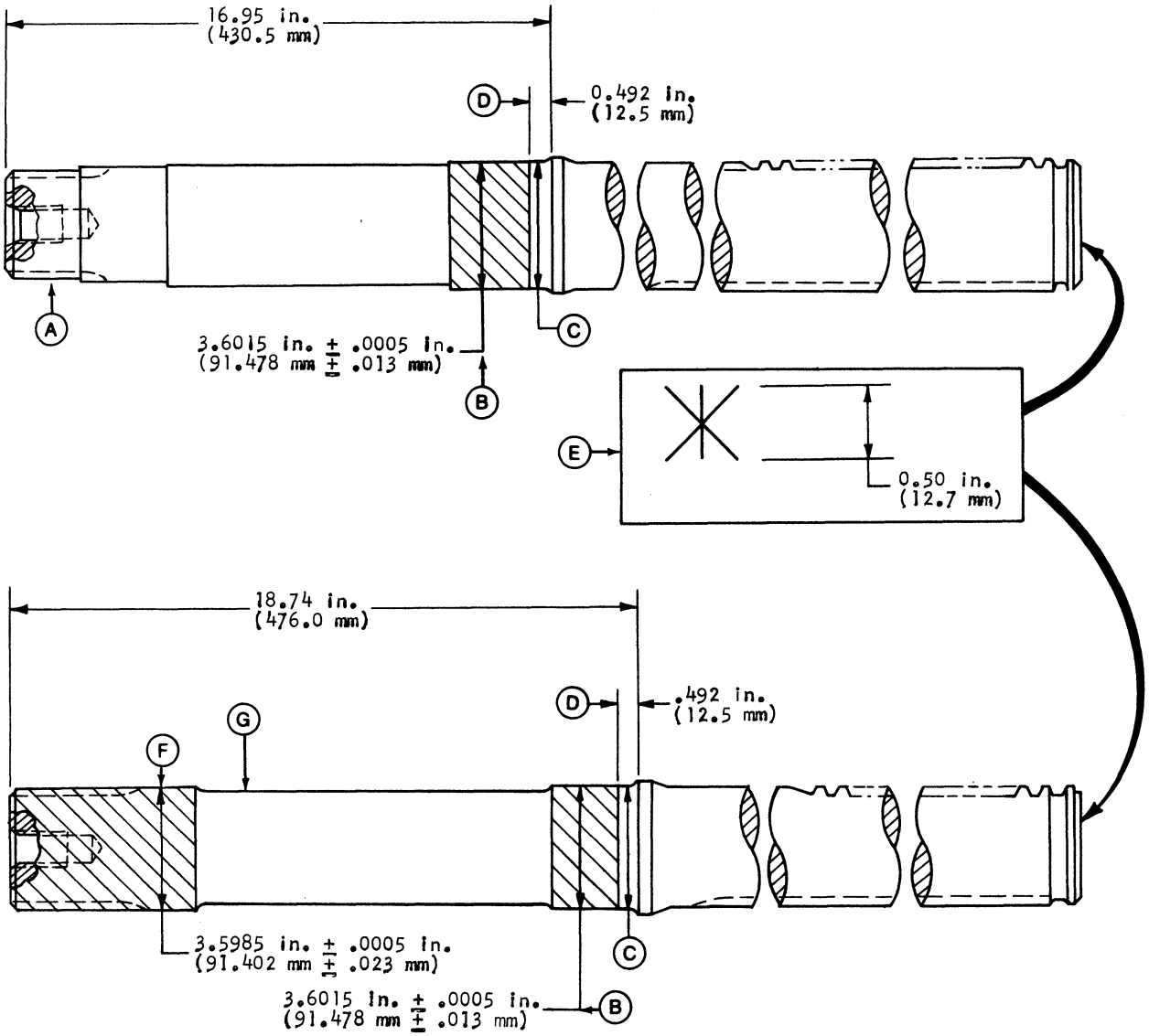

R32307

A—Front Axle Shaft
B—Grind Concentric With Diameter (C) Within 0.005 in. (0.125 mm) TIR
C—Concentricity Diameter
D—Do Not Grind
E—Identification Mark
F—Grind Concentric With Original Diameter Within 0.005 in. (0.125 mm) TIR
G—Rear Axle Shaft

Fig. 9-Modifying Bearing Journals For Undersize Bearing Cones (92 mm Axles Only)

Litho in U.S.A.

ASSEMBLY AND ADJUSTMENT

A—Planet Pinion
B—Roller Bearings
C—Pinion Shaft
D—Thrust Washers
E—Planetary Carrier
F—Snap Ring

Fig. 10-Assembling Front Planetary

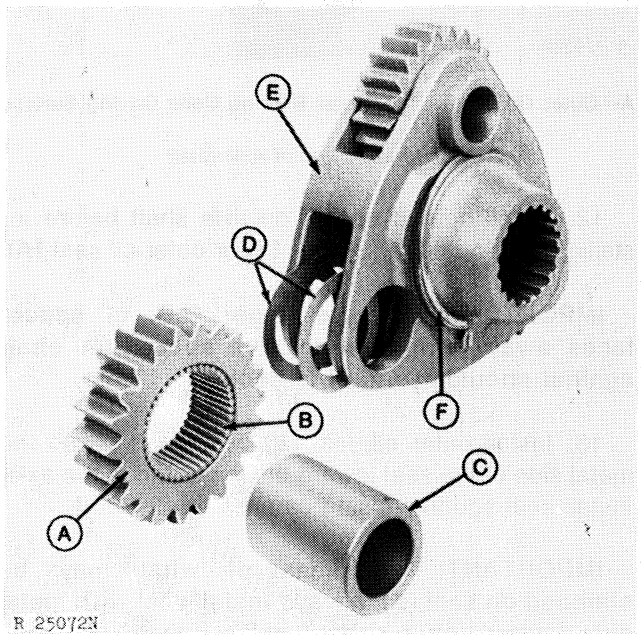

A—Planet Pinion
B—Roller Bearings
C—Planet Pinion Shaft
D—Thrust Washers
E—Carrier
F—Snap Ring

Fig. 11-Assembling Rear Planetary Carrier

1. Coat I.D. of planet pinions with a light layer of grease and assemble roller bearings in pinions (A, Fig. 10 or 11).

2. Position planet pinion shaft thrust washers (D) on each side of planet pinion. Dip shaft in oil and install in carrier bore through planet pinion. Note that snap ring groove on shaft must face center of carrier (E).

3. Install two of the three planet pinions in carrier. Seat snap ring in groove and be sure it is positioned to retain the shaft (C).

4. Install retainer (Z, Fig. 8) in center of carrier with depressed side of retainer facing away from end of axle shaft.

5. Install remaining planet pinion and shaft (C, Fig. 10 or 11).

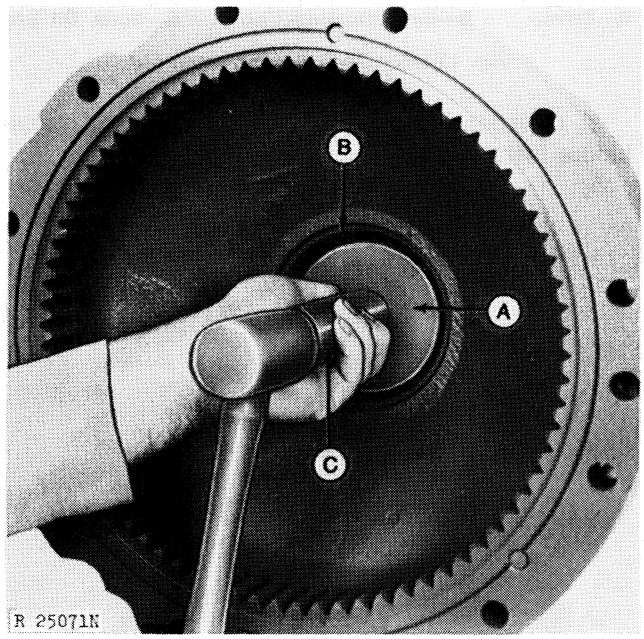

A—Driving Disks
B—Bearing Cup
C—Driver Handle

Fig. 12-Installing Inner Oil Seal

6. Install inner bearing cup (B, Fig. 12) into housing tight against the housing shoulder.

7. Install inner oil seal into housing so it bottoms tight in its bore. Be sure sealing lip spring faces driver.

ASSEMBLY AND ADJUSTMENT —Continued

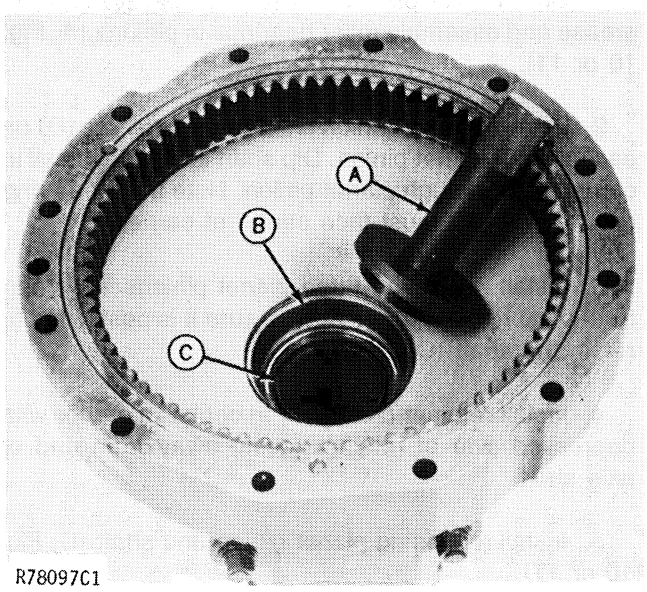

A—Driver B—Inner Bearing Cup C—Inner Oil Seal

Fig. 13-Inner Oil Seal and Bearing Cup

8. Coat inner oil seal (C, Fig. 11) lip with grease before installing axle.

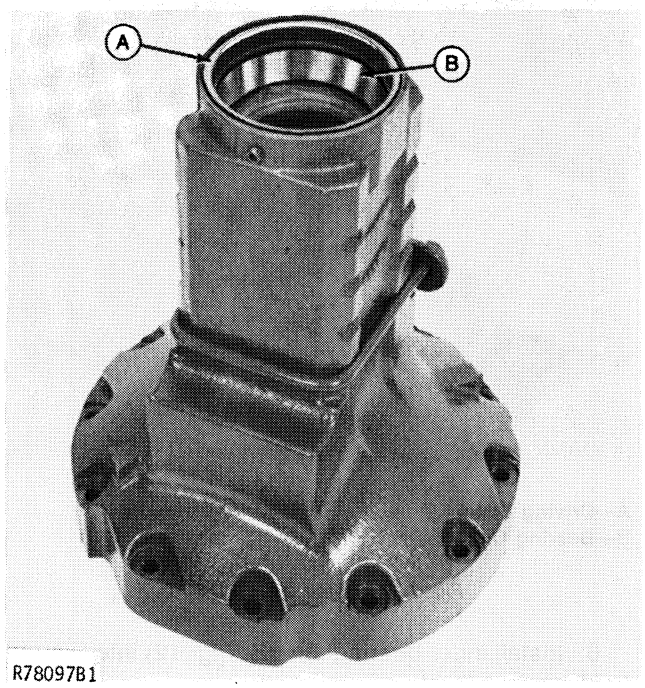

A—Outer Seal Cup B—Outer Bearing Cup

Fig. 14-Installing Outer Cups

9. Install outer bearing cup (B, Fig. 14) in housing tight against bore shoulder.

10. Install outer seal cup (A) tight against outer face of housing.

11. Heat axle bearing spacer to 300°F (150°C).

CAUTION: If hot oil is used to heat parts, remember that oil fumes or oil can ignite above 380°F (193°C). Use a thermometer and do not exceed 360°F (182°C). Do not allow a flame or heating element to be in direct contact with the oil. Heat the oil in a well-ventilated area. Plan a safe handling procedure to avoid burns.

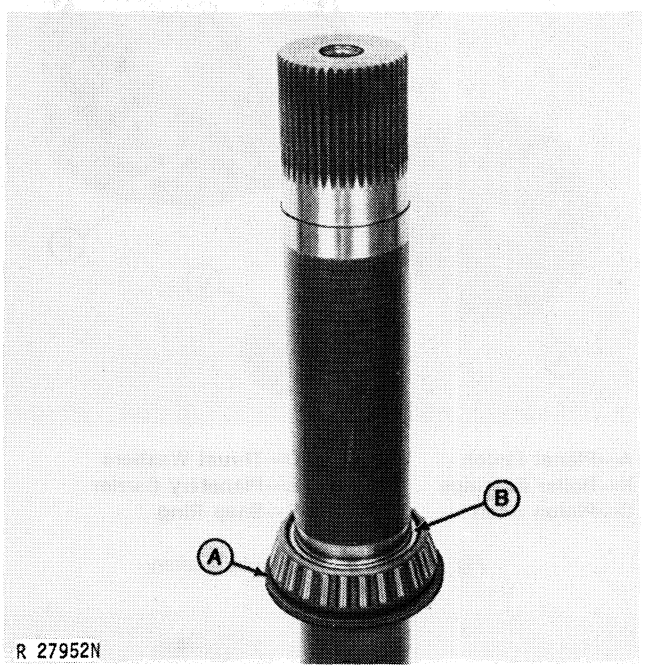

A—Outer Oil Seal B—Outer Bearing Cone Driving Surface

Fig. 15-Inner End of Axle Shaft

12. Install heated spacer on axle shaft before installing bearing cone (B, Fig. 15) or outer oil seal (A).

IMPORTANT: Be sure larger O.D. of spacer faces away from driver. Drive spacer on shaft against shoulder until it is cool.

13. Install outer oil seal (A) over spacer with the metal side of the seal toward the inner end of the axle. Install seal squarely using care not to distort it.

IMPORTANT: Regardless of what may be stamped on seal (A), always install seal with metal side toward inner end of axle shaft. If seal has metal on both sides, follow the directions stamped on the seal.

Litho in U.S.A.

14. Coat oil seal (A) with SAE Multi-Purpose Grease or its equivalent.

15. Heat outer bearing cone (B) to 300°F (150°C) **maximum** and install on shaft tight against spacer.

16. Drive or press cone and spacer (after cool) to reseat assembly against axle shoulder. Lightly oil the bearing. Do not grease at this time.

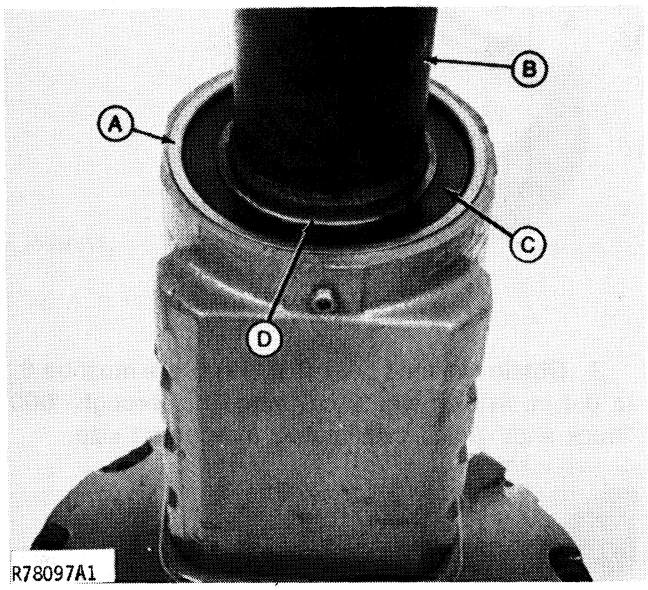

A—Seal Cup **C—Outer Seal**
B—Axle Shaft **D—Bearing Spacer**

Fig. 16-Installing Axle Shaft

17. Install axle (B, Fig. 16) with bearing cone, spacer (D) and seal (C) in axle housing.

18. Install special cap screw (AA, Fig. 8) through retainer (Z) in planetary assembly. Do not install washer or shims at this time.

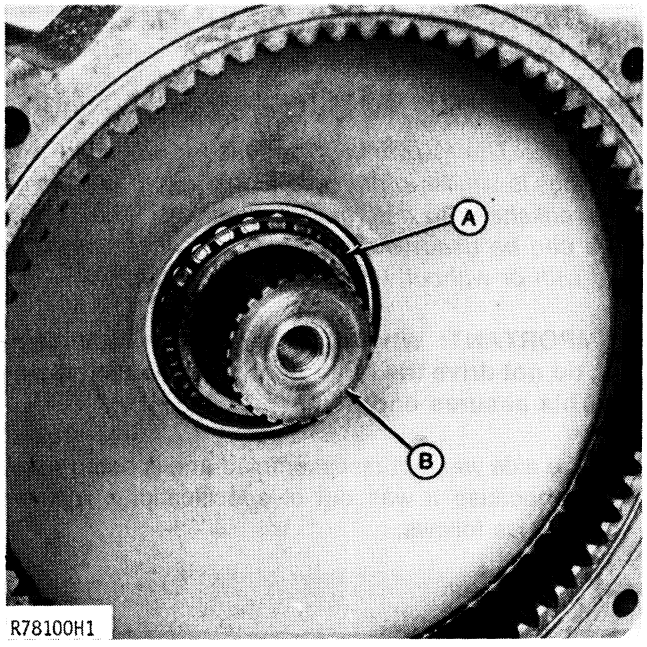

A—Inner Bearing Cone **B—Axle Shaft**

Fig. 17-Installing Inner Bearing Cone

19. Heat inner bearing cone (A, Fig. 17) to 300°F (150°C) **maximum** and install on shaft (B). **Do not** drive the bearing cone all the way on. This assures end play.

ASSEMBLY AND ADJUSTMENT —Continued

Adjusting Axle Bearings

NOTE: The following procedure for adjusting axle bearings is similar in principle to the use of plastigage on crankshafts to determine clearances. The procedure can be used with the axle vertical or horizontal and with or without wheel equipment installed.

IMPORTANT: When setting up an axle assembly, do not drive the inner bearing cone all the way in. This assures end play.

If the axle was not disassembled and is being readjusted because it was out of specifications, achieve end play as follows.

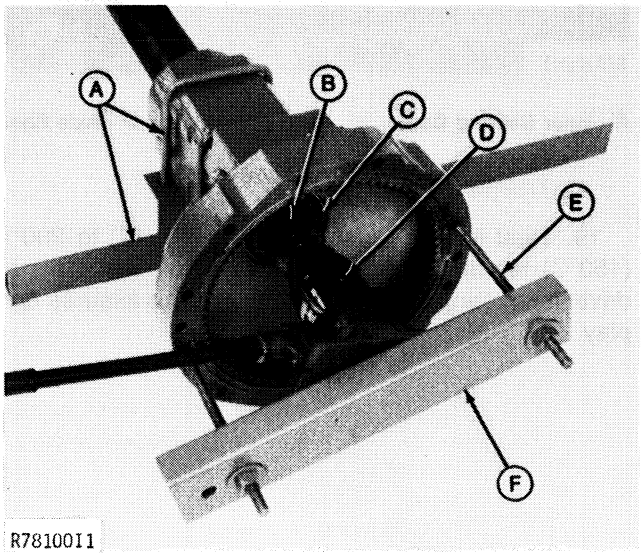

A—Support Tool
B—Axle Shaft
C—Inner Bearing
D—Hydraulic Jack
E—Support Tool Screws
F—Jacking Tool

Fig. 18-Creating Axle Bearing End Play

1. If axle housing has not been disassembled, remove planetary assembly as instructed on page 1 and 2.

2. If the axle bearings do not have end play, press the axle out by positioning the jacking tool as shown and pulling the housing inward. The axle may also be driven out by driving on an old cap screw which is bottomed in the axle cap screw hole.

NOTE: Axle housing should be supported by the wheel or by the support tool (A, Fig. 18) throughout the remainder of the adjustment procedure.

Fig. 19-Checking Lead Ball Size

3. Obtain two lead balls (Fig. 19). Balls must be 0.3 to 0.4 in. in diameter (8-10 mm). "1" through "000" "buck shot" are approximately the correct size.

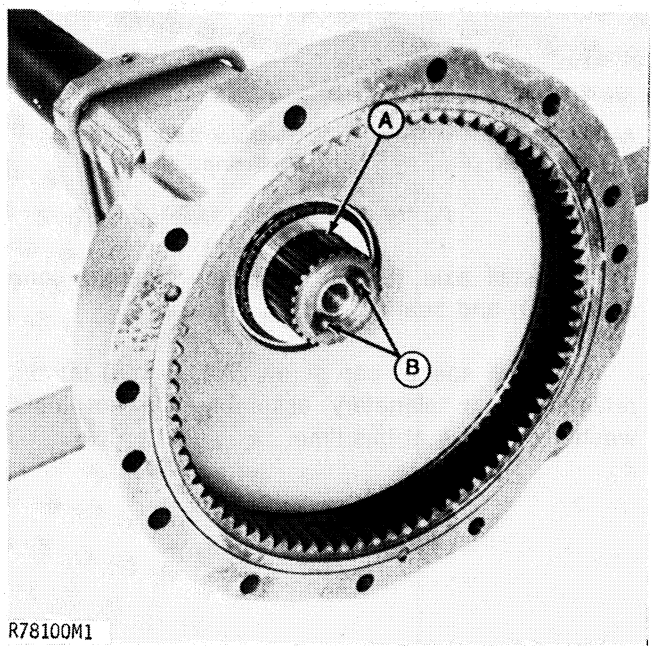

A—Bronze Thrust Washer
B—Lead Balls

Fig. 20-Lead Balls in Place

4. Install bronze thrust washer (A, Fig. 20) on shaft against the inner bearing.

5. Use a heavy grease to position the lead balls (B) on the end of the axle shaft approximately 180° apart on each side of cap screw hole. Use grease generously to keep balls in place.

Litho in U.S.A.

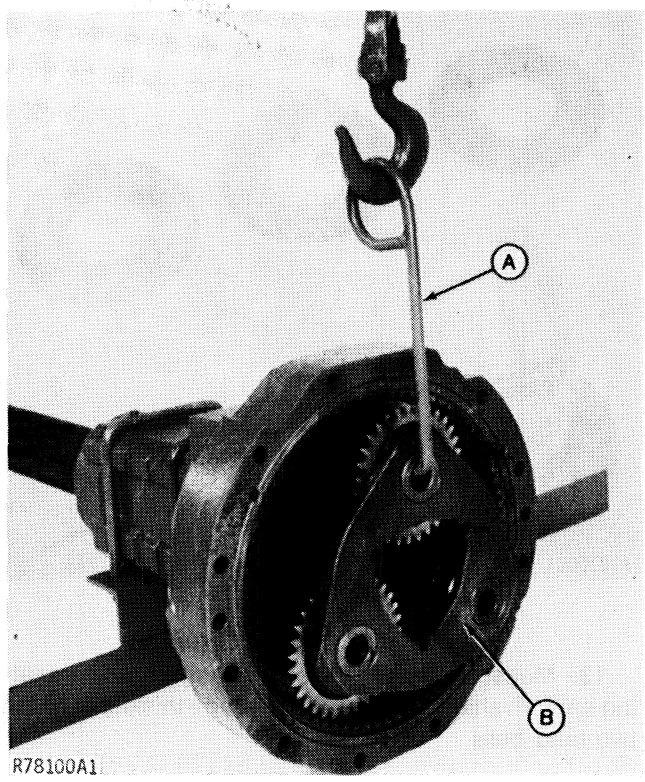

A—Installation Hook Tool **B—Planetary Assembly**

Fig. 21-Installing Planetary Assembly

6. Install planetary assembly (B, Fig. 21) in place in housing using hook (A).

IMPORTANT: The bronze thrust washer must be in place at this time. Shims and shim washer must not be installed.

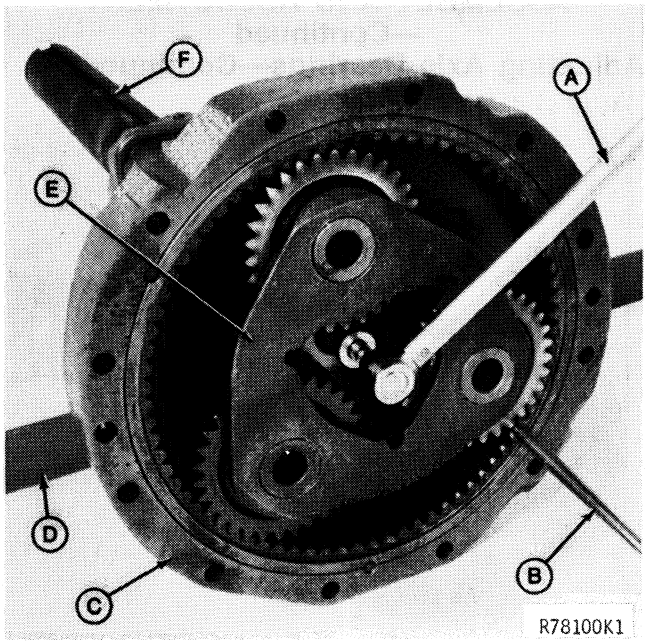

A—Torque Wrench **D—Support Tool**
B—Bar **E—Carrier**
C—Axle Housing **F—Axle Shaft**

Fig. 22-Torquing Planetary-to-Axle Cap Screw

7. Install a bar (B, Fig. 22) as shown and torque the carrier-to-axle cap screw to 200 ft-lbs (271 Nm) (27.1 kgm). Remove bar (B).

8. Rotate the carrier (E) and axle shaft (F) five times in each direction. If assembly is mounted on the wheel, rotate the axle housing.

9. Reinstall bar (B) and retorque the carrier-to-axle cap screw to 200 ft-lbs (271 Nm) (27.1 kgm).

10. Loosen the cap screw with the bar on the opposite side of the planet pinion as shown.

11. Remove the planetary assembly as shown in Fig. 21.

ASSEMBLY AND ADJUSTMENT —Continued

Adjusting Axle Bearings—Continued

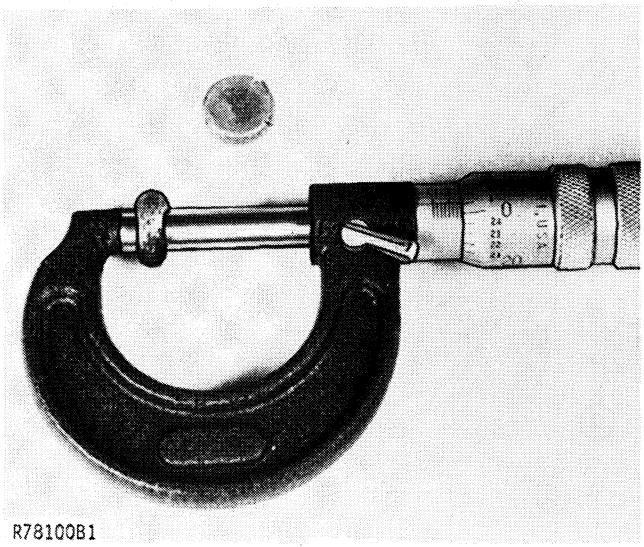

Fig. 23-Measuring Ball Thickness

12. Measure the thickness of the two lead balls (Fig. 23). Measure near the center of each ball. The average thickness (total of both divided by 2) is equal to the required shim pack.

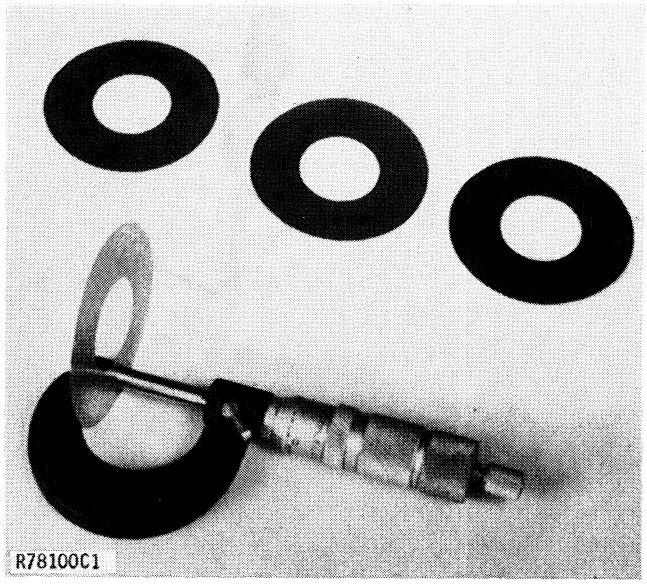

Fig. 24-Measuring Shims

13. Measure shims and shim washers accumulating enough shims to equal the average thickness of the two lead balls.

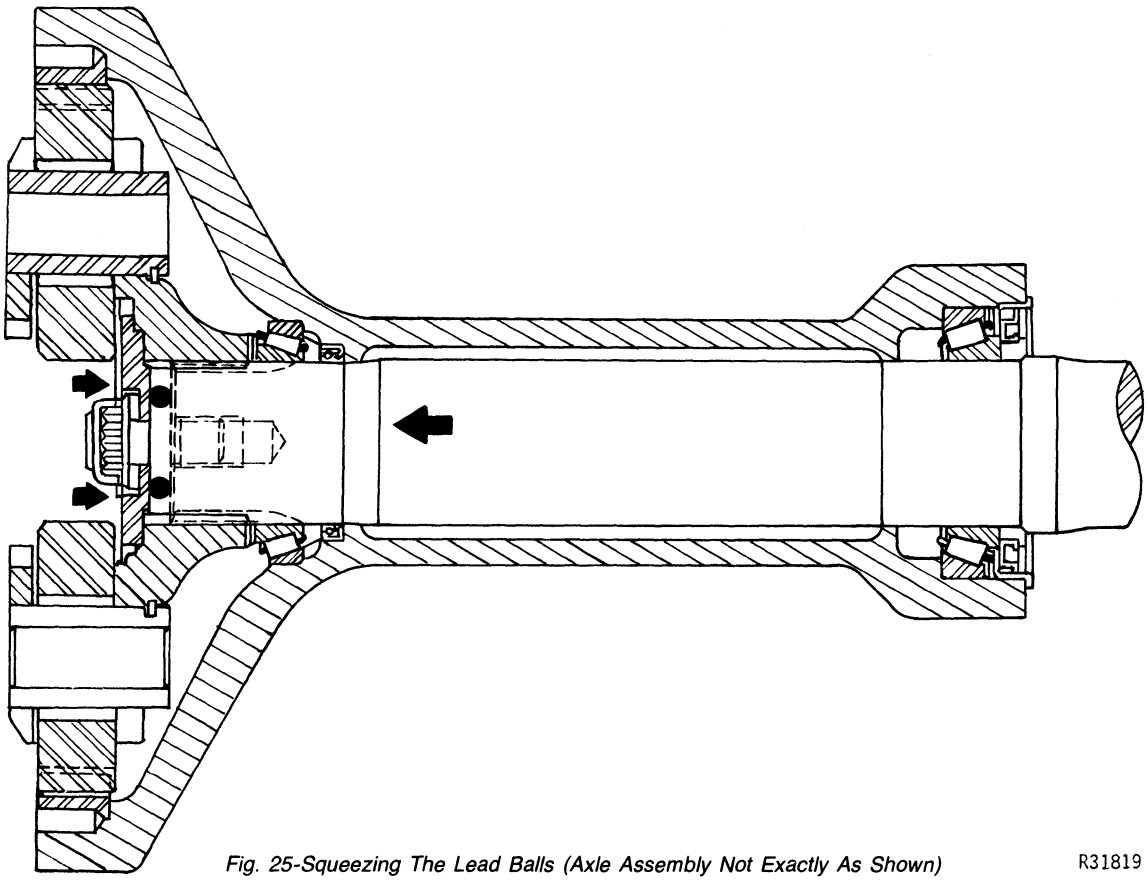

Fig. 25-Squeezing The Lead Balls (Axle Assembly Not Exactly As Shown) R31819

IMPORTANT: Measure shims individually. Shims are available in nominal thicknesses of 0.003, 0.005 and 0.020 in. (0.076, 0.127 and 0.508 mm). One shim washer is usually installed. Washer thickness is 0.060 in. (1.524 mm). Shims must be measured individually since they vary considerably from the nominal thickness. Also a stack of shims will not compress enough under proper micrometer use to obtain an accurate measurement.

Rolling Drag Torque

IMPORTANT: The torque specified seats the axle bearings and provides the specified drag torque while flattening the lead balls. The thickness of the lead balls is the correct shim pack. If excessive shim pack is installed (Fig. 26), a gap is created between the inner cone and planetary carrier. Since the bearings have a tight fit on the axle shaft, an accurate rolling drag torque cannot be read.

Rolling drag torque will be within specification but after the final drive unit is operated on the tractor the inner bearing will work inward against the planetary carrier.

This result of excessive shim pack will lead to early bearing failure. To avoid this possibility of error, drive or press the shaft out to achieve end play before installing shims and carrier.

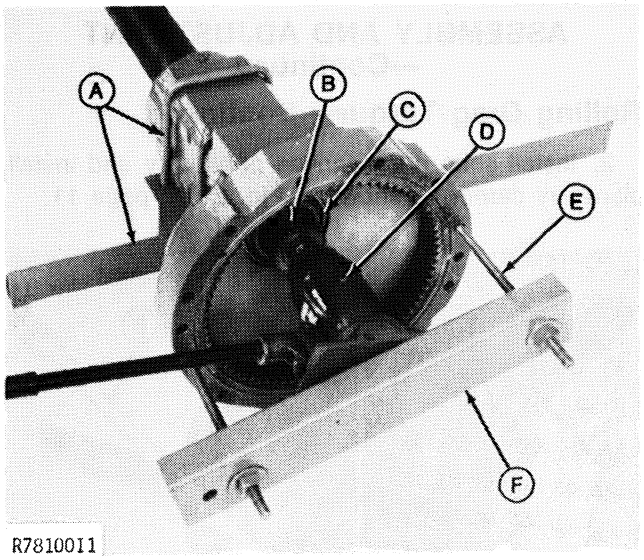

A—Housing Support
B—Axle Shaft
C—Inner Bearing
D—Hydraulic Jack
E—Screws
F—Jacking Tool

Fig. 27-Creating Bearing End Play

1. Press or drive the axle shaft outward to create bearing end play.

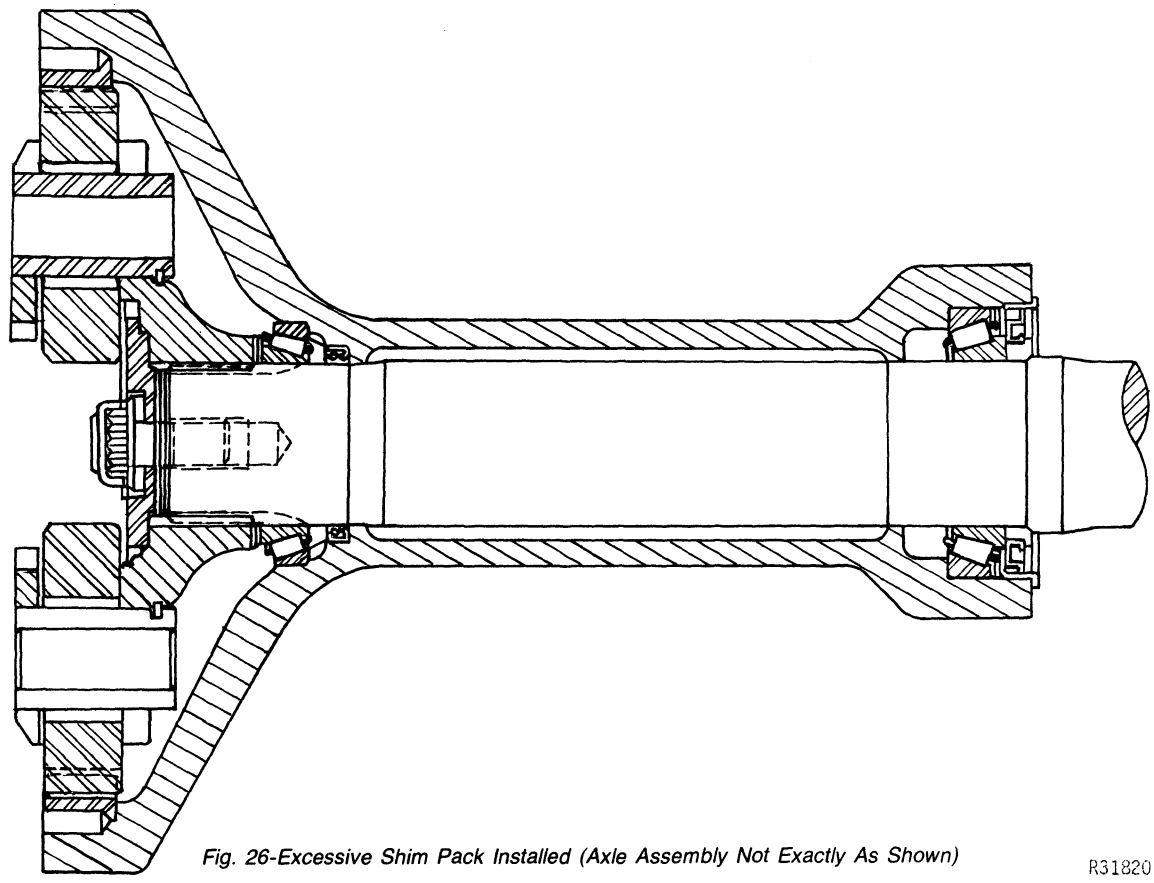

Fig. 26-Excessive Shim Pack Installed (Axle Assembly Not Exactly As Shown)

R31820

ASSEMBLY AND ADJUSTMENT —Continued

Rolling Drag Torque—Continued

2. Install shim pack derived previously and install planetary carrier as shown in Fig. 21 on page 11.

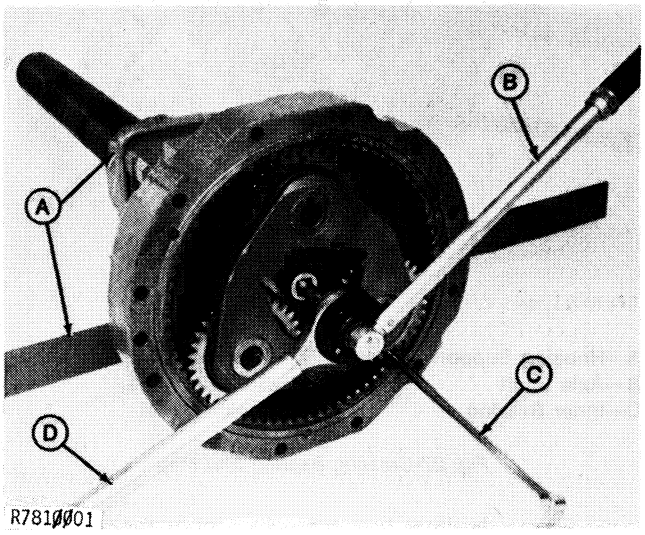

A—Axle Support
B—Torque Wrench
C—Bar
D—JDST-38 Torque Multiplier

Fig. 28-Torquing Planetary Cap Screw

3. Torque the planetary cap screw as shown in Fig. 28 to 580 ft-lbs (786 Nm) (78.6 kgm).

NOTE: Since torque specification is high, the use of JDST-38 Torque Multiplier (D, Fig. 28) is advised. The Multiplier has a 4 to 1 ratio. Set the torque wrench (B) to 145 ft-lbs (197 Nm) (19.7 kgm).

4. Rotate the axle and carrier five times in each direction to insure proper seating of the bearing rollers.

NOTE: If axle housing is mounted on its wheel, rotate the final drive housing five times in each direction.

IMPORTANT: Be sure axle housing support (A) prevents the axle from dragging on the floor giving a false rolling drag torque reading.

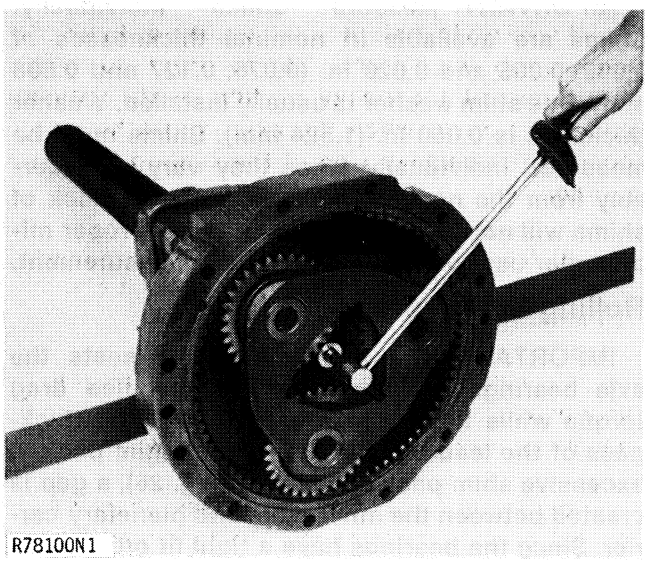

Fig. 29-Checking Rolling Drag Torque With Wheel Removed

5. Check rolling drag torque using a bending bar torque wrench (Fig. 29) on the carrier cap screw if wheel is removed. Read the torque wrench while evenly turning the axle and carrier with the wrench. Rolling drag torque must be 10 to 23 ft-lbs (13-31 Nm).

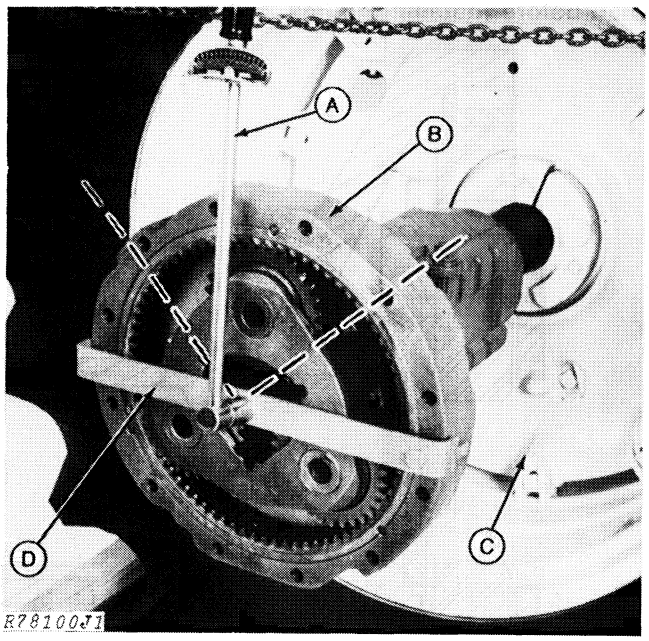

A—Torque Wrench
B—Axle Housing
C—Wheel
D—Housing Adapter

Fig. 30-Checking Rolling Drag Torque (Wheel Installed)

6. If wheel equipment is installed, attach the housing adapter (constructed in Group 40) to the housing flange holes (180° apart).

IMPORTANT: Axle housings are not symmetrical. To obtain an accurate rolling drag torque measurement the heavy portion of the housing must face down when the axle is in a horizontal position. The heavy side of the casting has a flat surface.

a) If axle is in a horizontal position install housing adapter (D, Fig. 30) so the heavy portion of the housing (B) is down.

b) Install housing adapter so it is parallel to the floor and install bending bar torque wrench (A) so the handle points straight up or straight down.

c) Rotate the housing and housing adapter 45° in each direction and record rolling drag torque. Average the results. Rolling drag torque must be 10 to 23 ft-lbs (13-31 Nm).

7. If rolling drag torque is not within specifications, the adjustment and assembly procedure must be repeated.

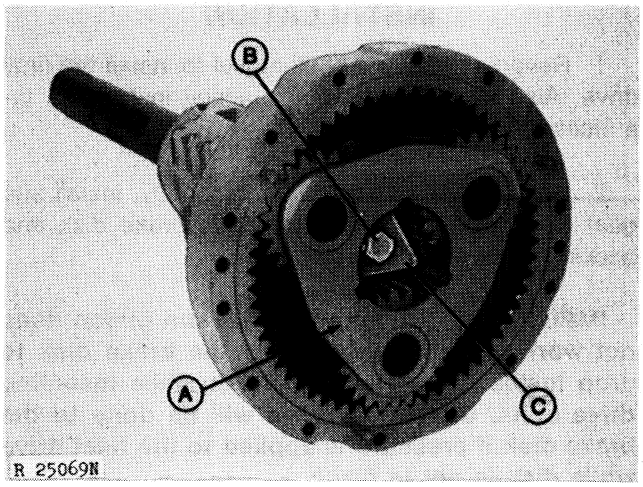

A—Planetary Carrier **C—Lock Plate**
B—Special Cap Screw

Fig. 31-Installing Lock Plate

8. Install lock plate (C, Fig. 31). If plate will not fit tightly by turning over, tighten the special cap screw (B) 8° maximum to keep the plate from falling out of position.

9. Install grease fitting in outer part of housing and fill outer bearing and oil seal compartment with grease. Remove grease fitting and install pipe plug securely.

INSTALLATION

1. Reverse the steps of Removal to install the final drive. Also note the following special installation instructions.

2. When installing final drive assembly, install sun gear in differential. Install rear drive brake disk and backing plate on sun gear.

IMPORTANT: Be sure that the sun pinion does not work out enough to allow the brake disk to drop inside the sun pinion teeth while installing drive units. Serious damage will be done to the brake disk if pressure is applied to the final drive while disk is not in place.

3. Torque rear axle housing-to-transmission case cap screws to 170 ft-lbs (230 Nm) (23 kgm).

4. Torque front axle housing-to-differential case cap screws with washers to 240 ft-lbs (325 Nm) (32.5 kgm).

5. Fill front differential and final drives as instructed in Group 30 of this Section.

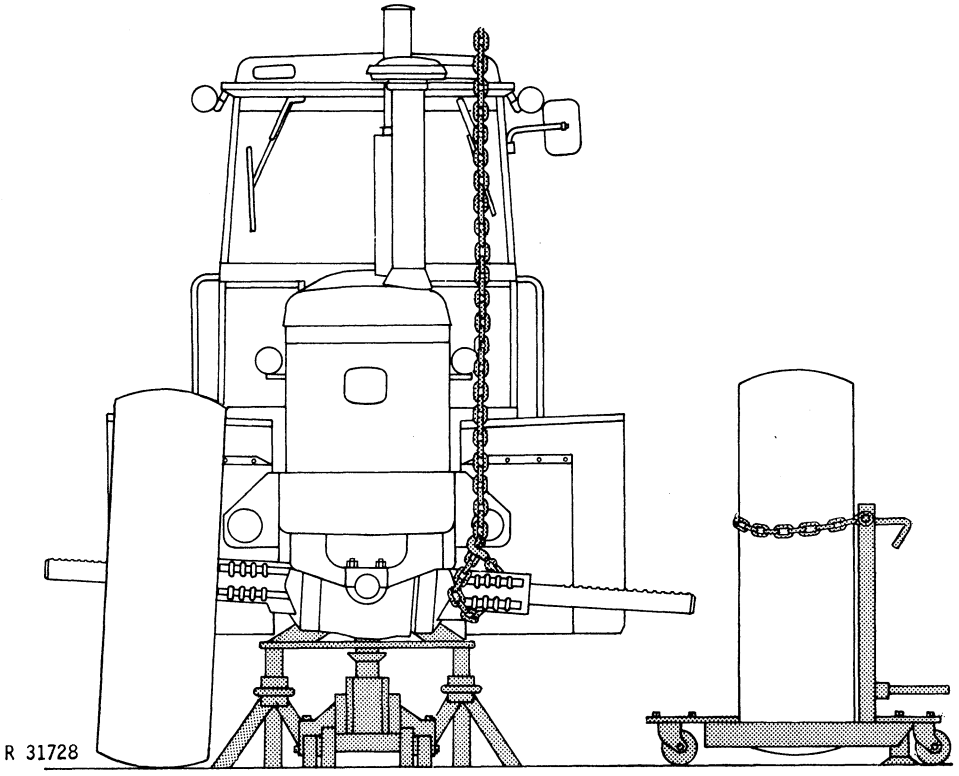

Fig. 32-Removing or Installing Front Final Drive without Removing Differential

Group 40
SPECIFICATIONS AND SPECIAL TOOLS

SPECIFICATIONS

Item and Measurement	New Part Dimension	Wear Tolerance
Perma-Clutch		
Transmission Clutch Shaft		
O.D. at flywheel bushing	0.9995 to 1.0005 in. (2.5387 to 2.5413 cm)	
O.D. at PTO drive gear	1.779 to 1.789 in. (4.518 to 4.544 cm)	
PTO Clutch Shaft		
O.D.	2.240 to 2.242 in. (5.690 to 5.695 cm)	
I.D.	2.229 to 2.239 in. (5.661 to 5.687 cm)	
Clutch Operating Piston		
O.D.	3.958 to 3.968 in. (10.053 to 10.079 cm)	
I.D.	2.7090 to 2.7110 in. (6.8805 to 6.8855 cm)	
Clutch Operating Piston Sleeve		
O.D. at piston housing	4.9560 to 4.9580 in. (12.5875 to 12.5925 cm)	
I.D.	4.0300 to 4.0320 in. (10.2365 to 10.2415 cm)	
Operating Piston Housing Bore at Operating		
Piston Sleeve	4.960 to 4.962 in. (12.508 to 12.603 cm)	
I.D. at piston surface	2.705 to 2.707 in. (6.871 to 6.876 cm)	
Lubrication Reduction Valve		
Length	3.78 in. (9.60 cm)	
O.D.	0.6850 to 0.6860 in. (17.399 to 17.425 mm)	
Lubrication Reduction Valve Spring		
Approximate free length	1.85 in. (4.7 cm)	
Compressive load at 0.91 in. (2.3 cm)	9.3 to 11.3 lbs. (41.4 to 50.3 N)	
Clutch and PTO Valve		
Approximate free length - upper spring	1.094 in. (27.79 mm)	
Compressive load at 0.594 in. (15.09 mm)	10.8 to 13.2 lbs (48 to 58.7 N)	
Approximate free length - lower spring	2.28 in. (57.9 mm)	
Compressive load at 1.84 in. (46.7 mm)	52.2 to 63.8 lbs. (232 to 283.8 N)	
Clutch Springs (dyed red) 8430-after 004258; 8630-after 005760		
Approximate free length-upper spring	2.10 in. (53.3 mm)	
Compressive load at 2.05 in. (52.1 mm)	8.6-10.6 lbs (3.9-4.8 kg)	
Approximate free length-lower spring	1.13 in. (28.7 mm)	
Compressive load at 0.61 in. (15.5 mm)	14.4-17.6 lbs (6.5-8.0 kg)	
Pressure Regulating Valve		
O.D.	0.6840 to 0.6850 in. (17.373 to 17.399 mm)	
Length to tip	2.12 in. (5.38 cm)	
Inner spring free length	5.02 in. (12.75 cm)	
Compressive load at 4.00 in. (10.15 cm)	43.7 to 53.5 lbs. (194 to 238 N)	
Outer spring free length	2.97 in. (7.55 cm)	
Compressive load at 1.63 in. (4.15 cm)	14.7 to 17.9 lbs. (65.4 to 79.6 N)	
Shim thickness	0.030 in. (0.16 mm)	
Filter Relief Valve		
O.D. of valve	0.6840 to 0.6850 in. (17.373 to 17.399 mm)	
Length of valve	1.96 in. (4.98 cm)	
Spring free length	5.90 in. (15.0 cm)	
Compressive load at 4.31 in. (10.95 cm)	23.2 to 28.4 lbs. (103 to 126 N)	
Cooler Relief Valve		
O.D. of valve	0.6840 to 0.6850 in. (17.373 to 17.399 mm)	
I.D. of bore in housing	0.480 to 0.490 in. (12.19 to 12.45 mm)	
Spring free length	5.90 in. (15.0 cm)	
Compressive load at 4.54 in. (11.55 cm)	36.5 to 44.5 lbs. (162 to 198 N)	

Litho in U.S.A.

Item and Measurement	New Part Dimension	Wear Tolerance

Perma-Clutch (Continued)

Transmission Clutch Disks		
Thickness	0.137 to 0.143 in. (3.48 to 3.64 mm)	
Minimum groove depth		0.005 in. (0.127 mm)
Minimum thickness		0.110 in. (2.79 mm)
Clutch Separator Plate Thickness	0.281 to 0.291 in. (7.14 to 7.39 mm)	
Clutch Return Springs		
Approximate free length	2.22 in. (56.4 mm)	
Compressive load at 1.88 in. (47.8 mm)	78.7 to 96.3 lbs. (350.3 to 428.1 N)	
Oil Return Pressure Check Valve		
O.D.	0.6855 to 0.6865 in. (1.7412 to 1.7437 cm)	
Bore in housing	0.6870 to 0.6880 in. (1.7450 to 1.7475 cm)	
Oil Return Pressure Check Valve Spring		
Approximate free length	2.31 in. (5.87 cm)	
Compressive load at 0.75 in. (1.91 cm)	10.8 to 13.2 lbs. (48.0 to 58.7 N)	
Shim for Clutch Oil Pump Drive Gear		
Thickness	0.030 in. (0.76 mm)	
Bushing in Flywheel Clutch Shaft Adapter (8430)		
I.D.	1.0035 to 1.0045 in. (2.5489 to 2.5514 cm)	
Thrust washer in flywheel thickness (8630)	0.185 to 0.189 in. (4.70 to 4.80 mm)	
Clutch Pedal Height Adjustment	5.5 in. (14.0 cm)	
Torque Values		
Pressure regulating valve housing-to-clutch valve housing cap screws	21 ft-lbs. (28 Nm)	
Pressure regulating valve housing-to-clutch housing cap screws	35 ft-lbs. (47 Nm)	
Clutch cover-to-flywheel cap screws	35 ft-lbs. (47 Nm)	
Clutch operating piston sleeve-to-clutch operating housing	60 in-lbs. (6.78 Nm)	
Clutch operating piston housing-to-clutch housing cap screws	35 ft-lbs. (47 Nm)	

Quad-Range Planetary

Clutch Drum Bushing		
I.D.	2.2550 to 2.2580 in. (5.727 to 5.735 cm)	
Low Clutch Piston		
O.D.	5.225 to 5.235 in. (13.271 to 13.297 cm)	
I.D.	2.249 to 2.251 in. (5.690 to 5.740 cm)	
Thickness at disk surface	0.702 to 0.712 in. (1.783 to 1.809 cm)	
Low Clutch Disk		
Number of disks used	7	
Thickness	0.058 to 0.065 in. (1.50 to 1.60 mm)	
Depth of groove-minimum		0.002 in. (0.051 mm)
Low Clutch Separator Plate		
Number used	8	
Thickness	0.055 to 0.065 in. (1.511 to 1.537 mm)	
Clutch Drum-to-Brake Housing		
Thrust washer thickness	0.0560 to 0.0680 in. (1.422 to 1.727 mm)	

Quad-Range Planetary—Continued

Item and Measurement	New Part Dimension	Wear Tolerance
High Brake Piston		
I.D.	6.498 to 6.502 in. (16.46 to 16.56 cm)	
O.D.	7.725 to 7.735 in. (19.621 to 19.647 cm)	
Thickness	0.790 to 0.800 in. (2.006 to 2.032 cm)	
High Brake Disks		
Number of disks used	4	
Thickness	0.087 to 0.093 in. (2.21 to 2.37 cm)	
Depth of groove	0.006 to 0.010 in. (0.15 to 0.25 mm)	0.002 in. (0.05 mm)
High Brake Separator Plate		
Number of plates used	4	
Thickness	0.085 to 0.095 in. (2.16 to 2.42 mm)	
High Brake Piston Return Springs		
Approximate free length	1.16 in. (2.95 cm)	
Compressive load at 0.95 in. (2.41 cm)	13.5 to 16.5 lbs. (60.1 to 73.4 N)	
Two-Speed Control Valve		
Length of valve	2.746 to 2.756 in. (6.975 to 7.025 cm)	
O.D. of valve	0.4977 to 0.4987 in. (1.2641 to 1.2667 cm)	
I.D. of bore in housing	0.4995 to 0.5005 in. (1.2687 to 1.2713 cm)	
Detent spring strength		
Approximate free length	1.06 in. (2.69 cm)	
Compressive load at 0.86 in. (2.18 cm)	12.6 to 15.4 lbs. (56 to 68.5 N)	
Two-Speed Shift Valve		
Length of valve	3.451 to 3.461 in. (8.765 to 8.791 cm)	
O.D. of valve	0.4977 to 0.4987 in. (1.264 to 1.267 cm)	
I.D. of bore in housing	0.4995 to 0.5005 in. (1.269 to 1.271 cm)	
Detent spring strength		
Approximate free length	1.17 in. (2.97 cm)	
Compressive load at 0.83 in. (2.1 cm)	4.5 to 5.5 lbs. (20 to 24.5 N)	
Clutch Shaft Hex. Bushing		
O.D. at large diameter	0.7455 to 0.7665 in. (1.8935 to 1.8961 cm)	
Length	1.32 in. (3.35 cm)	
Spring compressive load at 1.00 in. (2.54 cm)	3.7 to 4.1 lbs. (16.4 to 18.1 N)	
Front Sun Pinion		
Number of teeth-hub end	45	
Number of teeth-gear end	36	
Length	3.70 in. (9.4 cm)	
Front Sun Pinion-to-Low Clutch Drum		
Thrust Washer Thickness	0.0560 to 0.0680 in. (1.422 to 1.727 cm)	
Rear Sun Pinion		
Number of teeth	30	
Depth at thrust surfaces	1.235 to 1.245 in. (3.1369 to 3.1623 cm)	
Rear Sun Pinion-to-Planetary Carrier		
Thrust Washer Thickness	0.0560 to 0.0680 in. (1.4224 to 1.7272 cm)	
Planetary Carrier Rear Bushing		
Length	0.85 in. (2.15 cm)	
I.D. of installed bushing	1.6335 to 1.6355 in. (4.1491 to 4.1542 cm)	
Planetary Carrier Rear Thrust Washer		
Thickness	0.0870 to 0.0990 in. (2.210 to 2.515 cm)	

Item and Measurement	New Part Dimension	Wear Tolerance

Quad-Range Planetary—Continued

Planet Pinion	
Length	3.527 to 3.533 in. (8.958 to 8.974 cm)
I.D.	1.8758 to 1.8764 in. (4.7645 to 4.7661 cm)
Number of teeth	
Small end	24
Large end	26
Planet Pinion Shaft	
Length	4.78 in. (12.1412 cm)
O.D.	1.4996 to 1.5000 in. (3.8090 to 3.8100 cm)
Thrust washer thickness	0.036 in. (0.914 mm)
Planet Pinion Bearing Spacer	
O.D.	1.840 to 1.860 in. (4.675 to 4.725 cm)
Thickness	0.498 to 0.518 in. (12.65 to 13.15 mm)
Clutch Output Yoke	
O.D. at oil seal	2.6250 to 2.6280 in. (6.6709 to 6.6717 cm)
O.D. at bearing	1.9994 to 2.0000 in. (5.0784 to 5.0800 cm)
Clutch Output Yoke Bearing Quill	
I.D. for oil seal	3.7510 to 3.7530 in. (9.5275 to 9.5325 cm)
I.D. for bearing cup	3.6698 to 3.6708 in. (9.3213 to 9.3239 cm)
O.D. of seal	3.7540 to 3.7580 in. (9.535 to 9.545 cm)
Clutch Output Yoke Bearing	
I.D. of cone	2.0017 to 2.0023 in. (5.0843 to 5.0859 cm)
O.D. of cup	3.6718 to 3.6728 in. (9.3263 to 9.3289 cm)
Bearing Lock Nut	
Thickness	0.455 to 0.465 in. (1.155 to 1.181 cm)
Torque	200 ft-lbs. (271 Nm)
Operating pressure for two-speed planetary	170 to 180 psi (1172 to 1241 kPa)
Torque Values	
High brake housing-to-operating piston housing	20 ft-lbs. (27 Nm)
High brake backing plate cap screws	20 ft-lbs. (27 Nm)
Planetary-to-clutch drum cap screws	20 ft-lbs. (27 Nm)
Clutch valve oil line retaining clamp cap screw	35 ft-lbs. (47 Nm)
Rear bearing quill-to-front hinge cap screws	35 ft-lbs. (47 Nm)

Independent PTO

Operating Pressure	170 to 180 psi (1172 to 1241 kPa)	
PTO Idler Gear Shims	0.002, 0.005, 0.010 in. (0.051, 0.127, 0.254 mm)	
PTO Idler Gear End Play	0.003 to 0.005 in. (0.076 to 0.127 mm)	
PTO Clutch Disks		
Number used	6	
Thickness	0.127 to 0.133 in. (3.22 to 3.38 mm)	0.110 in. (2.79 mm)
Depth of groove	0.008 in. (0.203 mm)	0.002 in. (0.051 mm)
PTO Clutch Input Gear		
Shims	0.003, 0.010 in. (0.076, 0.254 mm)	
I.D. of bushing in gear	1.2690 to 1.2700 in. (3.2232 to 3.2258 cm)	
End play setting	0.003 to 0.005 in. (0.076 to 0.127 mm)	

Item and Measurement	New Part Dimension	Wear Tolerance

Independent PTO (Continued)

PTO Separator Plates		
Number used	6	
Thickness	0.088 to 0.092 in. (2.24 to 2.34 mm)	
Configuration	Wavy, notch in one tang	
PTO Clutch Piston		
O.D.	7.377 to 7.387 in. (18.737 to 18.763 cm)	
I.D.	3.974 to 3.978 in. (10.095 to 10.105 cm)	
Piston Return Spring Washers		
Number used	11	
Thickness	0.060 to 0.065 in. (1.528 to 1.648 mm)	
Depth of washer-minimum		0.126 in. (3.20 mm)
Bearing Quill-to-Clutch Thrust		
Washer Thickness	0.056 to 0.068 in. (1.42 to 1.73 mm)	
Output Yoke		
O.D. at drive gear bushing	1.2650 to 1.2660 in. (3.2131 to 3.2157 cm)	
O.D. at rear of clutch drum	1.728 to 1.730 in. (4.367 to 4.417 cm)	
O.D. at rear bearing	1.7720 to 1.7726 in. (4.5008 to 4.5024 cm)	
O.D. at rear seal	2.6250 to 1.6280 in. (6.6709 to 6.6717 cm)	
Clutch Drum I.D. at Rear	1.695 to 1.705 in. (4.305 to 4.331 cm)	
PTO Shaft		
O.D. at bearing	1.9684 to 1.9690 in. (4.9997 to 5.0013 cm)	
O.D. at oil seal	1.937 to 1.939 in. (4.898 to 4.948 cm)	
I.D. of bushing in transmission case wall	1.7490 to 1.7530 in. (4.4443 to 4.4453 cm)	
Torque Values		
PTO shaft rear bearing quill cap screws	85 ft-lbs (115 Nm)	
PTO bearing quill-to-front hinge cap screws	85 ft-lbs (115 Nm)	
Output yoke-to-bearing quill cap screws	35 ft-lbs (47 Nm)	
PTO input gear bearing quill-to-clutch housing cap screws	50 ft-lbs (47 Nm)	
PTO clutch drum backing plate cap screws	20 ft-lbs (27 Nm)	

Torque Divider

Upper Input Shaft		
O.D. at front bearing	1.7510 to 1.7516 in. (4.4475 to 4.4491 cm)	
O.D. at rear bearing	1.6260 to 1.6266 in. (4.1300 to 4.1316 cm)	
O.D. of gear	6.469 to 6.479 in. (16.431 to 16.457 cm)	
End play of shaft	0.001 to 0.005 in. (0.025 to 0.127 mm)	
Shims for adjustment	0.003, 0.005, 0.010, 0.030, 0.048 in. (0.08, 0.13, 0.25, 0.76, 1.22 mm)	
O.D. of oil seal	3.754 to 3.758 in. (9.535 to 9.545 cm)	
Upper Input Idler Shaft		
O.D. at front bearing	1.6260 to 1.6268 in. (41.300 to 41.316 cm)	
O.D. at rear bearing	1.6260 to 1.6268 in. (41.300 to 41.316 cm)	
O.D. of gear	5.6835 to 5.6845 in. (14.424 to 14.450 cm)	
End play on shaft	0.001 to 0.005 in. (0.025 to 0.127 mm)	

Torque Divider—Continued

Item and Measurement	New Part Dimension	Wear Tolerance
Transmission Input Gear		
O.D. at front bearing	2.6260 to 2.6266 in. (6.6700 to 6.6716 cm)	
O.D. at rear bearing	2.1260 to 2.1266 in. (5.4000 to 5.4016 cm)	
O.D. of gear	5.271 to 5.281 in. (13.388 to 13.414 cm)	
End play on gear	0.001 to 0.004 in. (0.025 to 0.102 mm)	
Bearing quill shims available	0.003, 0.005, 0.010 in. (0.76, 0.127, 0.254 mm)	
PTO Input Shaft		
O.D. at front bearing	1.7510 to 1.7516 in. (4.4475 to 4.4491 cm)	
O.D. at rear bearing	2.1260 to 2.1266 in. (5.4000 to 5.4016 cm)	
End play of shaft	0.001 to 0.005 in. (0.025 to 0.127 mm)	
Shims available	0.003, 0.005, 0.010 in. (0.08, 0.13, 0.25 mm)	
PTO Upper Idler Shaft		
O.D. at front bearing	1.6260 to 1.6266 in. (4.1300 to 4.1316 cm)	
O.D. at rear bearing	1.6260 to 1.6266 in. (4.1300 to 4.1316 cm)	
O.D. of gear	7.268 to 7.278 in. (18.460 to 18.486 cm)	
End play of shaft	0.001 to 0.005 in. (0.025 to 0.127 mm)	
Shims available	0.003, 0.005, 0.010, 0.020, 0.048 in. (0.08, 0.127, 0.25, 0.50, 1.22 mm)	
PTO Lower Idler Shaft		
O.D. at front bearing	2.8135 to 2.8141 in. (7.1463 to 7.1479 cm)	
O.D. at rear bearing	2.8760 to 2.8766 in. (7.3050 to 7.3066 cm)	
O.D. of gear	5.624 to 5.634 in. (14.285 to 14.311 cm)	
End play of shaft	0.001 to 0.005 in. (0.025 to 0.127 mm)	
Shims available	0.005, 0.010, 0.048 in. (0.127, 0.254, 1.22 mm)	
PTO Shaft Drive Gear		
O.D. at front bearing	2.6260 to 2.6266 in. (6.6700 to 6.6716 cm)	
O.D. at rear bearing	2.6260 to 2.6266 in. (6.6700 to 6.6716 cm)	
O.D. of gear	7.3984 to 7.4084 in. (18.7916 to 18.8476 cm)	
End play of gear	0.001 to 0.005 in. (0.025 to 0.127 mm)	
Shims available	0.005, 0.010, 0.048 in. (0.127, 0.254, 1.22 mm)	
PTO Brake Piston		
O.D.	6.970 to 6.980 in. (17.704 to 17.729 cm)	
I.D.	4.972 to 4.978 in. (12.628 to 12.644 cm)	
Thickness	1.32 in. (3.35 cm)	
Yoke Adjusting Washers Thickness	0.2500, 0.02477, 0.2454 in. (6.350, 6.292, 6.233 mm)	

Torque Values

Upper input shaft bearing quill cap screws	35 ft-lbs (47 Nm)
Transmission input gear bearing quill cap screws	35 ft-lbs (47 Nm)
Upper idler gear bearing quill cap screws	35 ft-lbs (47 Nm)
PTO upper idler gear bearing quill cap screws	35 ft-lbs (47 Nm)
PTO lower idler gear bearing quill cap screws	35 ft-lbs (47 Nm)
PTO shaft drive gear bearing quill cap screws	35 ft-lbs (47 Nm)
Transmission case-to-torque divider cap screws	300 ft-lbs (407 Nm)
Rear hinge-to-torque divider cap screws	350-400 ft-lbs (475-545 Nm)
Yoke holding nuts	450 ft-lbs (610 Nm)

Litho in U.S.A.

Quad-Range Transmission

Item and Measurement	New Part Dimension	Wear Tolerance
Transmission Drive Shaft		
O.D. at oil pump gear	1.0005 to 1.0015 in. (2.5412 to 2.5438 cm)	
O.D. at rear bearing	1.6260 to 1.6266 in. (4.1300 to 4.1316 cm)	
O.D. at reverse pinion	1.8745 to 1.8755 in. (4.7612 to 4.7638 cm)	
O.D. at reverse collar	2.1815 to 2.1825 in. (5.529 to 5.555 cm)	
O.D. at low range pinion	2.2021 to 2.2031 in. (5.5933 to 5.5959 cm)	
O.D. at high-low collar	2.2695 to 2.2705 in. (5.7645 to 5.7671 cm)	
O.D. at high range pinion	2.5932 to 2.5942 in. (6.5750 to 6.6010 cm)	
O.D. at front bearing	2.1260 to 2.1270 in. (5.4000 to 5.4026 cm)	
End play on shaft	0.004 to 0.006 in. (0.102 to 0.152 mm)	
Shims for adjustment - thickness	0.003, 0.005, 0.010 in. (0.076, 0.127, 0.254 mm)	
Reverse Pinion I.D.	1.8795 to 1.8805 in. (4.7739 to 4.7765 cm)	
Reverse Drive Collar I.D.	2.330 to 2.334 in. (5.917 to 5.928 cm)	
Low Pinion I.D.	2.2071 to 2.2081 in. (5.6060 to 5.6085 cm)	
High-Low Drive Collar	2.2680 to 2.2690 in. (5.7607 to 5.7633 cm)	
High Range Pinion I.D.	2.5982 to 2.5992 in. (6.5994 to 6.6020 cm)	
Synchronizer Disks		
Thickness	0.117 to 0.123 in. (2.97 to 3.12 mm)	0.105 in. (2.67 mm)
Groove Depth	0.006 in. (0.15 mm)	0.002 in. (0.05 mm)
Differential Drive Shaft		
O.D. at rear bearing	2.9895 to 2.9905 in. (7.5933 to 7.5959 cm)	
O.D. at front bearing	2.5000 to 2.5010 in. (6.3500 to 6.3526 cm)	
O.D. for gears	2.9610 to 2.9713 in. (7.521 to 7.547 cm)	
Preload on shaft bearings	0.004 to 0.006 in. (0.102 to 0.152 mm)	
Shims for adjustment - thickness	0.003, 0.005, 0.010 in. (0.076, 0.127, 0.254 mm)	
A-Range Gear Bushing I.D.	2.9945 to 2.9955 in. (7.6060 to 7.6086 cm)	
B,C, and D-Range Gears I.D.	2.9945 to 2.9961 in. (7.6060 to 7.6101 cm)	
Countershaft		
O.D. at front bearing	1.7509 to 1.7515 in. (4.4473 to 4.4488 cm)	
O.D. at rear bearing	1.7509 to 1.7515 in. (4.4473 to 4.4488 cm)	
O.D. at D-Range gear	3.4995 to 3.5005 in. (8.8887 to 8.8913 cm)	
End play of shaft	0.001 to 0.004 in. (0.025 to 0.102 mm)	
Shims available	0.006, 0.010, 0.018 in. (0.15, 0.25, 0.46 mm)	
Shifter Rods Lengths		
Lower speed range shifter	15.71 to 15.91 in. (39.90 to 40.40 cm)	
Lower speed change shifter	16.75 to 16.95 in. (42.55 to 43.05 cm)	
Upper speed range shifter	20.51 to 20.71 in. (52.10 to 52.60 cm)	
Upper speed change shifter	21.28 to 21.49 in. (54.05 to 54.55 cm)	
Shifter Cam Shaft End Play	0.002 to 0.007 in. (0.051 to 0.178 mm)	
Shifter Camshaft O.D.	0.8738 to 0.8758 in. (2.2195 to 2.2245 cm)	
Shifter Shaft O.D.	0.998 to 1.002 in. (2.535 to 2.545 cm)	
Stabilizer Shaft O.D.	0.4978 to 0.4998 in. (1.2645 to 1.2695 cm)	
Reverse Shifter Stop Screw Clearance	1/2 turn in from contact with case wall	
Park Release Arm Clearance	0.90 in. (2.28 cm)	
Lock-Out Latch Clearance	0.10 in. (2.5 mm)	
Outer Support End Play	0.002 to 0.020 inch (0.05 to 0.50 mm)	

Item and Measurement	New Part Dimension	Wear Tolerance

Quad-Range Transmission (Continued)

Transmission Oil Pump
- O.D. of both gears ..... 2.082 to 2.084 in. (6.347 to 6.353 cm)
- Thickness of gears ..... 0.6225 to 0.6235 in. (2.052 to 2.055 cm)
- Pump body-to-gear clearance ..... 0.003 to 0.005 in. (0.08 to 0.13 mm)
- Pump cover-to-gear clearance ..... 0.0017 to 0.0043 in. (0.043 to 0.109 mm)
- Gear drive lug thickness ..... 0.2834 to 0.2934 in. (7.198 to 7.452 mm)
- I.D. of drive shaft bore in pump housing ..... 1.0035 to 1.0045 inch (25.49 to 25.51 mm)
- I.D. of idler gear bushing ..... 0.626 to 0.628 inch (15.90 to 15.95 mm)
- Transmission Oil Pump Relief Valve
  - O.D. of valve ..... 0.6645 to 0.6655 inch (16.88 to 16.90 mm)
  - Valve spring free length ..... 3.15 inch (80.0 mm)
  - Compressive load at 1.58 inch (40.1 mm) ... 19 to 23 lbs. (84.5 to 102.3 N)

Torque Values
- Countershaft bearing cap screws ..... 35 ft-lbs (47 Nm)
- Transmission drive shaft bearing quill cap screws ..... 35 ft-lbs (47 Nm)
- Differential drive shaft front lock nut ..... 400 ft-lbs (542 Nm)
- Transmission shifter arm support cap screws ..... 20 ft-lbs (27 Nm)
- Transmission case-to-torque divider cap screws ..... 300 ft-lbs (407 Nm)
- Rockshaft-housing-to-transmission case cap screws ..... 85 ft-lbs (115 Nm)
- Transmission case cover-to-case cap screws ..... 35 ft-lbs (47 Nm)
- Final drive housing-to-transmission case cap screws ..... 170 ft-lbs (230 Nm)
- Transmission oil pump-to-case cap screws ..... 20 ft-lbs (27 Nm)

Differentials And Drive Shafts

Rear Differential
- Differential bearing quill
  - I.D. for bearing ..... 5.3725 to 5.3745 in. (13.6462 to 13.6512 cm)
  - O.D. in housing ..... 6.874 to 6.876 in. (17.4595 to 17.4645 cm)
  - Preload ..... 0.002 to 0.005 in. (0.051 to 0.127 mm)
- Differential housing
  - Bearing cone surface ..... 3.3765 to 3.3781 in. (8.5763 to 8.5796 cm)
  - I.D. in housing bore ..... 3.1275 to 3.1335 in. (7.9439 to 7.9591 cm)
- Bevel pinion I.D. ..... 1.378 to 1.380 in. (3.500 to 3.505 cm)
- Thrust washer thickness ..... 0.102 to 0.104 in. (2.59 to 2.69 cm)
- Bevel gear O.D. ..... 3.1065 to 3.1075 in. (7.8905 to 7.8931 cm)
- Bevel pinion shaft O.D. ..... 1.3745 to 1.3755 in. (3.4912 to 3.4938 cm)
- Differential housing cover
  - O.D. at bearing cone surface ..... 3.3765 to 3.3781 in. (8.5763 to 8.5804 cm)
  - I.D. at bevel gear ..... 3.1275 to 3.1335 in. (7.9439 to 7.9591 cm)
- Shims available ..... 0.003, 0.005, 0.010 in. (0.076, 0.127, 0.254 mm)
- Differential Lock
  - Piston Return Spring
    - Free Length ..... 0.81 in. (21 mm)
    - Working Load ..... 0.53 in. at 45-55 lbs. (13.5 mm at 21-25 N)

Item and Measurement	New Part Dimension	Wear Tolerance

Differentials And Drive Shafts (Continued)

Drive Disk thickness	0.112-0.118 in. (2.8-3.0 mm)
Minimum Thickness	0.100 in. (2.5 mm)
Separator Plate Thickness	0.115-0.125 in. (2.9-3.2 mm)
Pressure Control Valve Spring	
Free Length	2.56 in. (65 mm)
Working Load at 1.31 in. (33.3 mm)	9.5-11.5 lbs. (42-52 N)
Plunger Spring Free Length	2.28 in. (58 mm)
Working Load at 1.92 in. (48.8 mm)	10.3-12.5 lbs. (46-56 N)
Pressure Control Valve O.D.	0.4978-0.4984 in. (12.64-12.66 mm)
Plunger O.D.	0.555-0.559 in. (14.1-14.2 mm)
Front Drive Shaft	
Bearing retainer	
O.D. at front sealing surface	4.003 to 4.005 in. (10.168 to 10.173 cm)
I.D. at front seal	3.349 to 3.351 in. (8.506 to 8.512 cm)
I.D. at rear seal	3.751 to 3.753 in. (9.528 to 9.533 cm)
O.D. at center	4.7617 to 4.7627 in. (12.0947 to 12.0973 cm)
O.D. at rear	4.866 to 4.868 in. (12.360 to 12.365 cm)
Bearing (self-aligning)	
Thickness	0.9005 to 0.9055 in. (2.2873 to 2.2300 cm)
O.D.	3.3459 to 3.3465 in. (8.4986 to 8.5001 cm)
I.D.	1.7712 to 1.7717 in. (4.4988 to 4.5001 cm)
O.D. of front seal	3.353 to 3.357 in. (8.522 to 8.527 cm)
O.D. of rear seal	3.754 to 3.758 in. (9.535 to 9.545 cm)
Front axle drive shaft	
O.D. at coupler O-ring	2.2357 to 2.2363 in. (5.6786 to 5.6802 cm)
O.D. at bearing	1.9372 to 1.9392 in. (4.9205 to 4.9255 cm)
O.D. at rear seal	1.7706 to 1.7712 in. (4.4973 to 4.4989 cm)
Front Differential	
I.D. of bushing in support	5.1290 to 5.1305 in. (13.0277 to 13.0315 cm)
I.D. of bushing in front of case	5.1290 to 5.1305 in. (13.0277 to 13.0315 cm)
Thickness of support thrust washer	0.120 to 0.130 in. (3.05 to 3.30 cm)
Differential drive shaft bearing quill	
O.D. at front surface	6.5004 to 6.5007 in. (16.5109 to 16.5117 cm)
I.D. of front bearing cup bore	5.3736 to 5.3738 in. (13.6490 to 13.6494 cm)
O.D. at support surface	5.1242 to 5.1262 in. (13.0155 to 13.0205 cm)
I.D. at rear bearing cup	4.1236 to 4.1252 in. (10.474 to 10.478 cm)
I.D. at rear oil seal	4.2474 to 4.2505 in. (10.7885 to 10.7963 cm)
Differential drive shaft	
O.D. at front bearing	2.8140 to 2.8150 in. (7.1476 to 7.1501 cm)
O.D. at rear bearing	2.1260 to 2.1266 in. (5.4000 to 5.4016 cm)
End play on shaft	0.001 to 0.004 in. (0.051 to 0.102 mm)
O.D. of oil seal at pivot pin	6.254 to 6.259 in. (15.885 to 15.898 cm)
Thrust washer behind pivot pin	0.036 in. (0.91 mm)
Special thrust washer thickness	0.245 to 0.255 in. (6.22 to 6.38 mm)
Pivot pin O.D. at bushing	5.1242 to 5.1262 in. (13.0155 to 13.0205 cm)
Pivot pin end play	0.002 to 0.008 in. (0.05 to 0.20 mm)

Item and Measurement	New Part Dimension	Wear Tolerance

Differentials And Drive Shafts—Continued

Torque Values

Differential drive shaft lock nut (front)	445 ft-lbs (603 Nm) maximum (initial) 200 to 350 ft-lbs (271 to 475 Nm) final
Front differential drive shaft bearing quill cap screws	85 ft-lbs (115 Nm)
Differential ring gear-to-differential housing cap screws	170 ft-lbs (230 Nm)
Differential housing cover-to-housing cap screws	
With lock	55 ft-lbs (75 Nm)
Without lock	85 ft-lbs (115 Nm)
Differential bearing quill cap screws	85 ft-lbs (115 Nm)
Final drive housing-to-differential case cap screws	240 ft-lbs (325 Nm)
U-Joint attaching cap screws	
8430	70 ft-lbs (95 Nm)
8630	85 ft-lbs (115 Nm)

Final Drives

Axle O.D. at Inner Cone	
8430 Front (all)	3.3765-3.3775 in.
8630 Front (-7842)	(85.763-85.789 mm)
8430 Rear (all)	3.3265-3,3275 in.
8630 Front (7843-)	(92.113-92.139 mm)
8630 Rear (4325-7842)	
8630 Rear (7843-)	3.8720-3.8783 in. (98.35-98.51 mm)
Axle O.D. at Outer Cone	
8430 Front (all)	3.6295-3.6305 in.
8430 Rear (all)	(92.189-92.215 mm)
8630 Front (-4324)	
8630 Rear (-4324)	
8630 Front (4325-)	3.9417-3.9761 in. (100.119-100.993 mm)
8630 Rear (4325-)	3.9407-3.9417 in. (100.093-100.119 mm)
Bearing Spacer I.D.	
8430 Front (all)	3.6220-3.6260 in.
8430 Rear (all)	(92.00-92.10 mm)
8630 Front (-4324)	
8630 Rear (-4324)	
8630 Front (4325-)	3.9331-3.9370 in.
8630 Rear (4325-)	(99.90-100.00 mm)

Final Drives—Continued

Item and Measurement	New Part Dimension	Wear Tolerance
Outer Cone I.D.		
8430 Front (all)*	3.6250-3.6260 in.	
8430 Rear (all)*	(92.075-92.100 mm)	
8630 Front (-4324)*		
8630 Rear (-4324)*		
8630 Front (4325-)	3.9362-3.9370 in.	
8630 Rear (4325-)	(99.98-100.00 mm)	
Outer Cup O.D.		
8430 Front (all)	6 in. (152.4 mm)	
8430 Rear (all)		
8630 Front (-4324)		
8630 Rear (-4324)		
8630 Front (4325-)	6.1014-6.1024 in.	
8630 Rear (4325-)	(154.975-155.000 mm)	
Inner Cone I.D.		
8430 Front (all)	3.3750 in.	
8630 Front (-7842)	(85.728 mm)	
8430 Rear (all)*	3.6250-3.6260 in.	
8630 Front (7843-)	(92.075-92.100 mm)	
8630 Rear (-4324)*		
8630 Rear (4325-7842)		
8630 Rear (7843-)	3.7500-3.7510 in.	
	(95.250-95.275 mm)	
Inner Cup O.D.		
8430 Front (all)	5.3750-5.3760 in.	
8630 Front (-7842)	(136.52-136.545 mm)	
8430 Rear (all)	6 in. (154.2 mm)	
8630 Front (7843-)		
8630 Rear (all)		

NOTE: Items marked with an asterisk (*) may have a modified axle. These parts require an undersize bearing cone.

**Undersize Cone I.D.*	*3.5965-3.5974 in. (91.350-91.375 mm)*

Final Drives—Continued

Item and Measurement	New Part Dimension	Wear Tolerance
Planet Pinion I.D.		
8430 Front (all)	2.7100-2.7114 in.	
8630 Front (all)	(68.834-68.860 mm)	
8430 Rear (all)	3.5972-3.5986 in.	
8630 Rear (-7842)	(91.369-91.405 mm)	
8630 Rear (7843-)	3.7012-3.7026 in.	
Bearing Roller O.D.		
8430 Rear (all)	0.2498-0.2500 in.	
8630 Rear (-7842) (126 used)	(6.345-6.350 mm)	
8430 Front (all)	0.3123-0.3125 in.	
8630 Front (-7842)	(7.932-7.938 mm)	
8630 Front (-7842)	0.3119-0.3123 in.	
8630 Rear (7843-) (102 used)	(7.921-7.931 mm)	
Thickness of Bronze Thrust Washer	0.008-0.012 in. (0.203-0.305 mm)	

Torque Values

Planetary Carrier-to-axle Screw	580 ft-lbs (786 Nm)
Final Drive Housing-to-Case Screws	
Front (with washers)	240 ft-lbs (325 Nm)
Rear	170 ft-lbs (230 Nm)

USING JDT-29 WRENCH

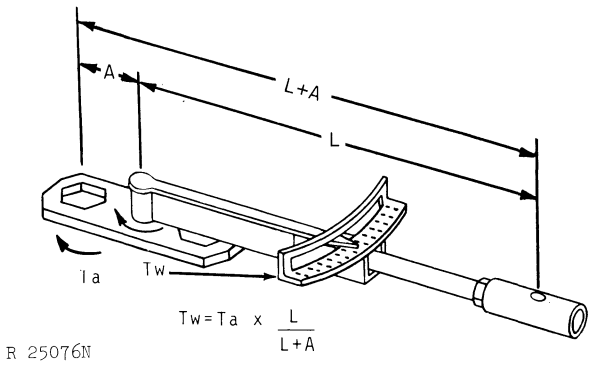

Fig. 1-Determining Torque Reading

When using the JDT-29 Wrench, the torque setting must be adjusted. Use the formula in Fig. 1 to determine the proper torque reading. The following chart identifies symbols.

Ta = Torque actually being applied to the nut.
Tw = Torque read on the torque wrench.
A = Application distance from center of torque wrench to center of wrench opening which is 3.5 in. (8.9 mm).
L = Length from the point of force (center of the handle) to the center of head of torque wrench.
L+A = Total effective length of assembly through which force is applied.

Multiply the length of the torque (L) wrench by the specified torque (Ta). Divide that number (Ta x L) by the length of the torque wrench (L) plus 3.5 in. (8.9 mm).

Be sure the torque wrench is kept parallel with the lock nut wrench as shown in Fig. 1.

SPECIAL TOOLS

No.	Name	Use
D-15027NU*	Pressure Test Kit	Used to measure hydraulic oil pressures for tests and adjustments.
D-01019AA*	Hand Pump	Used to test pressure switches. Used with ohmmeter.
D-01045AA*	Driver Set	Used to remove and install bearing cups, bushings and seals.
JDE-78-13*	Clutch Adjusting Tool	Used to adjust proper height of Perma-Clutch operating levers.
JDE-78-4*	Clutch Adjusting Ring	Used on 8630 with JDE-78-13 to adjust proper height of Perma-Clutch operating levers.
JDE-106*	Installer	Used to install front differential pivot pin seal.
JDT-3*	Snap Ring Expander Plate	Used to hold differential drive shaft snap rings open until installed on shaft.
JDT-10*	Snap Ring Expander Cone	Used to expand snap rings on differential drive shaft until expander plate is installed.
JDT-23*	Piston Installation Rings	Used to install overdrive brake piston in brake housing.
JDT-24*	Spring Compressor Tool	Used to compress spring washers in clutch drum (Quad-Range Planetary and Independent PTO) to remove or install snap ring.
JDT-26*	Differential Drive Shaft Installation Tool	Used to load gears and collars for installation on differential drive shaft.
JDT-27*	Yoke Holding Tool	Used to hold U-joint yokes until the castellated nut is torqued properly.
JDT-28*	Bushing Installer	Used to install large bushing in front differential support and in differential case for pivot pin.
JDT-29* (See note on preceding page)	Locknut Wrench	Used to torque large nut on front and rear differential drive shafts and clutch output yoke.
JDT-30*	Bearing Cup Remover	Used to remove transmission drive shaft rear bearing cup from case wall.
JDT-31*	Shifter Blocker Loader	Used to load and retain shifter springs and balls in blocker for installation on transmission drive shaft.
JDT-32*	Disk	Used with OTC Universal Driver Set to install inner seal in rear final drive housing.
JDT-42*	Spring Scale	Used to measure the proper specification for the proper differential drive shaft rolling drag torque.
JDST-36* (D-0502957)	Bearing Heater	Convenience tool for heating bearings to proper temperature for installation on shafts.
JDST-38*	Torque Multiplier	Convenience tool used to assist in achieving high torque values when used in conjunction with a low value torque wrench.
6359, 2027, 2106 and 0723*	Tee, Gauge Hose and Fitting	Used to measure differential lock oil pressure.

**Order from: Service Tools Inc., Box 314, Owatonna Tool Co., Owatonna, Minnesota 55060*

OTHER TOOLS AND MATERIALS REQUIRED

ITEM/TOOL	USE
Dial Indicator	Used to measure and adjust various end play and preload specifications throughout the tractor.
Large C-Clamp	Used to hold front differential drive shaft gear forward in transmission case when removing shaft.
1/4 in. Allen Wrench Socket Adapter (or 1/4 in. x 5 in. [125 mm]) Hex Bar	Used to remove and install planetary brake housing attaching screws.
T43511 Primer (Loctite "T") and AT35125 Adhesive (Loctite "RC 35" Adhesive)	Used to retain synchronizer/blocker assembly.
T43514 Liquid Plastic Gasket (Loctite 277 Adhesive Sealant)	Used to seal between input housing and transmission case and rear hinge.
Modified R58057 or R63067 Bearing Cover (Cut 2-1/2 in. [63.5 mm] dia. hole in center)	Used to check end play of shafts located in input housing.
0.3-0.4 in. (7.6-10.2 mm) dia. lead balls	Used to determine shim pack required to set axle bearing rolling drag torque.
Planetary/Operating Housing Installation and Removal Tool*	Used with an "A-frame" chain hoist to remove and install two-speed planetary and operating piston housing.
Differential Drive Shaft Front End Holding Tool*	Used to hold differential drive shaft while torquing nut.
Differential Drive Shaft Pinion End Holding Tool*	Used to hold differential drive shaft forward in case while installing front bearing.
Axle Support Tool*	Used to support axle housing during repair and adjustment. Use with a large U-bolt.
Axle Jacking Tool*	Used to press axle shaft from final drive housing and to obtain bearing end play during adjustment.
Axle Planetary Removal Hook*	Used to remove and install final drive planetary. Use with a chain hoist.
Axle Housing Adapter*	Used with a bending bar torque wrench to check rolling drag torque when wheels are installed on the axle.

**See illustration and instructions under "Making Tools".*

Litho in U.S.A.

MAKING TOOLS

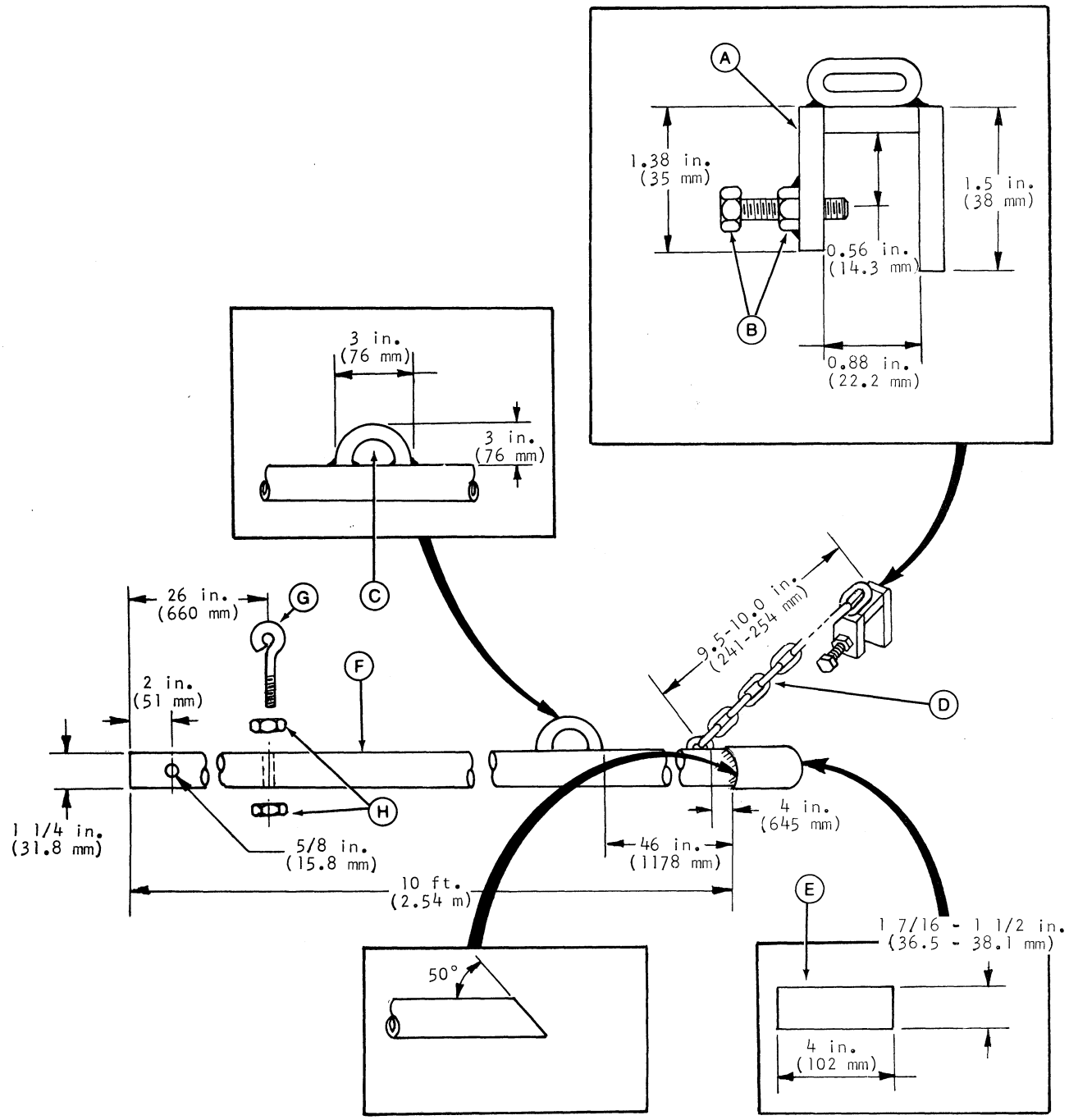

R31803

A—1/4 x 5/8 in. Strap
B—5/16 x 1-1/2 in. Screw and Nut
C—5/8 in. Dia. Rod
D—1/4 in. Chain
E—1-7/16 to 1-1/2 in. O.D. Shaft or Pipe
F—1-1/4 in. Pipe
G—3/8 x 6 in. Eyebolt
H—3/8 in. Nut

Fig. 2-Planetary/Operating Housing Removal and Installation Tool

Litho in U.S.A.

MAKING TOOLS—Continued

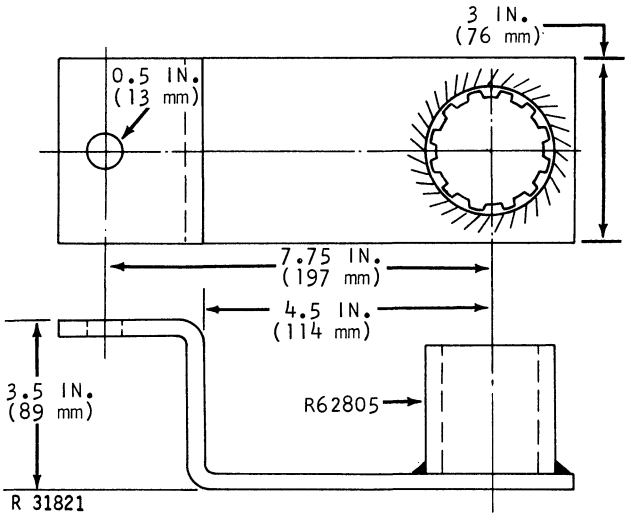

Fig. 3-Drive Shaft Front End Holding Tool

1. Weld a R62805 Coupling to a 7 in. (178 mm) length of 1/4 x 3 in. (6.5 x 76 mm) flat bar stock.

2. Cut a 1 in. (25 mm) diameter section from one end of stock and bend as shown in Fig. 3 to obtain correct configuration.

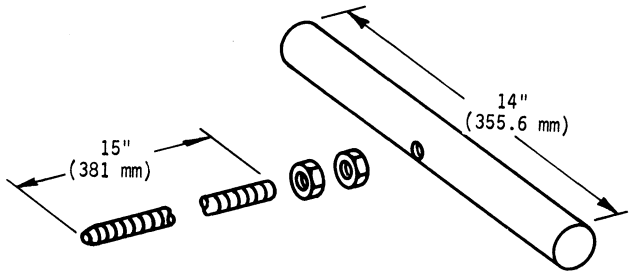

Fig. 4-Drive Shaft Pinion End Holding Tool

1. Drill a 17/32 in. diameter hole through the center of a 1 in. diameter steel shaft and tap the shaft hole with 5/8 in. threads.

2. Grind a taper on one end of the Ready Rod screw.

3. Assemble the parts and lock two 5/8 in. nuts together on the screw.

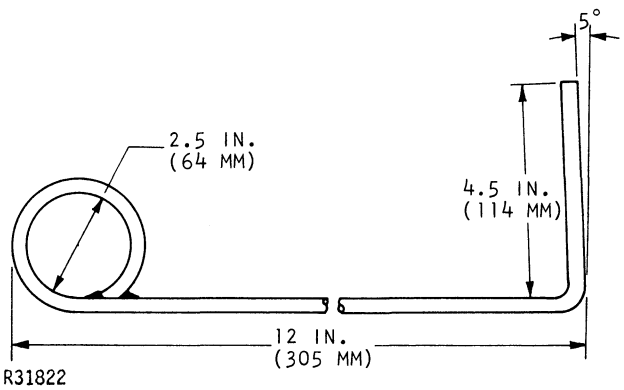

Fig. 5-Axle Planetary Removal Hook

1. Bend 1/2 in. diameter rod as shown.

2. Weld at O-joint.

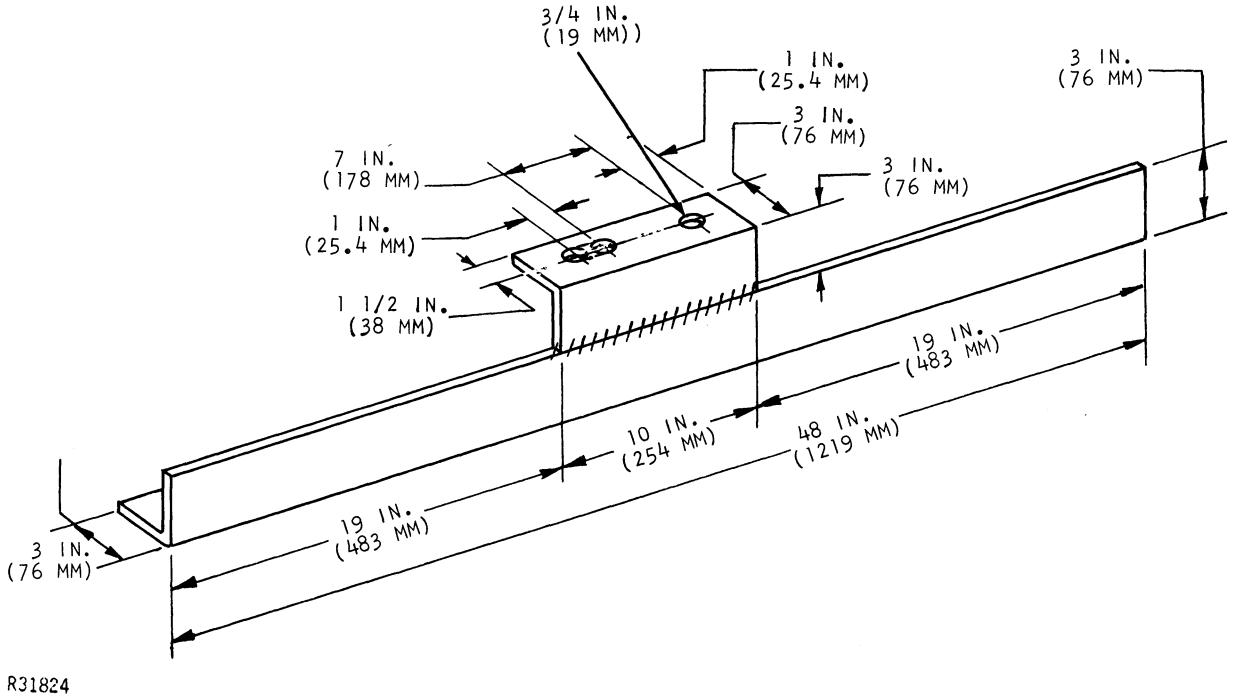

Fig. 6-Axle Support Tool

1. Slot one hole as shown.
2. Weld joints.

Material: 3 in. (76 mm) Angle Iron

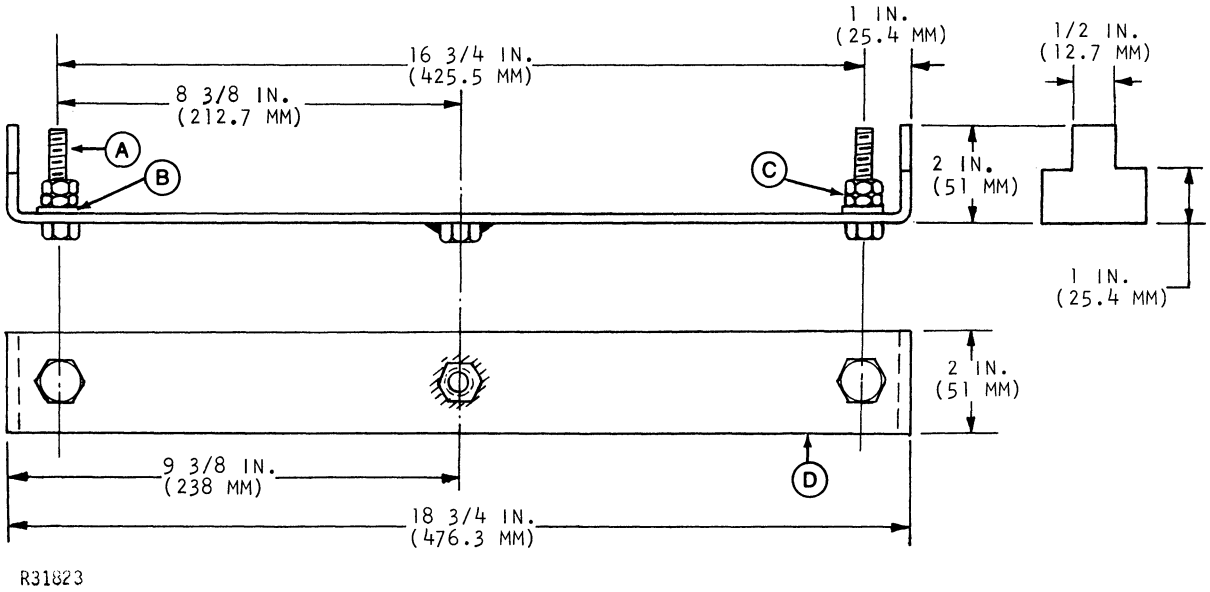

A—3/8 x 2 in. Cap Screws (2 used) **B—Flat Washer (2 used)** **C—3/8 in. Nut (5 used)** **D—1/4 x 1-1/2 in. Strap**

Fig. 7-Axle Housing Adapter

MAKING TOOLS—Continued

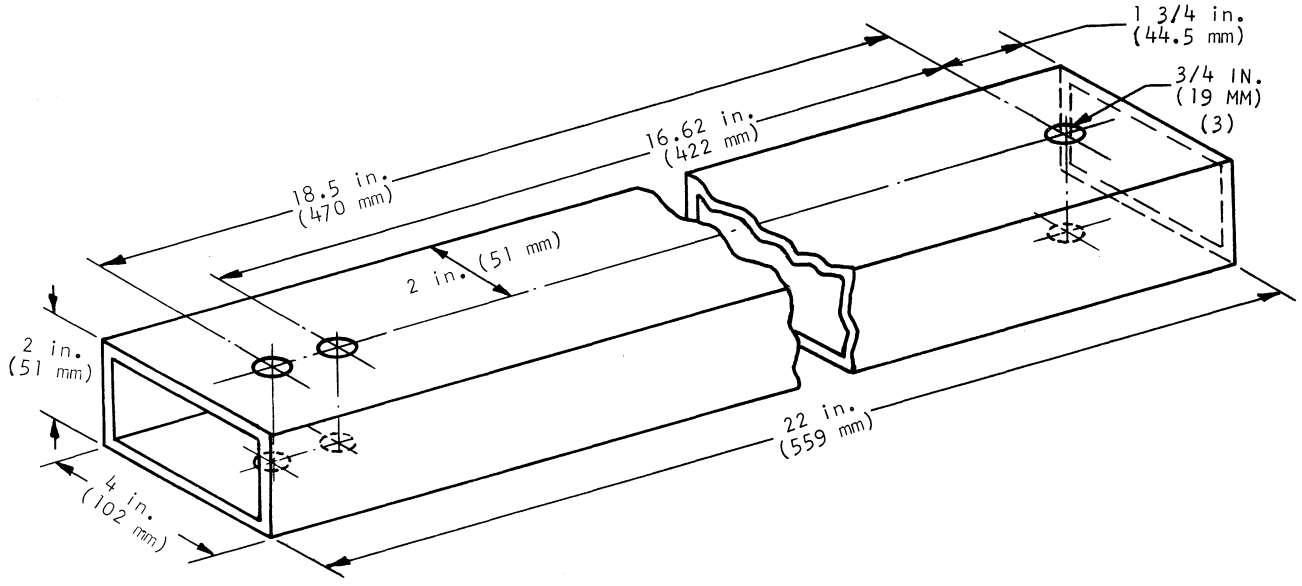

Fig. 8-Axle Jacking Tool

Material: 2 x 4 x 3/16 in. Tubing with two 9/16 x 14 in. Studs.

Section 60
STEERING AND BRAKES

Group 5
GENERAL INFORMATION

Refer to Section 70 "Hydraulic System" for general information, testing, diagnosis, repair, and adjustment for the power steering and brake systems.

Litho in U.S.A.

Litho in U.S.A.

Section 70
HYDRAULIC SYSTEM

CONTENTS OF THIS SECTION

Page

GROUP 5 - GENERAL INFORMATION
General Information 5-3

GROUP 6 - GENERAL HYDRAULIC SYSTEM DIAGNOSIS AND TESTS
General Information 6-1
Safety Precautions 6-1
Step-By-Step Diagnosis
Special Tools 6-2
How To Use Step Charts 6-4
Heating Hydraulic Oil 6-5
Preliminary Checks 6-6
Tractor Charts 6-8

GROUP 10 - MISCELLANEOUS HYDRAULIC COMPONENTS
Reservoir and Filter 10-1
Hydraulic Oil Relief and Check Valves 10-1
Pressure Control Valve 10-4
Oil Cooler 10-5

GROUP 15 - HYDRAULIC PUMPS
Clutch Oil and Oil Transfer Pump 15-1
Operation 15-2
Diagnosis and Test 15-3
Repair 15-3
Main Pump
Operation 15-6
Diagnosis and Test 15-7
Removal and Repair 15-8
Inspection 15-9
Adjustment 15-12

GROUP 20 - POWER STEERING
General Information 20-1
Operation 20-2
Diagnosing Malfunctions 20-6
Repair 20-7
Metering Pump 20-7
Steering Valve 20-10
Steering Cylinders 20-13

Page

GROUP 25 - POWER BRAKES
General Information and Operation 25-1
Diagnosing Malfunctions 25-2
Brake Cylinders, Plates and Disks 25-3
Brake Valve 25-3
Adjustment 25-6
Bleeding Brakes 25-7
Brake Accumulator 25-8
Pre-charging Accumulator 25-9
Accumulator Test 25-9

GROUP 30 - ROCKSHAFT AND IMPLEMENT HITCHES
General Information and Operation 30-1
Diagnosing Malfunctions 30-8
Rockshaft 30-14
Rockshaft Valve Housing 30-16
Console Levers 30-20
Load Sensing Cylinder 30-21
3-Point Hitch 30-23
Final Rockshaft Installation 30-25

GROUP 35 - SELECTIVE CONTROL VALVES, BREAKAWAY COUPLER AND REMOTE CYLINDER
General Information and Operation 35-1
Diagnosing and Testing 35-4
Removal and Disassembly 35-6
Inspection, Repair and Assembly 35-8
Adjustment 35-10
Breakaway Coupler 35-11
SCV Installation 35-12
Remote Cylinder 35-12

GROUP 40 - SPECIFICATIONS AND SPECIAL TOOLS
General Information 40-1
Hydraulic System Diagnosis and Tests 40-1
Reservoir, Valves and Oil Cooler 40-1
Hydraulic Pumps 40-2
Power Steering 40-3
Power Brakes 40-4
Rockshaft and Implement Hitches 40-4
Selective Control Valves 40-5
Special Tools 40-7

Litho in U.S.A.

1 - Main Hydraulic Pump
2 - Hydraulic Oil Cooler
3 - Steering Valve
4 - Steering Metering Pump
5 - Brake Valve
6 - Brake Accumulator
7 - Pressure Regulating Valve Housing
8 - L.H. Steering Cylinder
9 - Steering Feedback Cylinder
10 - R.H. Steering Cylinder
11 - Oil Transfer Pump
12 - Clutch Oil Pump
13 - Oil Filter Relief Valve Housing
14 - Return Oil Filter Relief Valve Housing
15 - Load Sensing Cylinder
16 - Rockshaft Assist Cylinder**
17 - "Double" Selective Control Valve
18 - "Triple" Selective Control Valve
19 - "Single" Selective Control Valve
20 - Rockshaft
21 - R.H. Brake Assembly
22 - L.H. Brake Assembly
23 - Hydraulic Attenuator
24 - To Clutch Operating Valves
25 - To Top of Clutch Housing
26 - To Top of Transmission Case
27 - Pressure Control Valve
28 - Directional Valve*
29 - Differential Lock Valve
30 - To Differential Lock

*8430 - (T1741-)
8630 - (T2453-)

**8630 Only

(A) PRESSURE OIL
(B) LOW PRESSURE OIL
(C) RETURN OR PRESSURE FREE OIL
(D) TRAPPED OIL

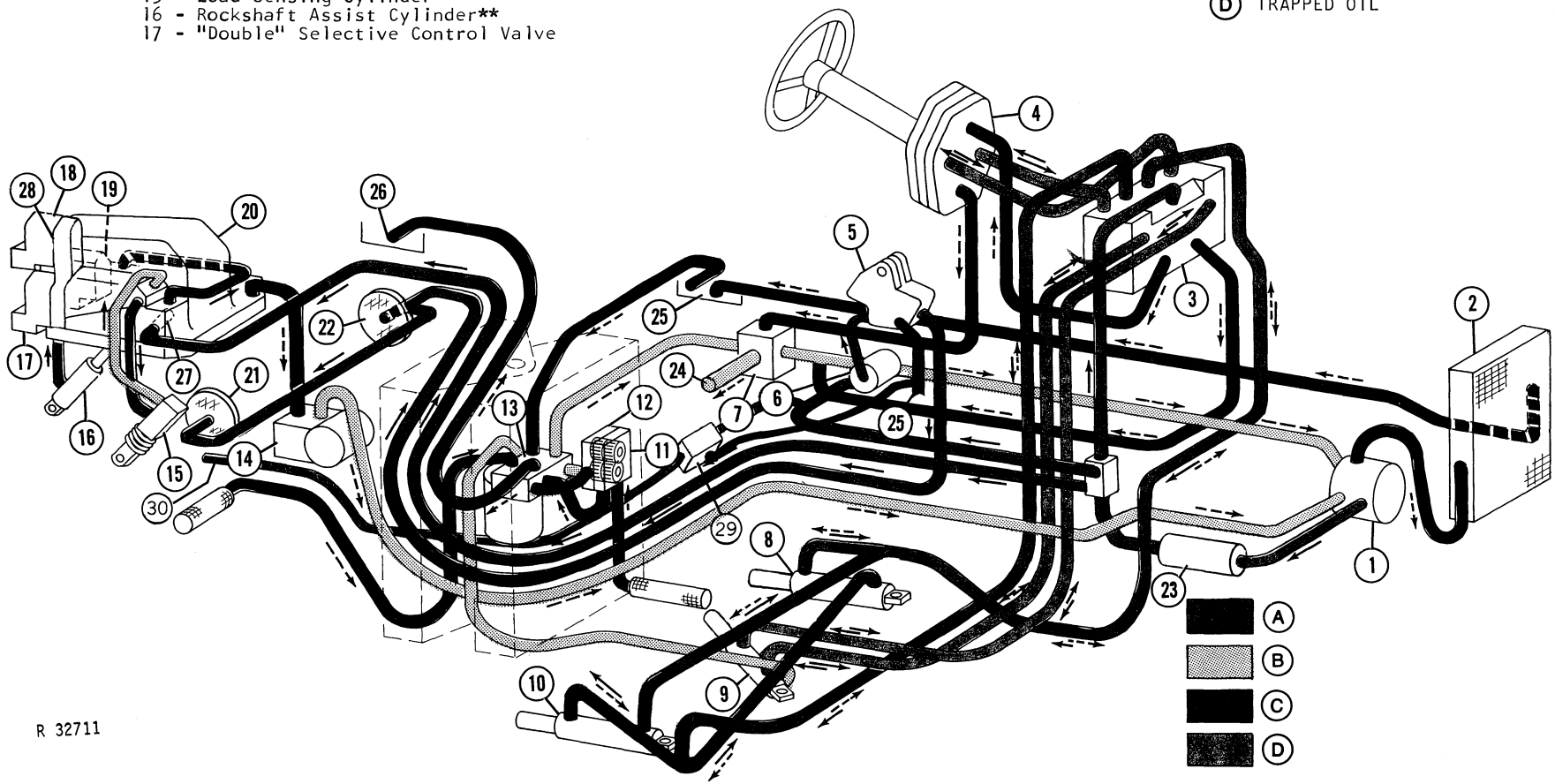

Fig. 1-Circuit Flow Diagram

Group 5
GENERAL INFORMATION

The hydraulic system is a closed-center, constant pressure system. It supplies pressure oil to operate steering, brakes, rockshaft and remote cylinders.

Oil for the main hydraulic pump and the pressure circuit is supplied by two charging circuits. One circuit routes all hydraulic function return oil directly to the main hydraulic pump. The other circuit contains a fixed-displacement charge pump (12, Fig. 1) that draws oil from the transmission case and directs it to clutch operating valves and the main hydraulic pump. The transmission case serves as the reservoir for the hydraulic system.

NOTE: Charge pump (12) draws oil from the torque divider housing on 8430 models (T1475-) and on 8630 models (T1956-).

Another fixed-displacement pump (11) in the clutch housing pumps return oil from the oil cooler, clutch operating valves, and clutch lubrication back to the transmission case to maintain reservoir oil level.

For more detailed information regarding hydraulic system components, see the remaining groups in this section. For further information regarding clutch and transmission operation and lubrication, see Section 50.

Litho in U.S.A.

Litho in U.S.A.

Group 6
GENERAL HYDRAULIC SYSTEM TESTS AND DIAGNOSIS

GENERAL INFORMATION

The following checks, diagnostic and test procedures are provided to isolate hydraulic system and, in some cases, power train hydraulic problems.

Starting with preliminary checks, each procedure is designed to isolate the problem to a general area, a particular hydraulic circuit or a specific hydraulic component.

Use the procedures when there is a "no hydraulics" complaint, hydraulic functions are slow, hydraulic oil is over-heated, or when major power train or hydraulic system repairs have been made. In all cases, follow the sequence and test specifications as given.

To insure test accuracy, it may be necessary to heat the hydraulic oil to a specified temperature. Use the procedure on page 6-5 to heat the oil AFTER making the Preliminary Checks on pages 6-6 and 7.

The charts that follow provide a step-by-step sequence to make preliminary checks and test and isolate hydraulic system and power train problems.

Charts on pages 6-6 and 7 are used to make a preliminary examination of the tractor. Often, a preliminary check will locate the problem. Make these checks before installing any test equipment. Pay particular attention to the "Cautions" on this page.

Charts on pages 6-8 through 6-23 cover detailed diagnosis and tests of the hydraulic system.

IMPORTANT: In the test procedures, 10 psi (69 kPa) lube pressure is used as a beginning reference for several tests:

If lube pressure is above 10 psi (69 kPa) at slow idle, adjust engine speed to get next higher gauge increment.

If lube pressure is below 10 psi (69 kPa) at wide open throttle, continue to test at wide open throttle.

CAUTION: The following safety precautions MUST be followed to prevent personal injury or damage to test equipment:

1. Securely tie open end of jumper hose in the oil filler tube from selective control valve when heating hydraulic oil or flow testing clutch oil pump.

2. Use the following steps when checking the transmission oil control circuits for leakage.

A. Place the transmission shift levers in "Neutral" and "Park"

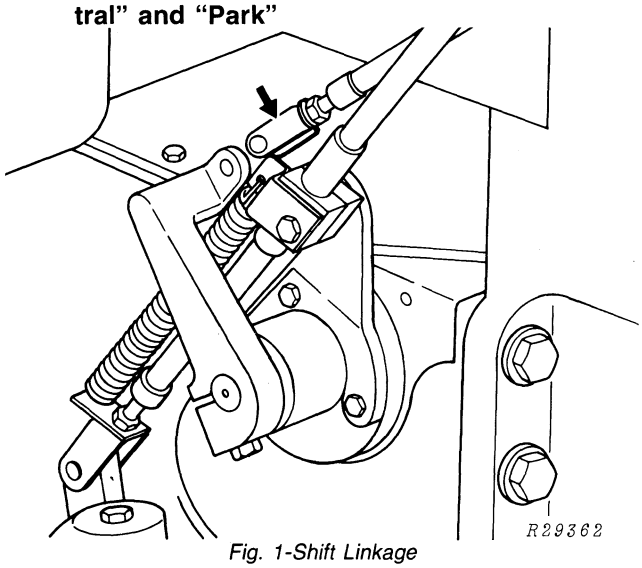

Fig. 1-Shift Linkage

B. Disconnect linkage yoke from transmission drive shaft shift arm (Fig. 1).

C. The transmission shift levers can be placed in "A" Range and first or second speed.

D. After testing or repair, shift to "Park" and reconnect shift linkage.

STEP-BY-STEP HYDRAULIC SYSTEMS DIAGNOSIS

Special Tools

The following special tools are required to perform step-by-step diagnosis of Quad-Range transmission equipped tractors.

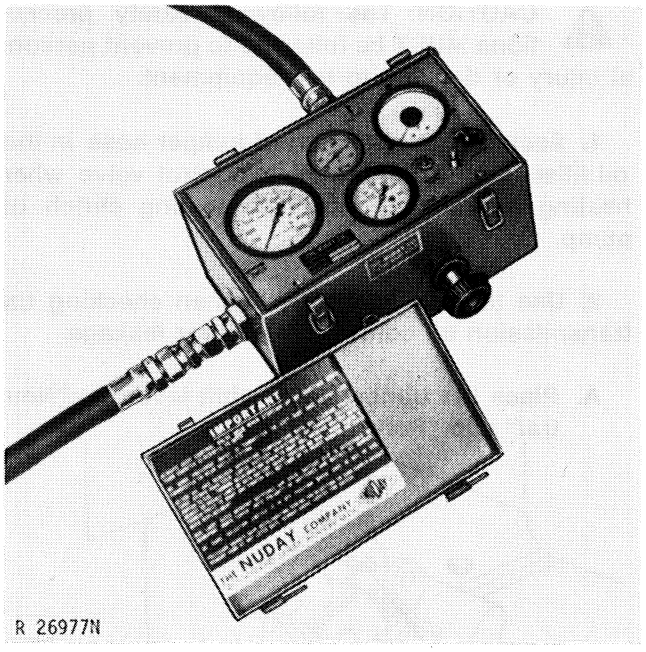

A—*D-15017N Hydraulic Flow Meter

Fig. 2-Hydraulic Flow Meter

*(NOTE: *D-1074AA Hydraulic Flow Meter may also be used)*

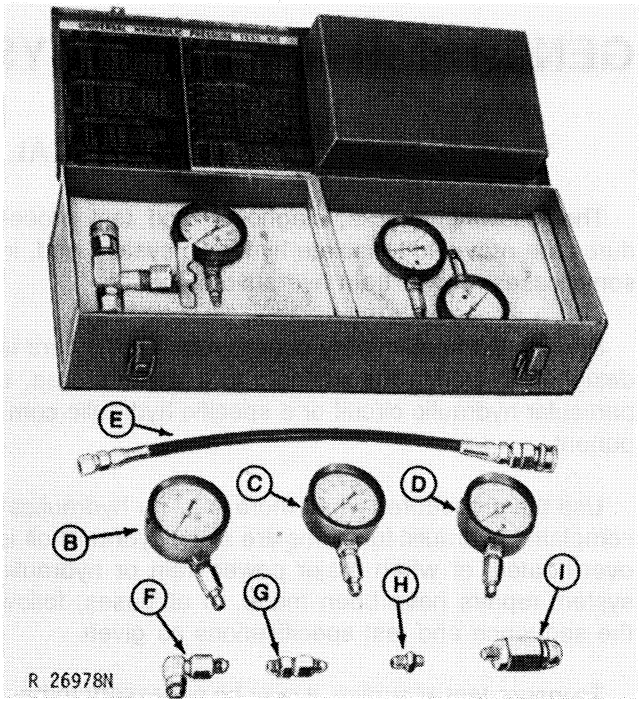

B—0-60 psi (0-5 Bar) Pressure Gauge
C—0-300 psi (0-25 Bar) Pressure Gauge
D—0-5000 psi (0-400 Bar) Pressure Gauge
E—D-19 Hose (3 used)
F—D-6 90° Elbow
G—D-12 Adapter
H—D-5 Adapter
I —D-8 Coupling

*Fig. 3-*D-15027NU Universal Pressure Test Kit*

*Order from Service Tools
Box 314
Owatonna, Mn. 55060

Litho in U.S.A.

Special Tools—Continued

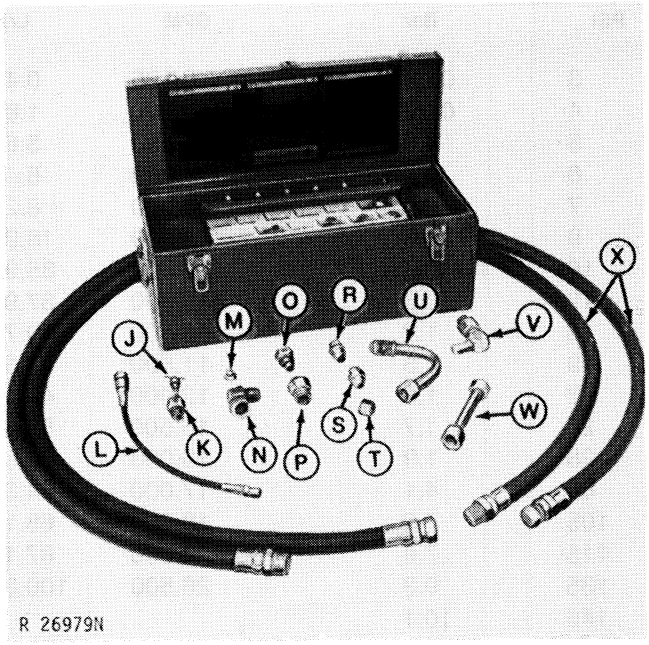

J —6739 Destroking Screw
K—0714 SCV Coupler Plug (2 used)
L —2106 Hose with Coupler Plug
M—6670 Plug
N—0017 90° Elbow-JIC
O—0760 Swivel Fitting
P —0761 O-Ring Fitting-Female (2 used)
R —0092 Union
S —6724 Reducer
T —1240 Cap
U —6568 55° Tube
V —2488 90° Elbow†*
W—6794 Tube
X —0094 R2- Flow Meter Hose (2 used)
6725 Coupling (Not shown)

Fig. 4-Master Hydraulic Fitting Flow Test Kit-
**D-15022NU*

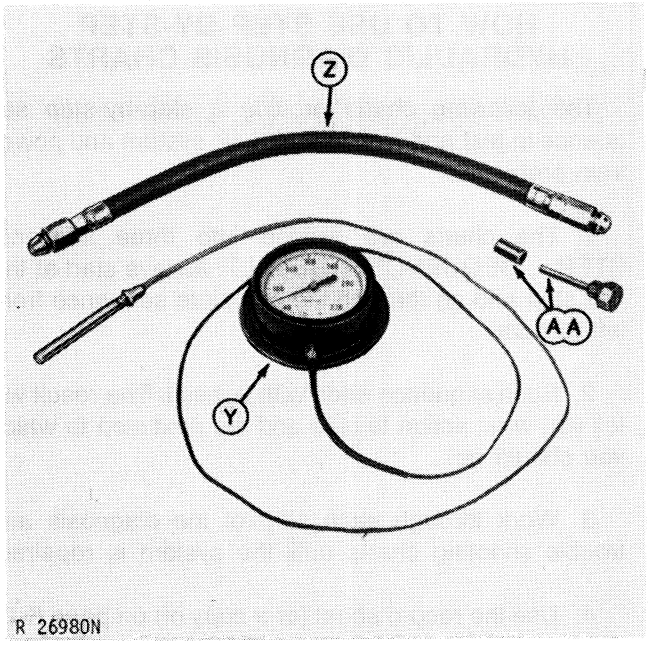

Y—100-240°F (38-120°C) Temperature Gauge (Automotive type)
Z —R-2 Hose-1/2" x 48 in. (Jumper Hose)
AA—JD-293-5 and 6*

Fig. 5-Miscellaneous Special Test Equipment

*Order from Service Tools, Box 314, Owatonna, Minnesota 55060

HOW TO USE STEP-BY-STEP HYDRAULIC DIAGNOSIS CHARTS

The following charts provide a step-by-step sequence to test and isolate hydraulic system and power train problems.

1. The charts are divided into three sections: STEP - SEQUENCE - RESULT. Always start at the first step and go through the complete sequence from left to right.

2. Each sequence ends with a result. The result will tell you what action to take and the next step to which you should go.

3. Work through each step of the diagnosis and trouble shooting charts until the system is repaired.

4. Use the record sheet (or a copy of) on page 6-25 to record test results. The circled numbers in the test sequence charts correspond to numbers on the record sheet.

ABBREVIATIONS USED IN CHARTS

PCV - Pressure Control Valve
SCV - Selective Control Valve
PTO - Power Take-Off
PSI - Pounds Per Square Inch
RPM - Revolutions Per Minute
LH - Left Hand
RH - Right Hand
SPEC - Specification
QT - Quart
GPM - Gallon Per Minute
WOT - Wide-Open Throttle
RS - Rockshaft

CAUTION: Escaping fluid under pressure can have sufficient force to penetrate the skin, causing serious personal injury. Before disconnecting lines be sure to relieve all pressure. Before applying pressure to system, be sure all connections are tight and that lines, pipes and hoses are not damaged. Fluid escaping from a very small hole can be almost invisible. Use a piece of cardboard or wood, rather than hands, to search for suspected leaks.

If injured by escaping fluid, see a doctor at once. Serious infection or reaction can develop if proper medical treatment is not administered immediately.

METRIC EQUIVALENTS TO CHART SPECIFICATIONS

PSI	Bar	GPM	L/M
3	0.20	0.125	0.42
4	0.27	0.500	1.8
5	0.3	1.000	3.6
6	0.4	1.500	5.4
7	0.5	2.000	8.2
9	0.6	5.000	18.9
10	0.7	9.500	35.9
12	0.8	10.000	37.9
18	1.2	10.500	39.7
19	1.3	11.500	43.5
22	1.5	12.000	45.4
25	1.7	15.500	58.6
28	1.9	16.000	60.5
60	4.1	17.000	64.3
105	7.2	18.000	68.1
115	7.9	23.000	87.1
135	9.3	26.500	100.3
145	10.1		
170	11.7	**Temperature**	
175	12.1	100°F	38°C
180	12.4	110°F	43°C
195	13.4	150°F	65.5°C
300	20.7	240°F	120°C
500	34.5		
1500	103.4	**Dimensions**	
1600	110.3	3/16 in.	4.762 mm
1700	117.2	3/8 in.	9.525 mm
2000	137.9	10 in.	254 mm
2200	151.7		
2250	155.1		
2300	158.6		
5000	344.7		

CAUTION: Keep hands away from moving parts. Shut engine off before checking lines near moving parts.

CAUTION: Before disconnecting lines, relieve all pressure. Before pressurizing system, be sure that all connections are tight.

Litho in U.S.A.

HEATING THE HYDRAULIC OIL

Use this procedure after completing Preliminary Checks (Step 1).

A temperature gauge (I, page 8), jumper hoses (K) and lube gauge (E) are used when heating oil.

Observe "CAUTIONS" on Page 6-4

At 1700 engine rpm

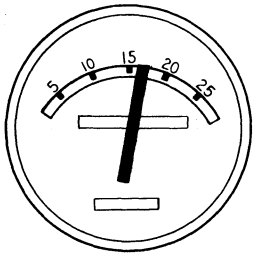

Move SCV lever to flow oil to sump.

Tie hose

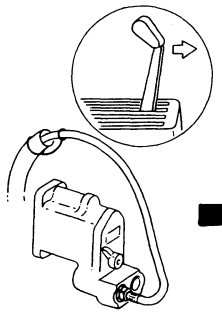

Adjust SCV metering lever to get 4 to 6 PSI lube pressure

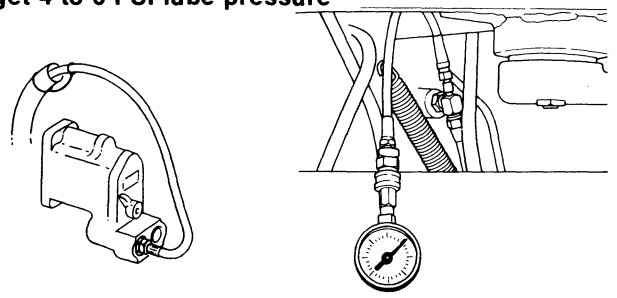

Move right hand lever to circulate oil with metering lever at 12 o'clock position.

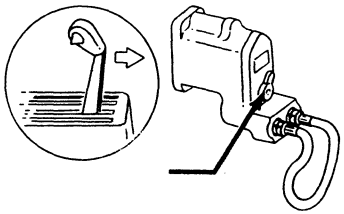

Observe temperature gauge. Move SCV lever(s) to neutral when desired temperature is reached.

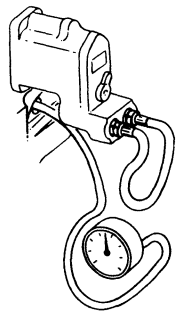

Covering the oil cooler in front of the radiator will help to heat oil to 150°F.

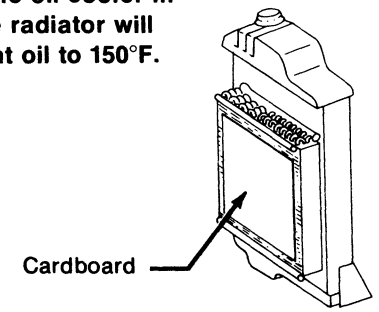

DRAINING OIL COOLER

Use this procedure before installing or removing test equipment at the main pump. This will prevent oil spillage and burns from hot oil.

At 800 engine rpm

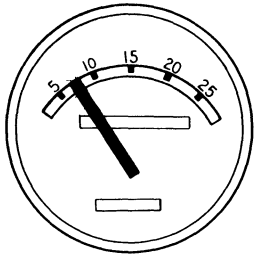

Move SCV lever to flow oil to sump.

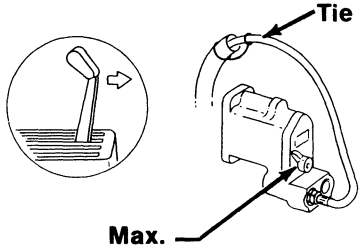

When hose starts to jump (pump cavitation) shut off engine before moving SCV lever to neutral.

1 **MAKE THE FOLLOWING PRELIMINARY CHECKS AND CORRECT PROBLEMS AS REQUIRED BEFORE INSTALLING TEST EQUIPMENT**

(A) Ask The Operator

- How is machine performing
- When does it malfunction
- In what applications

(B) Check Maintenance Records For:

- Proper service
- Unusual, frequent or similar failures

(C) Check For:

- Broken drives
- Broken or binding operating linkage
- Other mechanical failures

(D) Check Hydraulic Oil Condition

– Oil level low

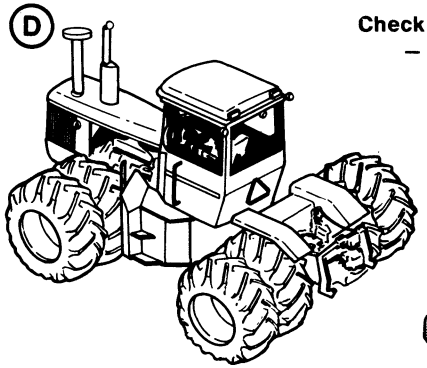

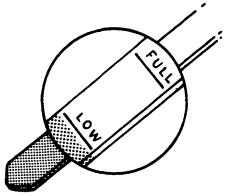

Possible Causes

- Improper service
- External leaks

– Oil Milky or Dirty

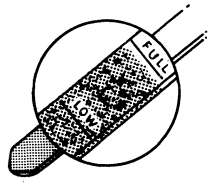

Possible Causes

- Water in oil (milky)
- Filter failure
- Metal particles (mechanical failure)

– Oil discolored or has burned Odor (overheated oil)

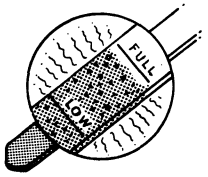

Possible Causes

- Kinked pipes
- Plugged oil cooler
- Wrong oil viscosity
- Internal leaks

– Plugged or dirty Oil Filters

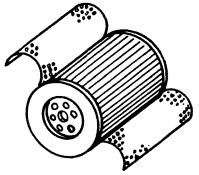

Possible Causes

- Improper Service
- Mechanical Failure
- System Failure

R29340

(E) Check For External Leaks (Engine Stopped or Running)

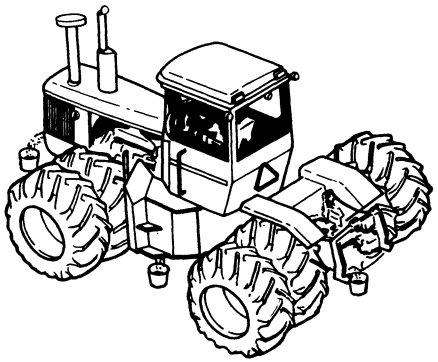

Possible Causes
- Broken or loose pipes
- Leaking O-rings and seals
- Cracked housings

SEE CAUTION ON PAGE 6-4

(F) Check For Hot Oil Lines and Passages

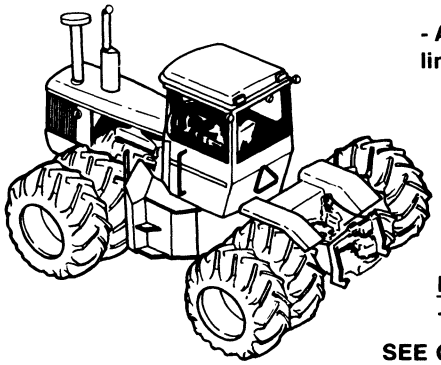

- At slow idle, feel return lines and passages.

Possible Cause
- Internal leakage

SEE CAUTION ON PAGE 6-4

(G) Check For Unusual Noises in System: (further evidence of internal leaks)

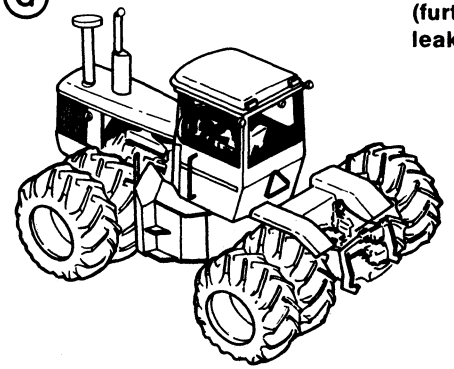

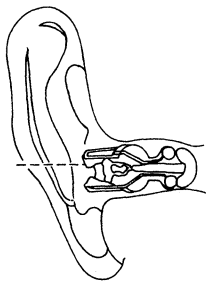

Listen for unusual noises in oil lines, passages and control valves as you . . .

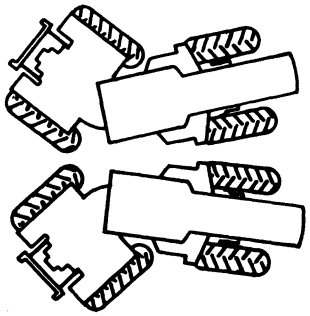

Turn full right and full left . . .

Apply differential lock and brakes . . .

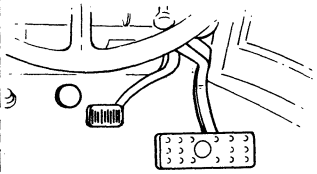

Move SCV levers (without cylinders) forward and rearward. Move RS lever (without load) rearward.

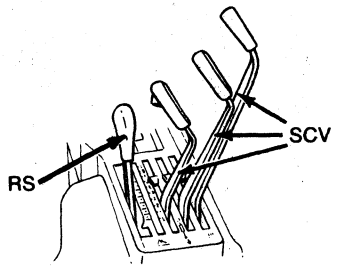

(H) Operate Tractor. Use hydraulic and power train functions.

RS and SCV Time-Cycle Tests
- **RS lift cycle time (76° rotation) 2.5 to 3.0 sec. at 2000 rpm**
- **SCV extend 3.5 x 8 in. remote cylinder 1.5 to 2.0 sec. at 2000 rpm**

Be alert for conditions that could isolate problems or cause further damage.

(I) Check manual bypass valve (if equipped) and close, if open.

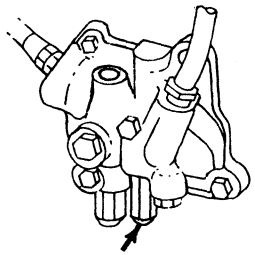

(J) Check filter relief valve

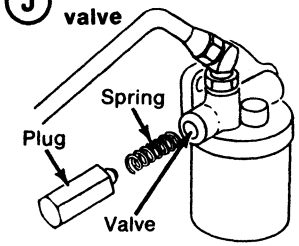

With engine off, remove the filter relief valve plug and spring. Remove valve using JDH-53 special tool. Check valve for free movement in bore.

RESULT

IF PRELIMINARY CHECKS ISOLATE PROBLEM – REPAIR

IF PRELIMINARY CHECKS FAIL TO ISOLATE PROBLEM . . .

GO TO STEP 2

R32716

Litho in U.S.A.

STEP	SEQUENCE	RESULT
2	**Install Test Equipment As Shown:** 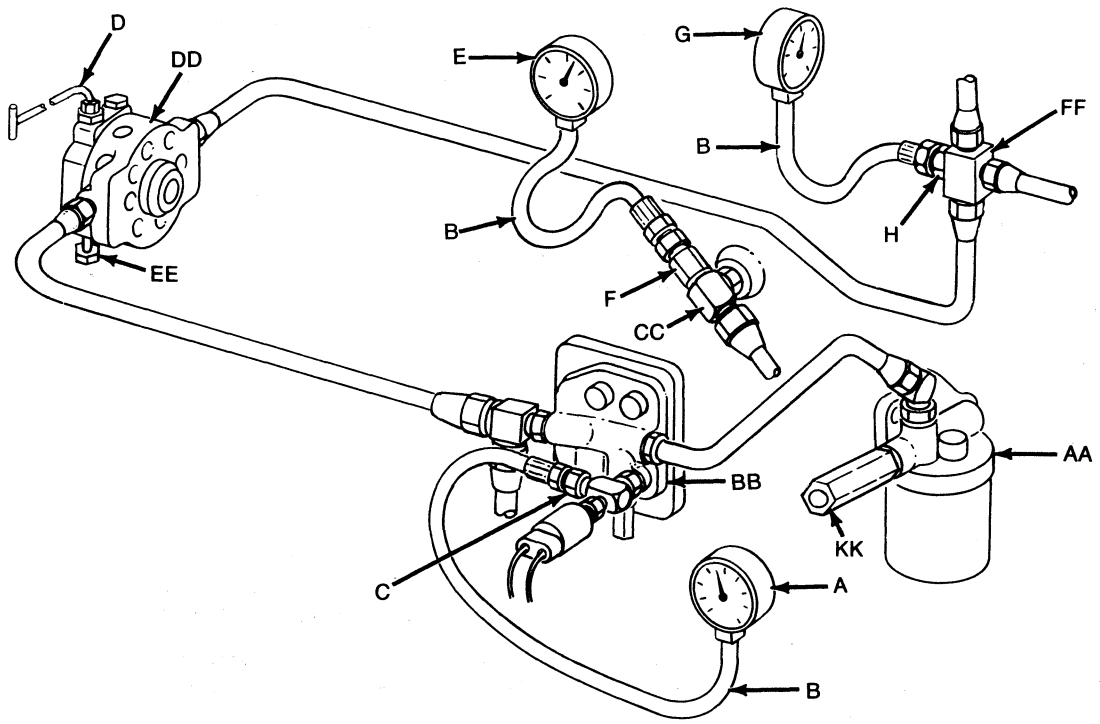 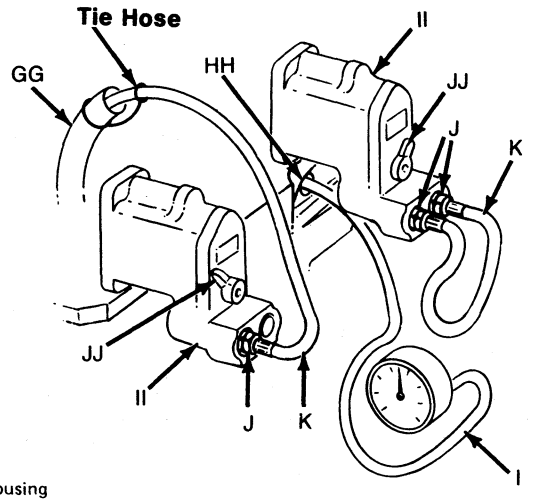	**Heat oil to 110°F.** **See page 6-5** → **GO TO STEP 3**

(A) 0-300 PSI Gauge - Clutch Pressure
(B) D-19 Test Hose (2106)
(C) D-16 Adaptor (0723)
(D) Destroking Screw Assembly (JDH-51) (2487)
(E) 0-60 PSI Gauge - Lube Pressure
(F) D-15 Adaptor (0722)
(G) 0-5000 PSI Gauge - High Pressure
(H) D-12 Adaptor (0721)
(I) 100-240°F - Temperature Gauge
(J) SCV Coupler Plug
(K) SAE 100R2 Hose (1/2 x 48 in.)
(AA) Oil Filter Relief Valve Housing
(BB) Pressure Regulating Valve Housing
(CC) Lube Test Port (LH Side of Tractor)
(DD) Main Hydraulic Pump
(EE) Stroke Control Valve Adjusting Screw
(FF) Junction Block
(GG) Transmission Oil Filler Tube
(HH) Plug at Rear of Transmission Case
(II) Selective Control Valve
(JJ) SCV Metering Lever
(KK) Filter Relief Valve Plug

Litho in U.S.A.

Litho in U.S.A.

STEP	SEQUENCE			RESULT
3 HIGH PRESSURE LEAK TO SUMP or HIGH PRESSURE LEAK TO RETURN TEST: All Control Valves in Neutral.	Adjust engine speed to get 10 PSI lube pressure. 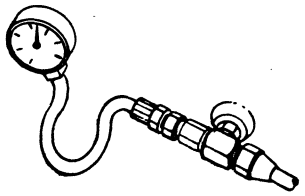 NOTE: Less than 5 PSI at WOT, continue testing.	Turn in to destroke main pump. Listen for decrease in engine load. 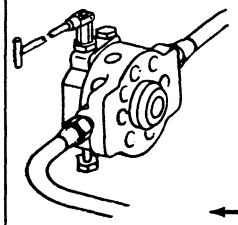 ← Back out destroking screw	If engine load decreases re-adjust to previous rpm. Record lube pressure 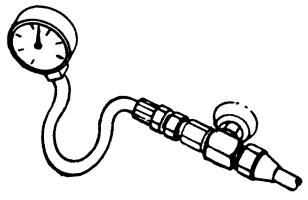	0-3 PSI Increase and Same Load → Normal Leakage GO TO STEP 17 More than 3 PSI Increase → Leak to Sump GO TO STEP 4 0-3 PSI Increase But Load Decreases → Leak to Return GO TO STEP 11 Less than 5 PSI: At WOT → Leak in Charge Circuit GO TO STEP 19
4 (Tractors less rockshaft – go to Step 10) Cap pressure fitiing from RS valve housing to load sensing cylinder. 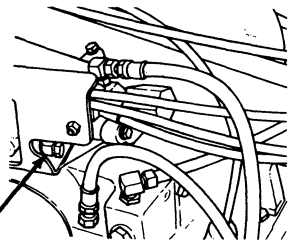 6674 Cap	Adjust engine speed to get 10 PSI lube pressure. 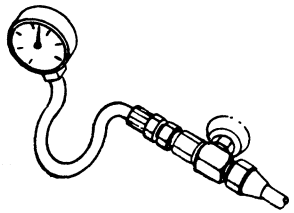	Turn in to destroke main pump. 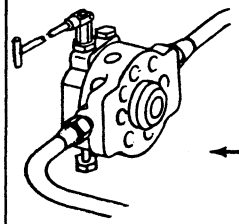 ← Back out destroking screw NOTE: Reconnect hose to pressure fitting after test or repair.	Check lube pressure 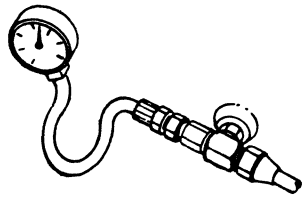	More than 3 PSI Increase → GO TO STEP 8 0-3 PSI Increase → GO TO STEP 5
5 You have excessive leakage to sump from: 1. RS load control filter-orifice deteriorated. 2. RS load sensing cylinder stuck open. 3. Sensing cylinder packing leaking, if equipped with vent to sump kit.	To isolate (with no load on hitch): Connect hose. Place RS load selector lever at "MAX". 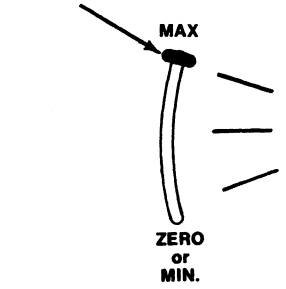 	Start engine. Place RS control lever at full lower position. 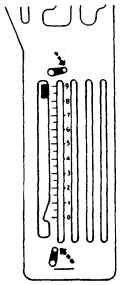		RS Lowers → GO TO STEP 6 RS Will NOT Lower → GO TO STEP 7

STEP	SEQUENCE	RESULT
6	Sensing cylinder packing leaking. (If equipped with vent kit) 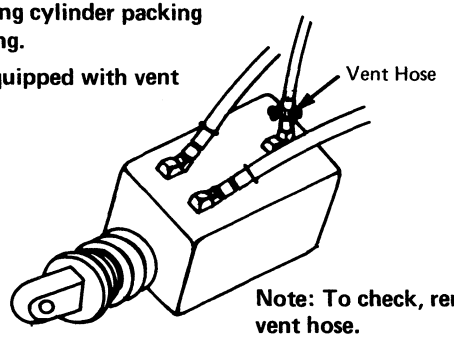 Note: To check, remove vent hose.	RS load control valve filter orifice is deteriorated. 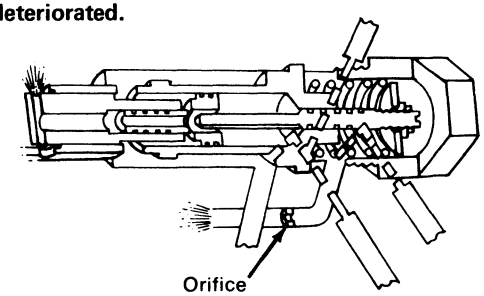 	Repair. Then . . . → GO TO STEP 3
7	RS Sensing Cylinder. Piston stuck open. 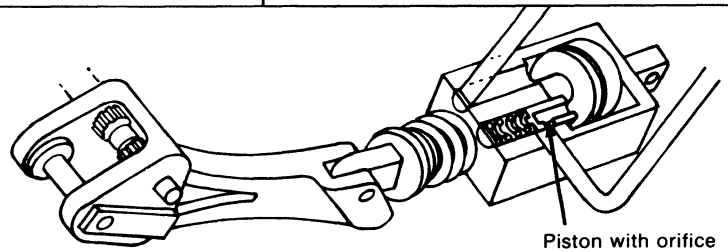 		Repair. Then . . . → GO TO STEP 3
8	Disconnect PCV pressure line at hinge. (RH side) 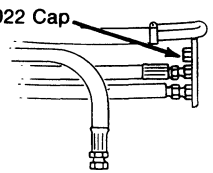 	Adjust engine speed to get 10 psi lube pressure. 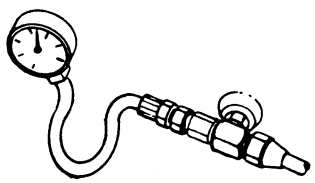	Turn in to destroke main pump. 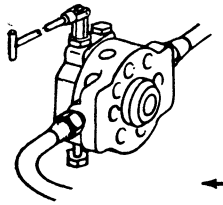 ← Back out destroking screw Check lube pressure. 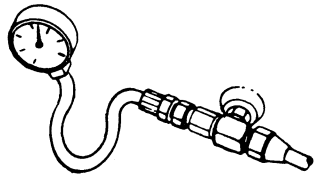	0-3 PSI Increase → GO TO STEP 9 More than 3 PSI Increase → GO TO STEP 10 (Re-connect PCV line after test or repair)
9	You have a high pressure leak to sump in the rockshaft Possible Areas Are: 1. With RS fully raised, O-rings on inlet sleeve to RS cylinder leaking. (To Isolate: Connect oil line, lower RS and repeat STEP 3). 2. Thermal Relief Valve leaking. 3. RS pressure valve metering shaft or guide scored. 4. O-rings on inlet sleeve to RS valve housing leaking. NOTE: If leak is not in the RS, you may have a high pressure leak to return and a return leak to sump. Make STEP 25 to check for a return leak to sump, then repeat STEP 3.			Repair. Then . . . → GO TO STEP 3

R32719

Litho in U.S.A.

STEP	SEQUENCE			RESULT
10	You have a high pressure leak to sump in the power brake or differential lock valve. Cap off these components one at a time. Destroke main pump and observe lube pressure. Lube pressure will continue to increase more than 3 psi until you have capped off the leaking component. When you have isolated the leaking component lube pressure increase will be less than 3 psi.			Repair. Then . . . → GO TO STEP 3
11	HIGH PRESSURE TO RETURN LEAKAGE FROM: Selective Control Valve Rockshaft Pressure Control Valve Steering Valve	Disconnect return line at right side of hinge. 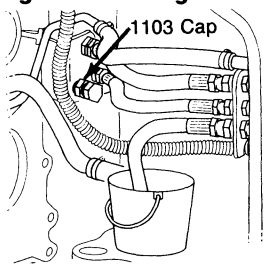 	At 1000 rpm, and all valves in neutral, measure leakage for one minute. 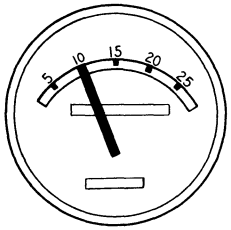 	SPEC. Maximum Leakage: (480 cc)/min.	Less than 1 qt. per minute. → GO TO STEP 16 More than 1 qt. per minute. → GO TO STEP 12
12	SELECTIVE CONTROL VALVE LEAKAGE TEST:	Install 5000 PSI gauge in SCV coupler. 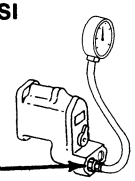 Move SCV control lever to get 1500 PSI on gauge. Allow SCV lever to neutralize.	Observe gauge after one minute. Repeat test in each SCV outlet.	SPEC. Less than 500 PSI change (normal leakage) More than 500 PSI decrease (excessive leakage at return valve) More than 500 PSI increase (excessive leakage at pressure valve)	In Spec. → GO TO STEP 13 Out of Spec. Repair, then . . . → GO TO STEP 3
13	(NO RS - Go to STEP 15) ROCKSHAFT SURGE RELIEF VALVE TEST Remove oil line from left side of No. II SCV and direct into container.	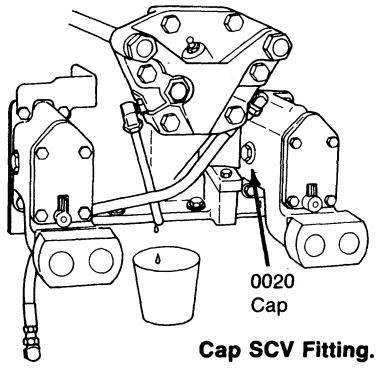 Cap SCV Fitting.		SPEC. (With RS Fully Raised) Maximum Leakage: 1 Pint (480 cc)/min. NOTE: Reconnect oil line after Testing or Repair.	In Spec. → GO TO STEP 14 Out of Spec. Repair valve . . . → REPEAT STEP 13

R32729

Litho in U.S.A.

STEP	SEQUENCE		RESULT
14 **ROCKSHAFT VALVE LEAKAGE TEST:** **Check valve adjustment (for details, see Group 30 of this Section).**	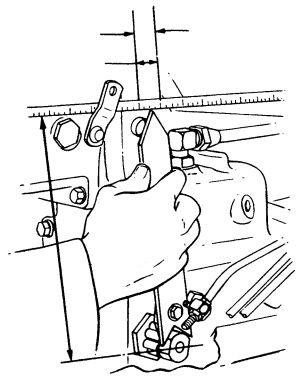	**SPEC.** **Valve clearance = 3/16 to 3/8 inch movement at 10 inch extension.** **If valve clearance is OK, check for scored valves or damaged valve parts.**	**Satisfactory** → **GO TO STEP 15** **Unsatisfactory. Repair, then . . .** → **GO TO STEP 3**
15 **PRESSURE CONTROL VALVE INSPECTION:**	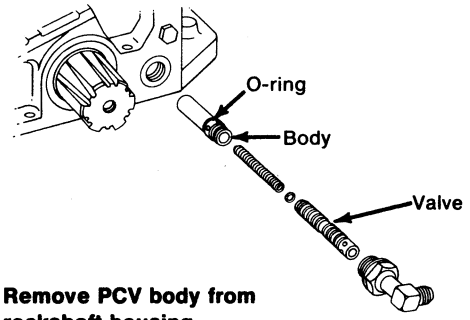 **Remove PCV body from rockshaft housing.**	**Inspect for:** **1. Valve scoring.** **2. Body O-ring damage.**	**Satisfactory** → **GO TO STEP 17** **Unsatisfactory. Repair, then . . .** → **GO TO STEP 3**
16 **You have a possible high pressure leak to return in the power steering. Feel steering valve and return lines for excessive heating and confirm.**			**Repair, then . . .** → **GO TO STEP 3**

R29346

Litho in U.S.A.

STEP	SEQUENCE			RESULT
17 LUBE REDUCTION VALVE TEST: Adjust engine speed to get 10 psi lube pressure. 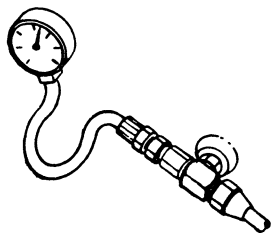	Depress clutch pedal 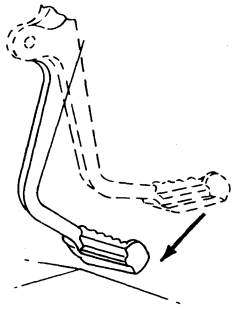	Observe lube gauge for DIP in pressure as you . . . (3) 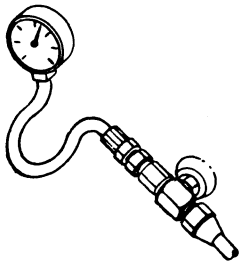	Engage clutch very slowly 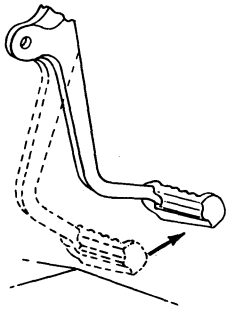	Lube Dips — GO TO STEP 19 No Dip — GO TO STEP 18
18 The lube reduction valve is probably stuck. Complete testing before repairing.				GO TO STEP 19
19 ELEMENT LEAKAGE TEST: With transmission in PARK disconnect cable from upper shifter arm. DO NOT MOVE ARM. 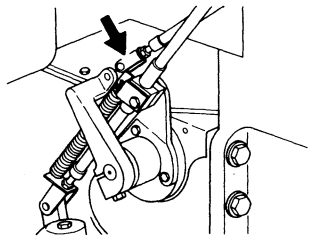	With all control valves in neutral, adjust engine speed to get 10 psi lube pressure. NOTE: Less than 5 psi at WOT, continue testing. 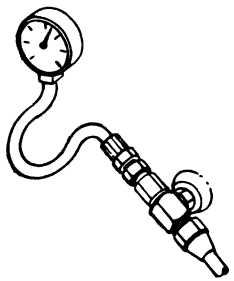	Record lube pressure (4) when you . . . 1. Engage PTO clutch 2. Engage PTO brake 3. Shift to "A" Range & 1st gear (release clutch) 4. Shift to 2nd gear (clutch released)	SPECS If lube pressure changes more than 3 psi, there is excessive leakage in circuit with lower pressure. Reconnect shift linkage before releasing tractor.	In Spec. Shift to Park — GO TO STEP 21 Out of Spec. — GO TO STEP 20

R29347

Litho in U.S.A.

STEP	SEQUENCE		RESULT
20 If leakage was found in PTO clutch or brake circuit, position PTO lever to get the higher lube pressure.	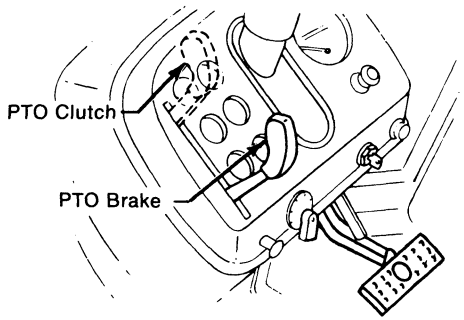	Complete test procedure before repairing PTO clutch or brake circuit.	GO TO STEP 21
OR			
If leakage is found in two-speed circuit, place speed selector lever at speed selection to get the higher lube pressure.	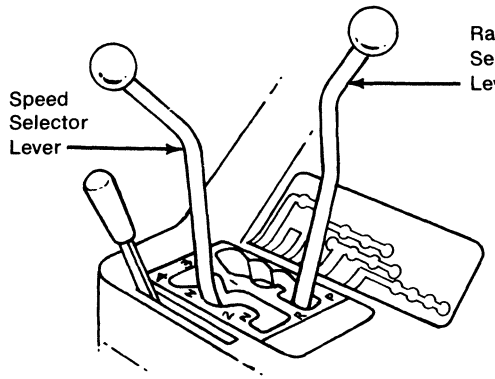	Complete test procedure before repairing two-speed circuit.	GO TO STEP 21
21 Clutch Circuit Leakage Test 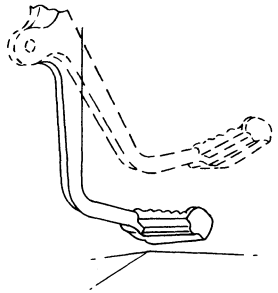	Observe lube gauge before and after depressing clutch pedal. 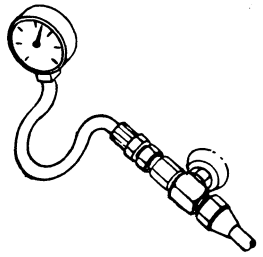	If pressure increases more than 5 psi, tie pedal in depressed position. Continue testing before repairing clutch circuit. 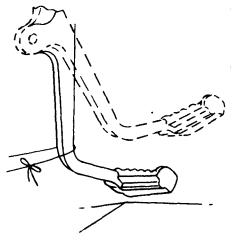	GO TO STEP 22

R32730

Litho in U.S.A.

STEP	SEQUENCE			RESULT	
22 CLUTCH AND LUBE PRESSURE TEST: At 2000 engine rpm 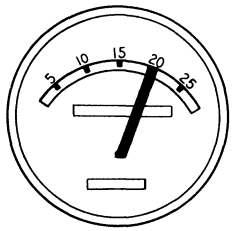	Record clutch pressure (5) 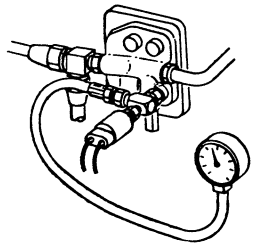	Record lube pressure (6) 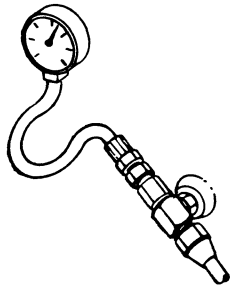	SPEC. Clutch Pressure 170-180 psi Lube Pressure (minimum) 110°F. - 42 psi 150°F. - 30 psi	Clutch Pressure / Lube Pressure	
				OK / OK	GO TO STEP 26
				Low / OK	GO TO STEP 23
				OK / Low	GO TO STEP 24
				Low / Low	GO TO STEP 32
				Low / Less than 5 psi at WOT	GO TO STEP 40
23 Add shims to increase pressure. Remove shims to decrease pressure. (Approximately 5 PSI per shim)	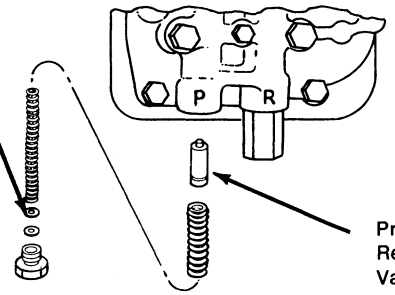				GO TO STEP 22
24 Disconnect return line at right side of hinge. 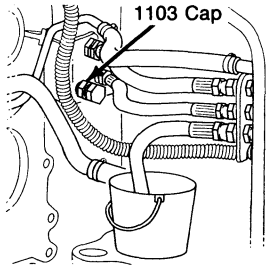 Reconnect after test.	With all control valves in neutral and at 2000 rpm . . . 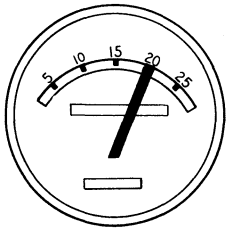	Record lube pressure 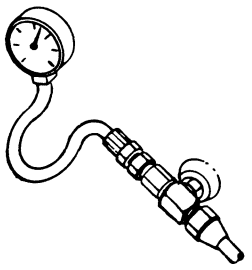	SPEC. (minimum) 110°F. - 42 psi 150°F. - 30 psi	In Spec.	GO TO STEP 25
				Out of Spec.	GO TO STEP 32

R32724

Litho in U.S.A.

Litho in U.S.A.

STEP	SEQUENCE			RESULT
25 Oil was leaking to sump at the Return Oil Filter Relief Valve Housing Gasket OR no plug in case behind housing. 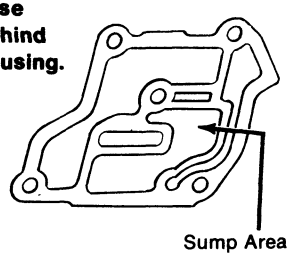	Remove housing . . . 1. For inspection and replacement of gasket. Be sure gasket matches housing. 2. To check for plug in place in transmission case. 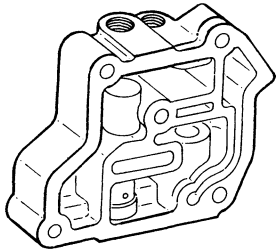			Repair, then . . . — GO TO STEP 22
26 RETURN TO SUMP LEAKAGE TEST: At 1500 engine rpm 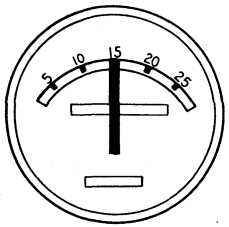	Record lube pressure 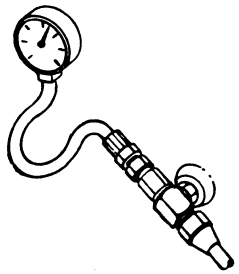	Move SCV lever to circulate oil. 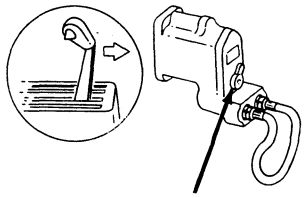	Readjust engine speed to 1500 rpm. Record lube pressure. 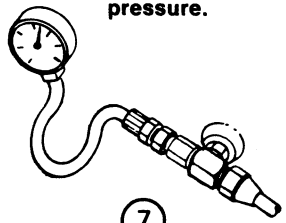 Example: (7) 21 psi (8) −19 psi 2 psi	0-2 psi Decrease — GO TO STEP 28 More than 2 psi Decrease — GO TO STEP 27
27 Possible Causes of return system leak to sump are:	1. Manual bypass valve open (if equipped). 2. Return oil filter may be partially restricted. 3. Return oil filter relief valve housing gasket leaking. 4. Rockshaft bottom cover cracked or packing leaking. 5. Rockshaft (shaft) O-rings leaking.			Repair and — GO TO STEP 26
28 STANDBY PRESSURE TEST: With all valves in neutral.	At 2000 Engine RPM 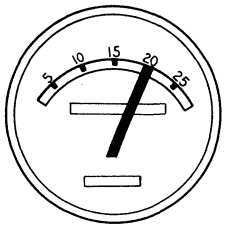	Record standby pressure 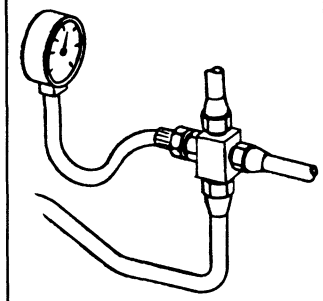	SPEC. 2250-2300 psi	In Spec. — GO TO STEP 30 Out of Spec. — GO TO STEP 29

Litho in U.S.A.

STEP	SEQUENCE			RESULT
29	Adjust stroke control valve by loosening lock nut and turn screw in to increase pressure or out to decrease pressure. 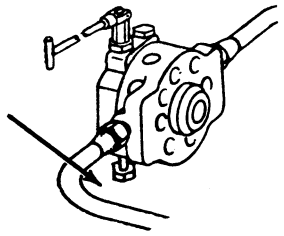			GO TO STEP 28
30 PRESSURE CONTROL VALVE TEST: At 800 engine rpm. 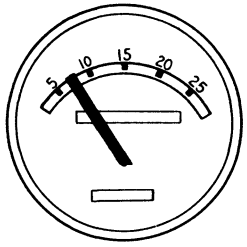	Move SCV lever to circulate oil. 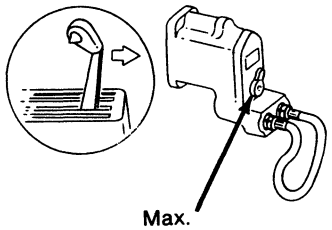	Record pressure at junction block. 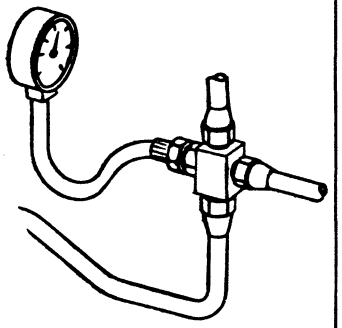	Pressure control valve SPEC. 1600-1700 PSI	In Spec. at 110°F. Heat oil to 150°F. — GO TO STEP 3 In Spec. at 150°F. — GO TO STEP 46 Out of Spec. — GO TO STEP 31
31 Adjust pressure control valve: Add shims to increase; remove shims to decrease pressure. 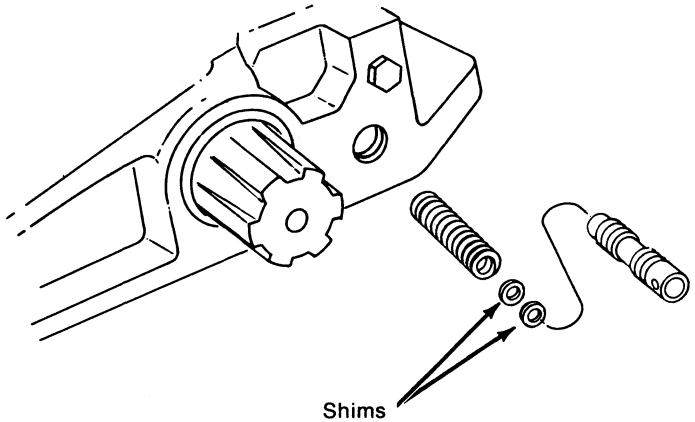				GO TO STEP 30

NOTE: Inability to adjust PCV indicates restriction at:
1. PCV and body.
2. SCV (try a second SCV).
3. Pressure or return passages in rockshaft housing.

STEP	SEQUENCE			RESULT
32	**Connect flow meter as shown:** **Fully open control valve before starting engine.** 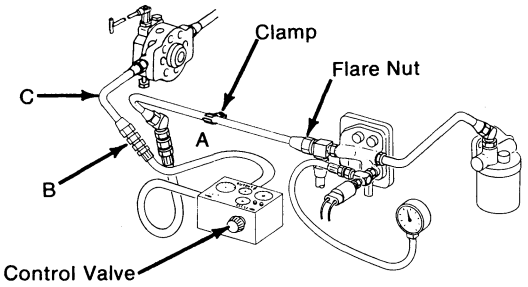 **A - 6741 45° reducing elbow** **B - 6743 Reducing union** **C - 6768 90° oil line** NOTE: Loosen clamp and flare nut to rotate oil line.			GO TO STEP 33
33	**COOLER RELIEF VALVE TEST:** **With all control valves in neutral.**	**At 1000 Engine RPM** 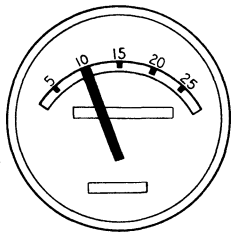	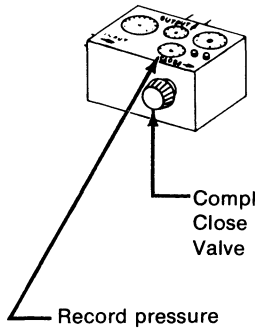	**SPEC.** **115 - 135 PSI** Completely open Flow Meter Control Valve after test.	**In Spec.** → **GO TO STEP 35** **Out of Spec.** → **GO TO STEP 34**
34	**1. Inspect cooler relief valve for scoring.** **2. Check spring compression (replace if low or high).**	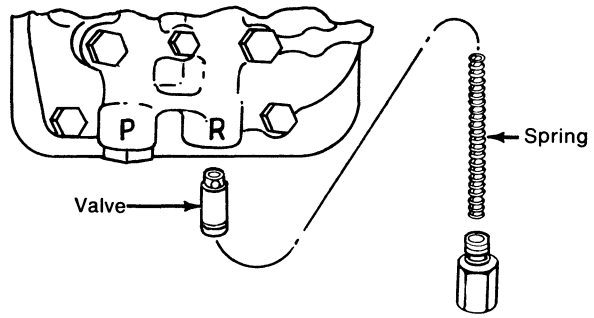		**SPEC.** Compression 4.54 in. at 36.5-44.5 lbs.	**GO TO STEP 33**

Litho in U.S.A.

STEP	SEQUENCE			RESULT
35 HIGH PRESSURE TO RETURN LEAK TEST: With all control valves in neutral and at 1000 engine rpm. 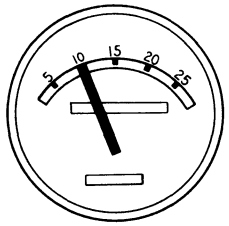	Record GPM (12) 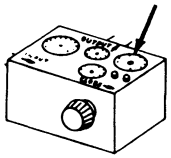	Turn in to destroke main pump. 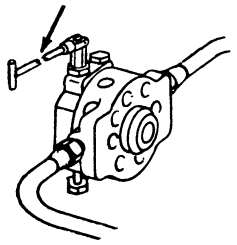	Record GPM (13) 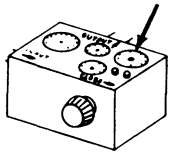 Back out destroking screw	Less than 0.5 GPM decrease — GO TO STEP 37 More than 0.5 GPM decrease — GO TO STEP 36
36 High pressure leak to return from Power Steering				Repair, then . . . — GO TO STEP 35
37 With transmission in PARK, disconnect cable from upper shifter arm. DO NOT MOVE ARM. 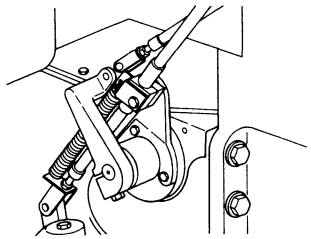	With all control valves in neutral, adjust engine speed to 10 PSI lube pressure. 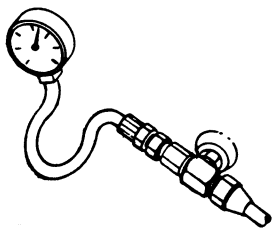	Record flow (14) when you . . . 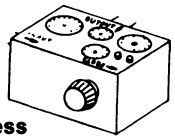 1. Depress clutch pedal (release after check). 2. Engage PTO clutch. 3. Engage PTO. 4. Shift to "A" range & 1st gear (release clutch). 5. Shift to 2nd gear (clutch released).	SPEC. If flow changes more than 1 GPM, there is excessive leakage in the circuit with lower flow. Reconnect shift linkage before releasing tractor.	In Spec. Shift to Park. — GO TO STEP 39 Out of Spec. — GO TO STEP 38

R29353

Litho in U.S.A.

STEP	SEQUENCE		RESULT
38 **If leakage was found in the Perma-Clutch circuit, tie the clutch pedal in a depressed position.**	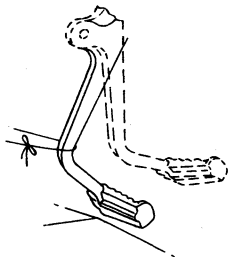	**Complete test procedure before repairing clutch circuit.**	**GO TO STEP 39**
OR			
If leakage was found in PTO clutch or PTO brake circuit, position PTO lever to get the higher flow.	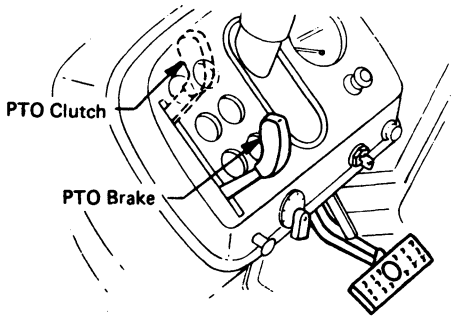	**Complete test procedure before repairing PTO clutch or PTO brake circuit.**	**GO TO STEP 39**
OR			
If leakage was found in 2-speed circuit, place Speed Selector Lever at speed selection to get the higher flow.	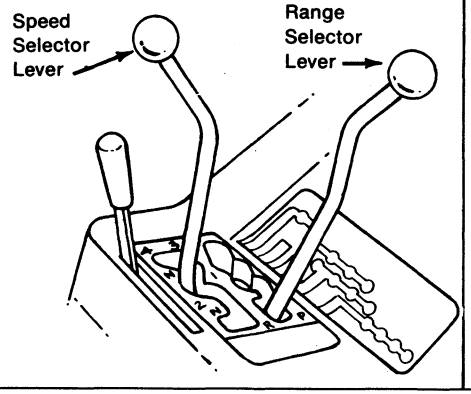	**Complete test procedure before repairing 2-speed circuit.**	**GO TO STEP 39**

R29354

Litho in U.S.A.

STEP	SEQUENCE			RESULT
39 **CHARGE CIRCUIT CAPACITY TEST:** **Move SCV lever to flow oil to sump.** 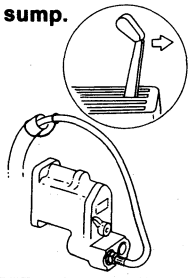	**At 2000 Engine RPM** 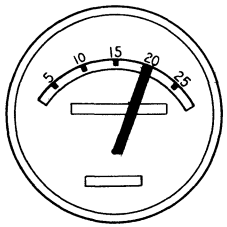	**Adjust SCV flow to get 4-6 PSI lube pressure.** 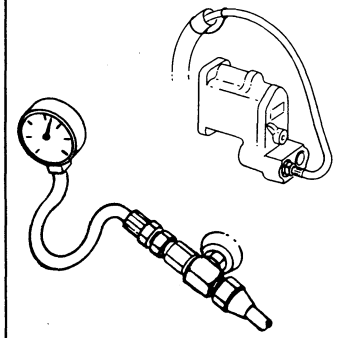	**Record flow** (15) 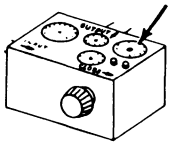 **SPEC** **17 GPM @ 110°F** **16 GPM @ 150°F**	**In Spec. at 110°F. Heat oil to 150°F.** — **GO TO STEP 33** **In Spec. at 150°F. Remove flow meter.** — **GO TO STEP 44** **Out of Spec.** — **GO TO STEP 40**
40 **Move flow-meter inlet hose to filter relief valve housing outlet as shown.** 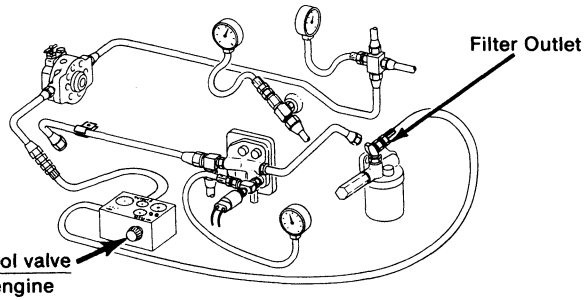 Filter Outlet Fully open control valve before starting engine				**GO TO STEP 41**
41 **Move SCV lever to flow oil to sump.** 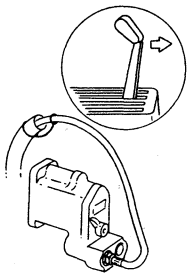	**At 2000 Engine RPM** 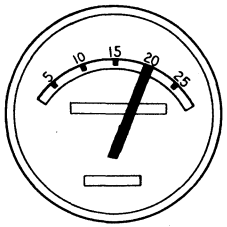	**Adjust SCV flow to get 4-6 PSI lube pressure.** 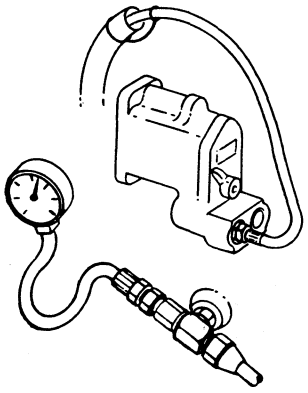	**Adjust control valve to 175 PSI. Record flow.** 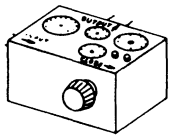 **SPEC.** **18 GPM @ 150°F** **CAUTION: DO NOT EXCEED 300 PSI.**	**In Spec.** — **GO TO STEP 42** **Out of Spec.** — **GO TO STEP 43**

R29355

Litho in U.S.A.

Litho in U.S.A.

STEP	SEQUENCE			RESULT
42	**Oil is leaking in pressure regulating valve housing area. Check the following:** **1. O-rings on adaptor for two-speed planetary.** **2. Gasket between clutch valve housing and pressure regulating valve housing.** **3. Plugs in planetary brake housing or clutch operating piston housing. (Use air to check further)** **4. Missing packing between clutch operating piston housing and planetary brake housing.** **5. Sand hole or crack in pressure regulating valve housing.**			**Repair – move flow-meter inlet hose as shown in Step 32.** → **GO TO STEP 37**
43	**There is a lack of charge oil from the filter relief valve housing. Check the following:** **1. Filter relief valve and spring.** **2. Suction screen.** **3. Filter relief valve housing and gasket.** **4. Clutch pump, suction tube, and O-rings on tube.**			**Repair – move flow-meter inlet hose as shown in Step 32.** → **GO TO STEP 39**
44	**LUBE CIRCUIT TEST:** **With all control valves in neutral.**	**At 1500 Engine RPM** 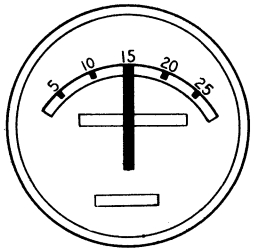	**Record lube pressure** 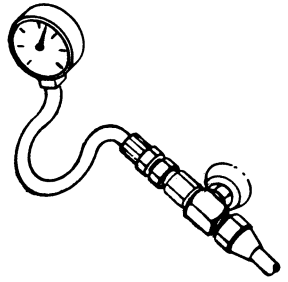	**SPEC.** **18 PSI at 150° F**	**In Spec.** → **GO TO STEP 22** **In Spec. If lube was less than 5 PSI at WOT (at Step 3)** → **GO TO STEP 3** **Out of Spec.** → **GO TO STEP 45**
45	Oil is leaking from lube circuit. Check the following: 1. Front PTO shaft bearing. Cap lube line to PTO at the filter relief valve housing; repeat Step 44. NOTE: A 2 to 4 psi increase above specified lube pressure is normal. 2. Filter relief valve or housing. Remove fitting from top of filter relief valve housing and plug housing. Cap lube line to filter relief valve; repeat Step 44. NOTE: A 2 to 4 psi increase above specified lube pressure is normal. 3. O-rings on adaptor from pressure regulating valve housing to clutch operating piston housing.				**Repair, then . . .** → **GO TO STEP 44**
	4. Plugs in clutch operating piston housing. 5. Packing between clutch housing and clutch operating piston housing.				**Repair, then . . .** → **GO TO STEP 19**

Litho in U.S.A.

STEP	SEQUENCE			RESULT
46 **MAIN PUMP QUICK CHECK:** **Connect flow meter into SCV as shown.** 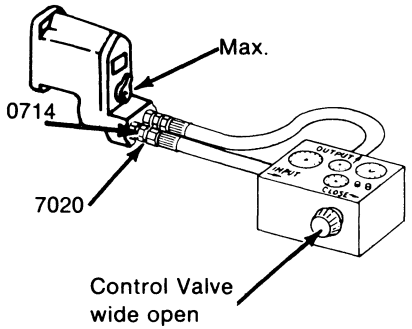	**Move SCV lever to circulate oil through meter.**	**At 1000 Engine RPM** 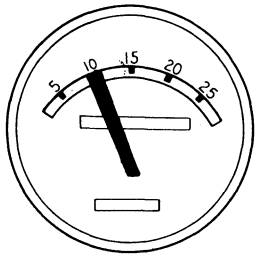	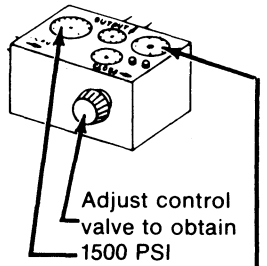 Record flow (18)	Over 15 GPM — **SYSTEM NORMAL STOP *** Below 15 GPM — **GO TO STEP 47** *If an instrument warning light is "ON". — **GO TO ELEC. DIAG.**
47 **Repeat Quick Check (Step 46) with another SCV.**				In Spec. Repair 1st SCV, then . . . — **GO TO STEP 46** Out of Spec. — **GO TO STEP 48**
48 **Connect flow-meter across main pump at hinge.** 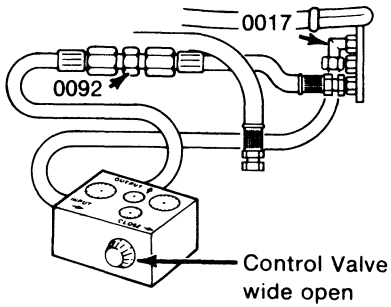	**At 2000 Engine RPM** 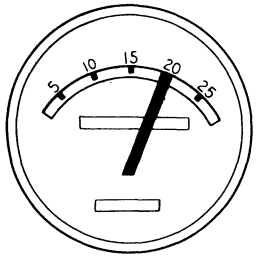	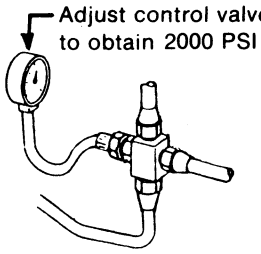 **Important: Low standby pressure will produce low flow.** NOTE: Reconnect hoses after testing or repair.	(19) Record Flow 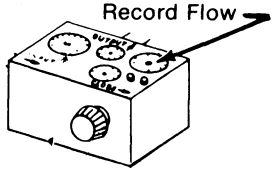	Over 28.5 GPM — **PUMP NORMAL STOP** Below 28.5 GPM repair pump. Then . . . — **REPEAT STEP 48**

Litho in U.S.A.

HYDRAULIC TESTING RECORD SHEET

(For John Deere agricultural tractors with closed-center hydraulic systems)

Owner_____ Model/Serial No. _____ Date _____

Hour Meter_____ Hydraulic Problem _____

Adjust the engine speed to get 10 PSI lube or main pump inlet pressure to check for leakage at a component or clutch element.

		Lube or Inlet Pressure		Flow Meter GPM	
		110°F	150°F	110°F	150°F
Main Pump at Standby (all valves in neutral) RPM_____		①		⑫	
Destroke Main Pump		②		⑬	
Depress Clutch Pedal (Reverser_____; Perma-Clutch_____; Power Shift _____)		③		⑭	
Engage PTO Clutch		④		⑭	
Engage PTO Brake		④		⑭	
(Utility) Hi-Clutch_____	(Utility) Forward Clutch _____	④		⑭	
(Utility) Lo-Brake _____	(Utility) Reverse Brake _____	④		⑭	
(QRT Only) Shift to "Tow"* and 1st Gear (Release Clutch Pedal)		④		⑭	
(QRT Only) "Tow"* and 2nd Gear (Clutch Released)		④		⑭	
(PST) "Tow" and Shift to Each Gear. Speed Selector Lever at:	PARK	④		⑭	
	NN	④		⑭	
	RN	④		⑭	
	1	④		⑭	
	2	④		⑭	
	3	④		⑭	
	4	④		⑭	
	FN	④		⑭	
	1	④		⑭	
	2	④		⑭	
	3	④		⑭	
	4	④		⑭	
	5	④		⑭	
	6	④		⑭	
	7	④		⑭	
	8	④		⑭	

*4WD - Shift to Park. Disconnect change cable. Shift to "A".

	RPM	110°F Pressure	150°F Pressure
Trans/Clutch Pressure	2000	⑤	
Lube or Main Pump Inlet Pressure	2000	⑥	
Lube or Inlet Pressure (Standby)	1500	⑦	
Lube or Inlet Pressure (In Stroke) Readjust RPM:	1500	⑧	
Return to Sump Leak Test: ⑦ Minus ⑧	X		
Main Pump Standby Pressure	2000	⑨	
PCV Setting: Steady_____ Pulsating _____	800	⑩	
Cooler or Surge Relief Valve Pressure	1000	⑪	
Lube Circuit Pressure Test	1500	⑰ X	

	RPM	Flow
Charge Circuit Flow to Main Pump (QRT-SRT 5 PSI Lube: Other Models 10 PSI Lube or Inlet Press. with SCV to Sump)	2000	⑮
Trans/Clutch Pump Flow at Trans/Clutch Press.	2000	⑯ X
Main Pump Quick Test (In SCV, at Max. at 1500 PSI)	1000	⑱ X
Main Pump Test (Across Main Pump at 2000 PSI)	2000	⑲ X

IDENTIFICATION OF TESTS ARE ON BACK SIDE OF THIS SHEET.

R 32647

Litho in U.S.A.

Identification of tests on Hydraulic Testing Record Sheet:

	Pressure	Flow
High Pressure Leak to Sump Test.* (Repair before further testing)	(1) and (2)	
High Pressure Leak to Return Test.* (Repair before further testing)	(1) and (2)	(12) and (13)
Depress Clutch Pedal:		
Perma-Clutch Tractors - Lube Reduction Valve Test (DIP Only)	(3)	
Perma-Clutch Tractors - Clutch Circuit Leakage Test		(14)
Power Shift Tractors-C1-C2 Circuit Leakage Test (B2 in Park; B1 in NN, RN, FN)	(3)	(14)
Reverser Tractors - Lube Reduction Valve Test	(3)	
Reverser Tractors - Clutch Circuit Leakage Test		(14)
Element Leakage Test.	(4)	(14)
Transmission/Clutch Pressure Test	(5)	
Lube or Main Pump Inlet Pressure Test.	(6)	
Return Circuit Leak to Sump Test: (Lube or Main Pump Inlet Pressure)*		
Standby	(7)	
Minus In Stroke with Jumper Hose in SCV (Lever at maximum)	-(8)	
(Repair before Pressure Control Valve or Main Pump Quick Test)		
Main Pump Standby Pressure Test:*	(9)	
Pressure Control Valve Test:	(10)	
Cooler Relief or Surge Relief Valve Pressure Test.* (Repair before further testing)	(11)	
Charge Circuit Flow to Main Pump: (SCV to Sump)		(15)
Transmission/Clutch Pump Flow		(16)
Lube Circuit Pressure Test:	(17)	
Main Pump Flow Quick Test (In SCV):		(18)
Main Pump Flow Test (Across Main Pump):		(19)

*Repair before continuing test procedure.

R29944N

Group 10
MISCELLANEOUS HYDRAULIC COMPONENTS

HYDRAULIC OIL RELIEF AND CHECK VALVES

Return Oil Charging Circuit

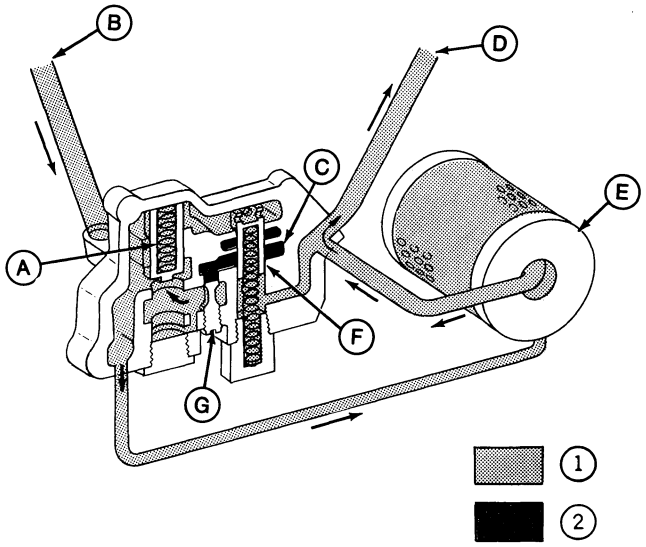

R 24947N

A—Return Oil Check Valve
B—Function Return Line
C—Transmission Case Port
D—Main Pump Inlet - Right-Hand Side
E—Return Oil Filter
F—Filter Relief Valve
G—Manual Bypass Valve*
1—Low Pressure Oil
2—Pressure-Free Oil
***Early model only**

Fig. 1-Return Oil Charging Circuit (Early Model)

The return oil charging circuit filters and directs return oil from the rockshaft and selective control valve to the right-hand side of the main hydraulic pump.

Return Oil Check Valve (A) - When a function is not used, spring force closes the valve. This prevents main pump inlet oil from returning to the function return side of the system.

Manual Bypass Valve (G) - On early model tractors, this valve is manually turned off its seat to allow function return oil to flow directly to the reservoir. This provides a faster retraction rate for single-acting remote cylinders. For normal operation, this valve MUST be closed.

Oil Filter Relief Valve (F) - A plugged filter or cold oil causes a pressure differential between the inlet and outlet sides of the filter. When this differential reaches 91 psi (6.27 Bar) the valve opens, dumping the return oil to the reservoir.

Clutch Oil Charging Circuit

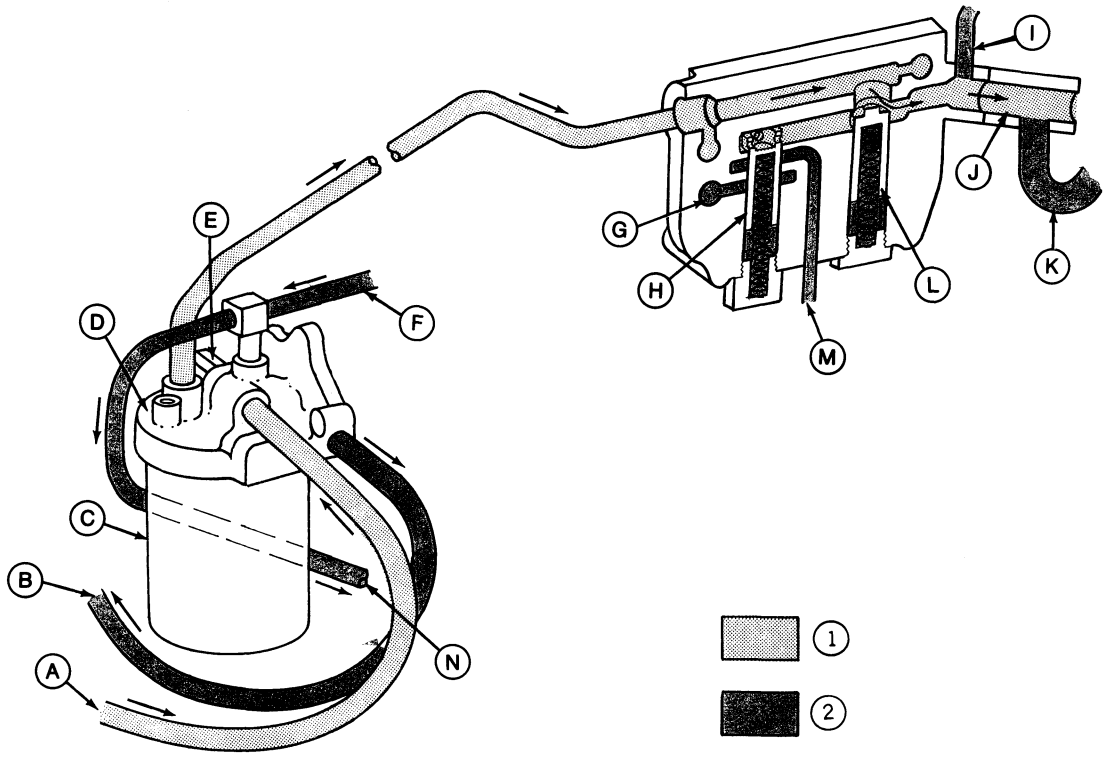

R 24948N

A—From Bottom of Transmission Case
B—To Top of Transmission Case
C—Filter
D—Clutch Oil Filter Housing
E—Filter Relief Valve Cap
F—From Oil Cooler Return
G—To Clutch Housing
H—Oil Cooler Relief Valve
I—Steering Metering Pump Return
J—To Main Pump
K—Steering Valve Return
L—Clutch Oil Pressure Regulating Valve
M—To Lube
N—To Independent PTO Lube
1—Low Pressure Oil
2—Pressure-Free or Return Oil

Fig. 2-Clutch Oil Charging Circuit

The clutch oil charging circuit pumps oil from the reservoir through the filter in the hinge area to the oil pressure regulating valve housing to operate the clutch valves. After satisfying those needs, the oil then charges the main hydraulic pump.

Clutch Oil Filter Relief Valve (E) - The valve, located in the filter housing, operates on a pressure differential caused by a plugged filter or cold oil. At a 74 psi (5.10 Bar) pressure differential, the valve opens, allowing the oil into the oil cooler return (F) and independent PTO quill lube line (N). At an 85 psi (5.86 Bar) pressure differential, the valve opens further to dump oil into the clutch housing.

Oil Cooler Relief Valve (H) - An increase in pressure, of oil flowing to the main hydraulic pump and oil cooler, over 115 psi (7.9 Bar) opens the valve to return the oil to lube (M). At 135 psi (9.3 Bar), the valve opens further to dump the oil into the clutch housing.

Clutch Oil Pressure Regulating Valve (L) - The valve maintains pressure oil to operate the clutch valves. Oil pressure above 175 psi (12.06 Bar) opens the valve to allow oil to the main hydraulic pump (J) and oil cooler.

Removal and Repair

Function Oil Filter Relief Valve Housing

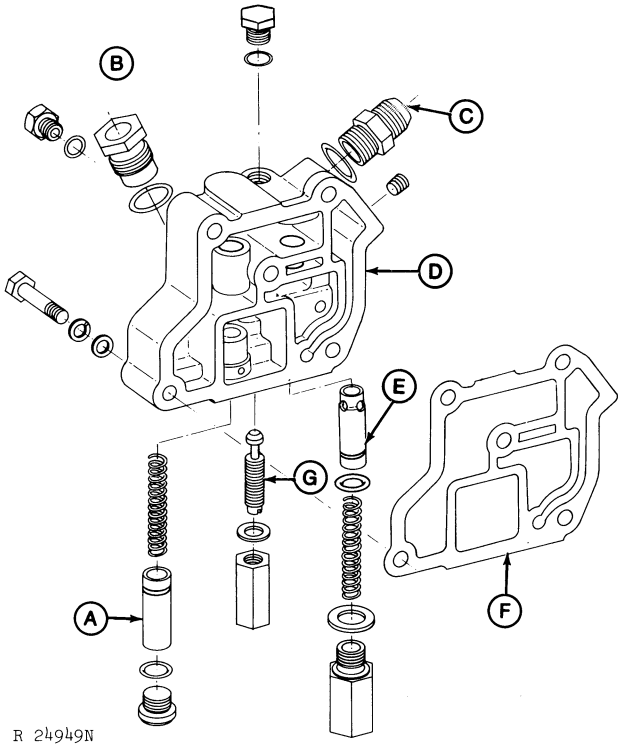

A—Return Oil Check Valve
B—Return Oil
C—To Main Hydraulic Pump
D—Housing*
E—Filter Relief Valve
F—Gasket*
G—Manual Bypass Valve*
***Early Model**

Fig. 3-Return Oil Filter Relief Valve Housing - (Early Model)

Relieve hydraulic system pressure.

Repairs to individual valves and springs can be made with valve housings on or off the tractor. However, thoroughly clean around valve housings before removing. Drain reservoir through drain plug and use a clean container to save hydraulic oil.

Be sure to mark springs and valves for identification.

NOTE: Valve removal tool JDH-53 should be used when removing the filter relief valves from both the function return relief valve housing and the clutch filter relief valve housing. (See Fig. 4).

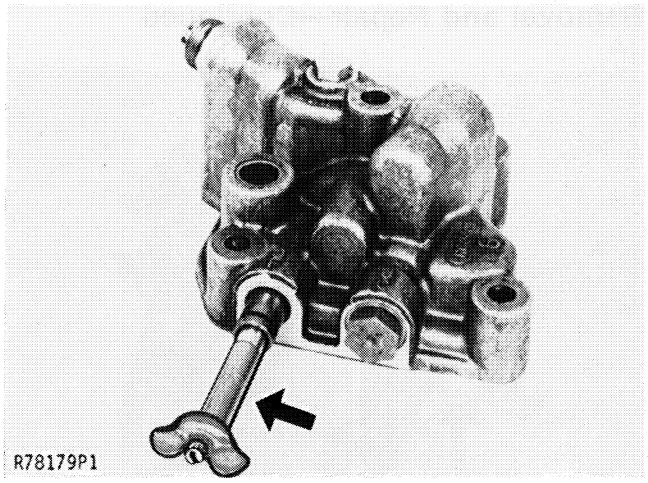

Fig. 4-Filter Relief Valve Removal (Late Model)

Check all valves, springs, seats, or bores for scoring or burrs. Slide valves in bores to check for smooth movement. Sticking or malfunctioning valves can cause a wide variety of hydraulic system problems including inadequate oil supply to the main hydraulic pump, pump inlet oil routed to the return side of the system, and excessive charge system pressures.

Examine valves and bores for contaminants that might cause valves to stick open or prevent valves from closing.

Clutch Oil Filter Relief Valve Housing

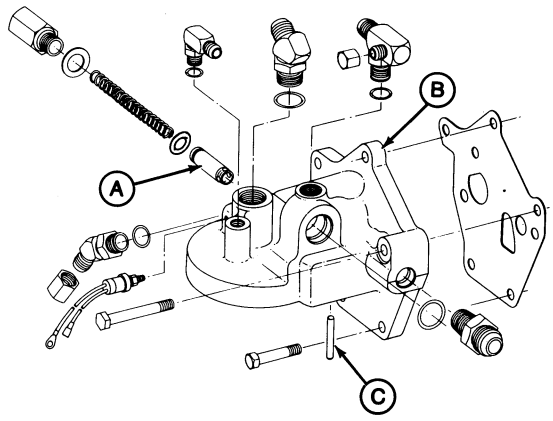

A—Filter Relief Valve
B—Clutch Oil Filter Housing*
***Early Model**
C—Filter Relief Valve Stop Pin*

Fig. 5-Clutch Oil Filter Housing - Early Model

Removal and Repair—Continued

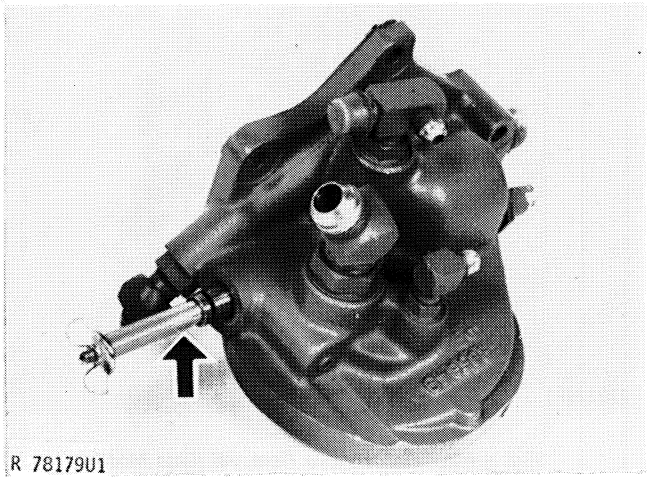

Fig. 6-Filter Relief Valve Removal (Late Model)

Examine valve springs for weak or broken coils. Weak or broken springs could allow valves to open before specified pressure is reached or hold valves closed. Use the following spring specifications to check spring compression:

Return oil check valve compressed at
10.8 to 13.2 lbs. (48 to 58.7 N) ..... 0.75 in. (19.1 mm)

Return oil filter relief valve compressed at
23.2 to 28.4 lbs. (103.2 to 126.3 N) ..... 4.31 in. (109.5 mm)

Oil cooler relief valve compressed at
36.5 to 44.5 lbs. (162 to 197.9 N) ..... 4.54 in. (115.3 mm)

Oil pressure regulating valve - outer compressed at
14.7 to 17.9 lbs. (65 to 80 N) ..... 1.63 in. (41.4 mm)

Oil pressure regulating valve - inner compressed at
42.0 to 51.4 lbs. (186 to 227 N) ..... (101.6 mm)

If filter relief valve stop pin (early models) (C, Fig. 5) is replaced, press new pin into housing flush with machined surface of housing.

Oil Pressure Regulating Valve Housing

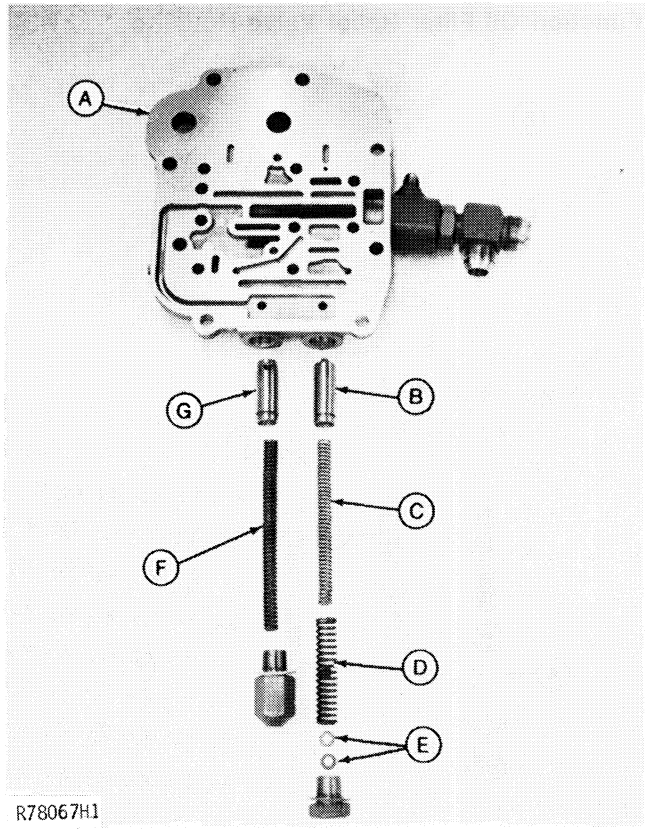

A—Pressure Regulating Valve Housing
B—Pressure Regulating Valve
C—Inner Spring
D—Outer Spring
E—Shims (Use as required)
F—Cooler Relief Valve Spring
G—Cooler Relief Valve

Fig. 7-Valve Assemblies

Installation

Reinstall valves, springs and correct number of shims. Be sure that valves and springs are returned to their proper bores. Be sure shimmed valves are properly adjusted.

Install valve housings to transmission case, hinge and clutch housing using the following torque specifications:

Return oil filter relief valve housing ..... 45 ft-lbs (61 Nm)

Clutch oil filter relief valve housing with clutch oil pump ..... 35 ft-lbs (47 Nm)

Filter screw to housing ..... 45 ft-lbs (61 Nm)

Oil pressure regulating valve housing .... 21 ft-lbs (28 Nm)

PRESSURE CONTROL VALVE

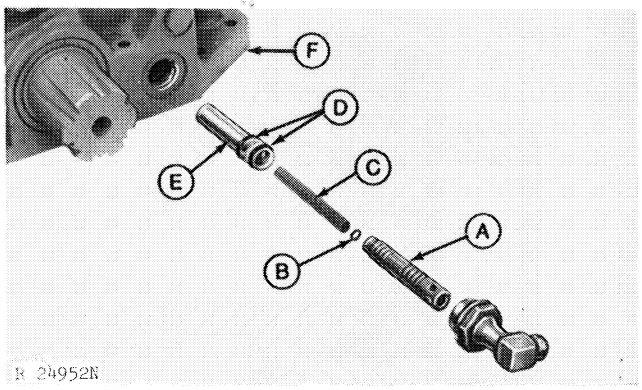

A—Pressure Control Valve with Orifice
B—Shim
C—Spring
D—O-Rings
E—Valve Body
F—Rockshaft Housing

Fig. 8-Pressure Control Valve - Tractors with Rockshaft

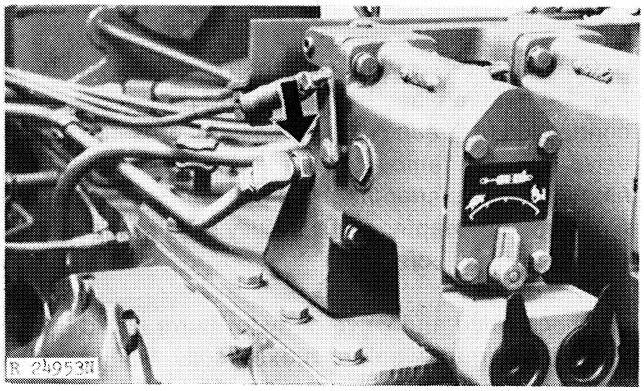

Fig. 9-Pressure Control Valve - Tractors without Rockshaft

The pressure control valve is located in a bore in the right-hand side of the rockshaft housing (Fig. 8) on tractors with rockshaft or in a bore in the left-hand side of the selective control valve manifold (Fig. 9) on no-rockshaft tractors. The valve insures pressure oil to steering and brakes when pressure oil supply is limited.

Operation

When there are no demands for pressure oil and the main pump is in "standby", pressure is equal on both ends of the valve. A low-pressure leak-off cavity (C, Fig. 10) in the middle of the valve prevents hydraulic lock.

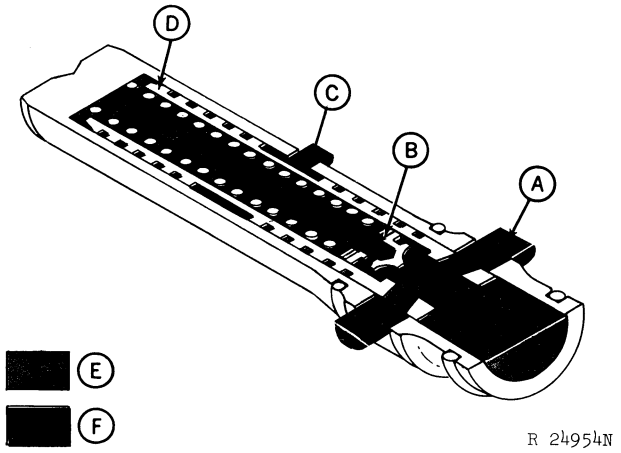

A—Rockshaft and/or Selective Control Valve Outlet
B—Orifice
C—Bleed Port
D—Valve
E—Pressure Oil
F—Return Oil

Fig. 10-Pressure Control Valve Operation

A demand for pressure oil by steering or brakes, or by a hydraulic function when the demand is greater than what the main pump can produce, will cause a pressure drop at the valve (D). Spring force at the rear of the valve moves the valve forward to restrict the function outlet (A) and direct pressure oil to steering and brakes.

When the pump rebuilds to operating pressure, the valve is moved rearward and all functions are again equally pressurized.

Testing

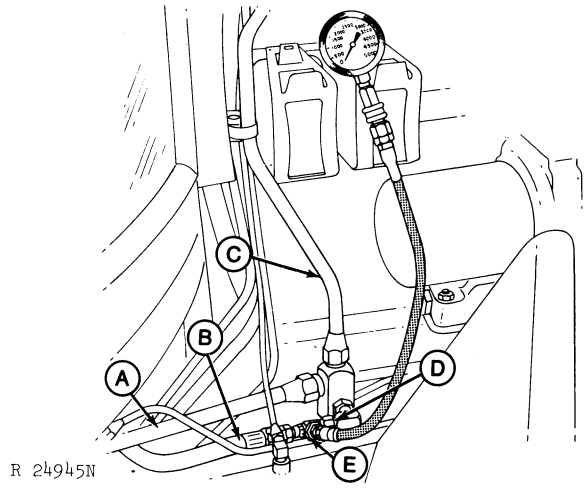

A—To Pressure Control Valve
B—To Brake Valve
C—To Steering Valve
D—ND-135-6.1 Fitting
E—D-31 Tee

Fig. 11-Pressure Gauge Installation - Early Models

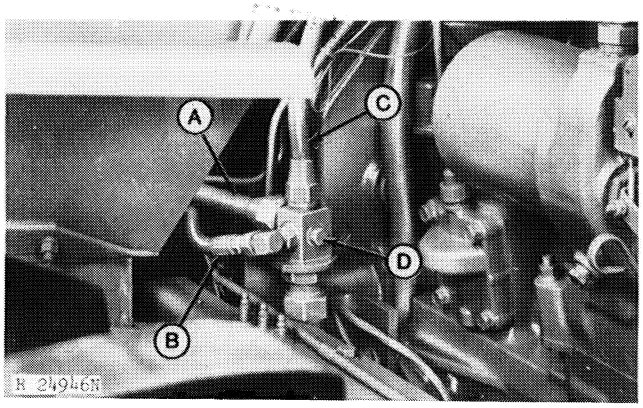

A—To Pressure Control Valve
B—To Brake Valve
C—To Steering Valve
D—Plug

Fig. 12-Pressure Gauge Installation - Later Models

Relieve hydraulic pressure.

On early models, install tee (E, Fig. 11) and 0-3000 psi (0-200 Bar) pressure gauge provided in D-15003NU Universal Pressure Test Kit into brake valve pressure line (B).

On later models, remove plug (D, Fig. 12) and install D-12 Fitting and 0-3000 psi (0-200 Bar) pressure gauge.

Install a jumper hose in the selective control valve breakaway couplers.

Operate the engine at 800 rpm and open the selective control valve.

There should be a pressure drop shown on the gauge indicating that the pressure control valve is operating. The gauge should read 1600 to 1700 psi (110.3 to 117.2 Bar).

Repair

Relieve hydraulic system pressure.

On early models, remove pressure line from pressure control valve elbow. Remove elbow from rockshaft housing or selective control valve manifold and carefully slide pressure control valve from bore.

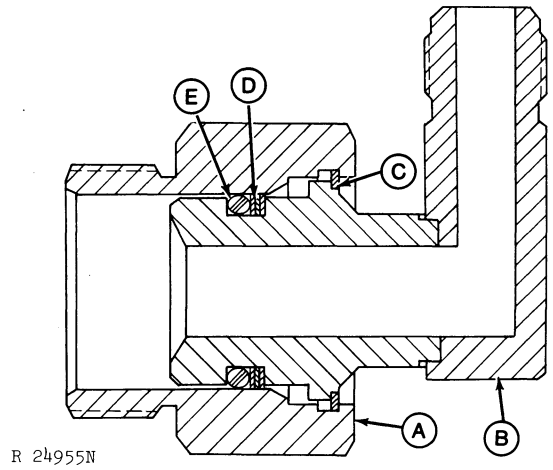

A—Adapter
B—Elbow
C—Snap Ring
D—Back-up Ring
E—O-Ring

Fig. 13-Pressure Control Valve Connection - Later Model

On later models, with rockshaft, a swivel elbow (B, Fig. 13) held in place by a snap ring (C) serves as the connection between pressure line and pressure control valve bore. To remove, disconnect pressure line from elbow. Remove snap ring and pull elbow from adapter (A). Remove adapter and carefully slide pressure control valve from bore.

Check valve and valve body for burrs and damage. Check spring for weak or broken coils. Spring should compress to 3.50 inches at 45 to 55 lbs. (88.9 mm at 200.2 to 244.7 N).

Install valve assembly with new O-rings. Install proper number of shims to maintain 1850 to 1950 psi (127.6 to 134.5 Bar) at 1700 to 1800 rpm.

Use new O-rings and back-up ring and install elbow or adapter and elbow. Connect pressure line to elbow.

Run pressure control valve test to insure proper operation.

DIRECTIONAL CONTROL VALVE

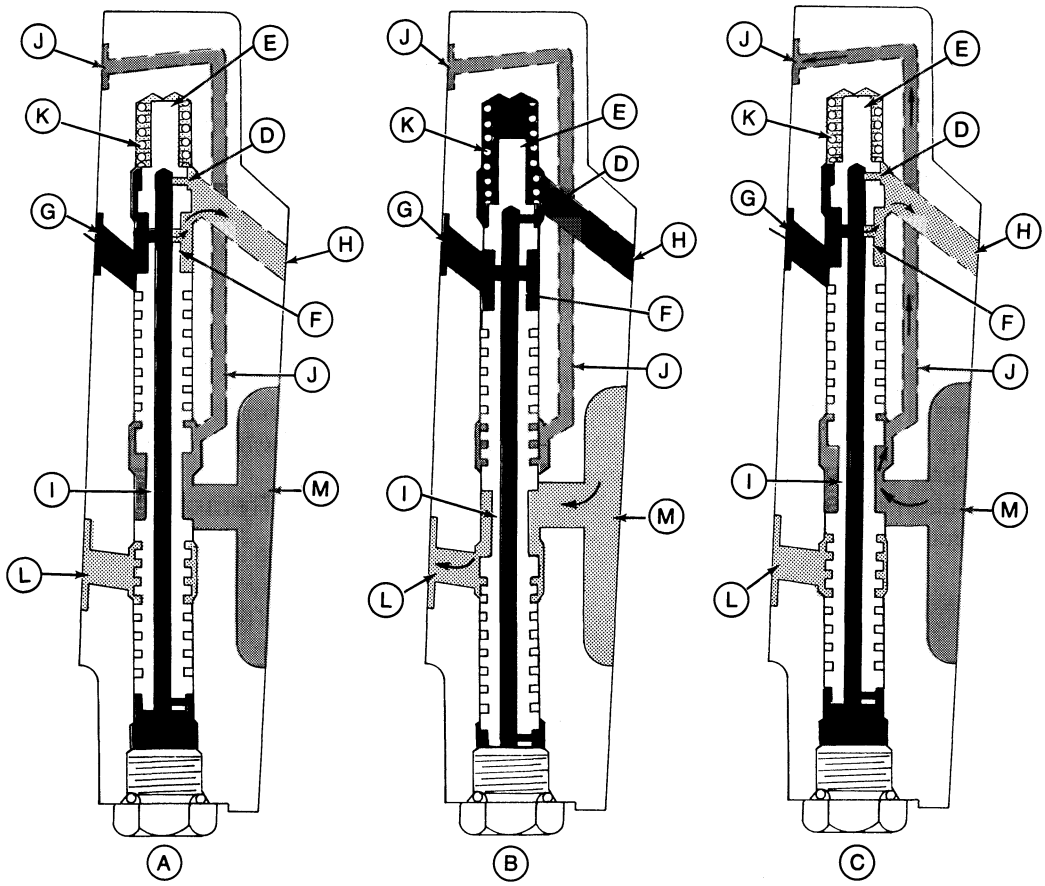

R 28497N

A—Single-Acting Cylinder-Extend
B—Single-Acting Cylinder-Retract
C—Double-Acting Cylinder-Extend or Retract
D—Orifice
E—Valve
F—Pressure Oil Land
G—Pressure Oil Inlet Port
H—Pressure Oil Outlet Port
I —Return Oil Land
J —Charge Circuit Outlet Port
K—Spring
L —Reservoir Outlet Port
M—Selective Control Valve Return Oil Inlet
System Pressure Oil
Slightly Lower System Pressure Oil
Charge Circuit Oil
Reservoir or Pressure Free Oil

Fig. 14-Directional Control Valve Operation - Tractors with Rockshaft

Operation

Extend - (A, Fig. 14)

As the selective control valve console lever is moved rearward to extend the cylinder, the demand for pressure oil (A) creates a slight pressure drop through orifice (D, Fig. 14). This allows inlet system pressure working on the bottom of the valve (E) to raise the valve and align pressure oil land (F) with ports (G and H). The return oil land (I) is aligned with the return oil charging circuit outlet port (J).

Pressure oil flows at a slightly lower system pressure through the directional control valve housing and selective control valve to extend the cylinder.

Since there is no return oil from the cylinder, there is no return oil flow through the directional control valve housing to the charging circuit.

Retract (B, Fig. 14)

When the console lever is moved forward to retract the cylinder, there is no demand for pressure oil. Without oil flow, inlet system pressure equalizes on both ends of the valve (E), allowing spring (K) to force the valve down. Return oil land (I) is aligned with the return oil reservoir outlet port (L).

Return oil forced out of the cylinder by the weight of the implement, flows through the directional control valve out port (L) through the rockshaft valve housing and into the reservoir.

Operation—Continued

Extend or Retract - (C, Fig. 14)

Directional control valve operation is the same in the extension or retraction of a double-acting remote cylinder.

The demand for pressure oil to either extend or retract the cylinder causes a pressure drop through orifice (D). This permits inlet system pressure at the bottom of the valve (E) to raise the valve and align pressure oil land (F) with ports (G and H) and return oil land (I) with port (J).

Pressure oil flows through the valve and selective control valve to extend or retract the cylinder. Return oil from the cylinder flows out port (J) through the return oil gallery in the rockshaft valve housing and rockshaft housing out to the return oil filter relief valve housing and the charging circuit.

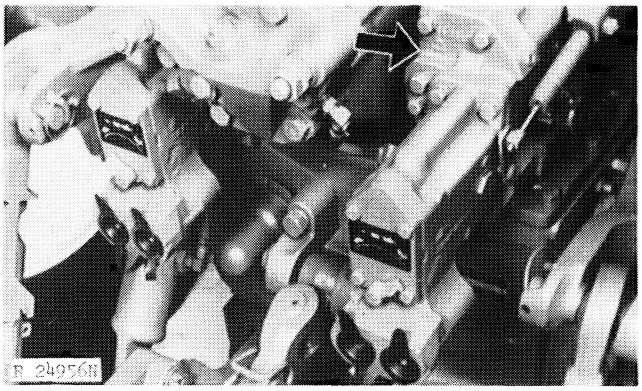

Fig. 15-Directional Control Valve - Tractors with Rockshaft

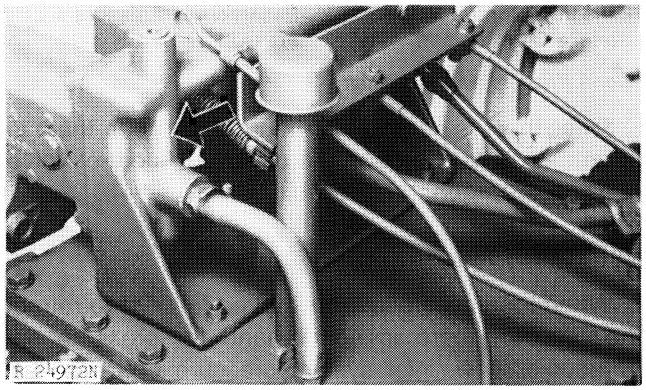

Fig. 16-Rockshaft Control Valve - Tractors without Rockshaft

On tractors with rockshaft 8430 (T1741-) and 8630 (T2453-) and tractors without rockshaft 8430 (T1252-) and 8630 (T1500-) the manual bypass valve is replaced by the directional control valve. The valve assembly consists of a housing (rockshaft control valve housing cover), valve, and spring on tractors without rockshaft or a valve and spring on tractors without rockshaft.

The directional control valve, operating in conjunction with only the right-hand selective control valve (Figs. 15 and 16), automatically directs return oil from a single-acting remote cylinder to the reservoir, but routes return oil from a double-acting cylinder to the charging circuit.

NOTE: Directional control valve operation is the same on tractors with or without rockshaft.

Single-Acting Remote Cylinder

The single-acting cylinder hose is installed in the left-hand breakaway coupler of the right-hand selective control valve. The right-hand breakaway coupler remains closed with dust plug in place.

Double-Acting Remote Cylinders

Double-acting cylinder hoses are installed in both breakaway couplers of the right-hand selective control valve.

Inspection and Repair

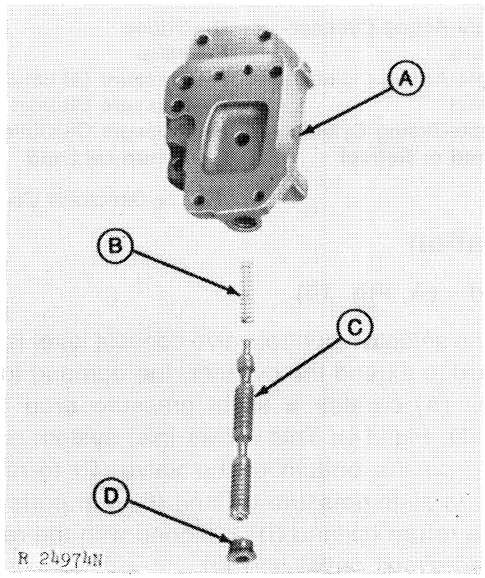

A—Housing
B—Spring
C—Valve
D—Plug

Fig. 17-Directional Control Valve Assembly

INSPECTION—Continued

Check directional control valve for proper operation. Leakage around housing or a slow retracting remote cylinder may indicate that the valve is stuck in the bore or that the spring has failed.

Relieve hydraulic pressure.

Renove valve plug and carefully slide valve from bore. Examine valve for burrs, damage or contamination.

Check valve spring for proper compression. Spring should compress to 0.75 inch at 10.8 to 13.2 lbs. (19.05 mm at 48 to 59 N).

Check housing and bore for cracks or damage.

Installation

Install spring and valve in bore of selective control valve manifold or rockshaft control valve housing cover (Figs. 16 and 17). If rockshaft equipped, install housing between selective control valve and rockshaft valve housing. Use new O-rings and packings.

NOTE: Some early model tractors may be equipped with a field-installed directional control valve. Check Parts Catalog and directions supplied with the field kit for additional parts and instructions.

OIL FILTERS AND RESERVOIR

The hydraulic system contains two oil filters. One filter is located in the transmission case and filters only return oil from the hydraulic functions. The other filter is located in the hinge area and filters charge oil from the transmission case.

Oil filters are changed at regular intervals as recommended in the Operator's Manual. When filters are installed, be sure that they are properly seated in their bores and not damaged or cocked. A cocked filter could permit space between filter sealing surface in the bore and the filter. This condition would allow unfiltered oil into the system.

For parts and on later model tractors, a 10 micron oil filter is provided for improved oil filtration.

The transmission case serves as the reservoir for the hydraulic system. The clutch housing is not a reservoir, but is a collecting point for return oil from clutch operation, lubrication and oil cooler return oil. This oil is pumped back to the transmission case by the oil transfer pump.

Each time that the transmission case, torque divider housing and clutch housing are opened for repairs, thoroughly clean before reassembling and filing.

OIL COOLER

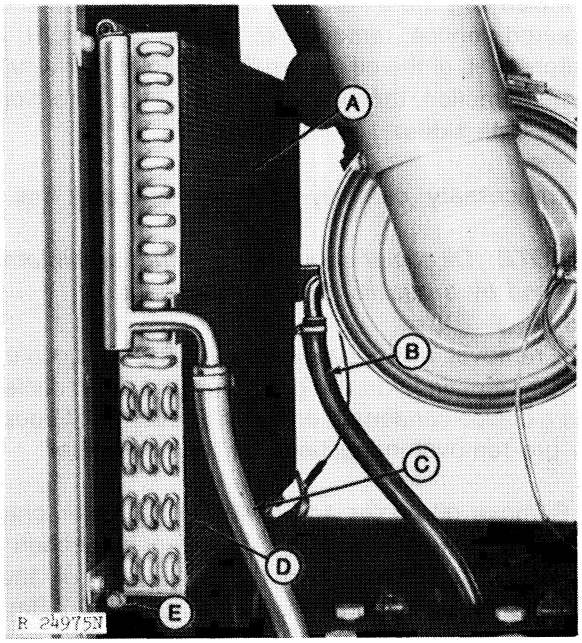

A—Hydraulic Oil Cooler
B—Oil Cooler Return Line
C—Oil Cooler Inlet Line
D—Air Conditioner Condenser
E—Cap Screw

Fig. 18-Hydraulic Oil Cooler

General Information

The oil cooler maintains hydraulic oil temperature at not more than 100°F (55.6°C) above air temperature.

On air-conditioned tractors, the air conditioning condenser is integral with the oil cooler.

Torque hose clamps on hydraulic lines to 35 in-lbs (4 Nm).

Repair

If cleaning the exterior of the oil cooler is the only required service, remove cap screws at top L.H. and bottom R.H. of the oil cooler. Slide cooler half-way out in one direction, then half-way in the other direction to clean both sides.

If necessary, carefully straighten any bent fins.

NOTE: Oil cooler should be repaired and internally cleaned by a qualified radiator mechanic.

If removal and repairs are necessary, disconnect cooler-to-main hydraulic pump line and drain cooler. If it is a cooler-condenser unit, see Section 80, Group 10 for pre-removal instructions for the condenser.

Remove oil cooler and check for leaks or cracks. Use the air test procedure as given in Section 20, Group 30. If a cooler-condenser unit, test only the oil cooler side. Use NO MORE than 300 psi (20.7 Bar) air pressure. See Section 80, Group 10 for condenser repairs.

Check oil cooler return check valve mounted in the top of the clutch housing for damage.

Be sure oil cooler is clean and dry before re-installing. Install cooler and connect hydraulic lines. See Section 80 for condenser installation.

HYDRAULIC OIL ATTENUATOR

The hydraulic oil attenuator is mounted in the main hydraulic pump pressure line. It is a small tank used to baffle and suppress hydraulic pressure oil flow sound.

The attenuator has no moving parts. It, therefore, requires no service, except to be checked for possible leakage at seams and fittings.

Oil Cleanup and Transmission Case Flushing

1. Inspect hydraulic oil, always replace if badly contaminated.

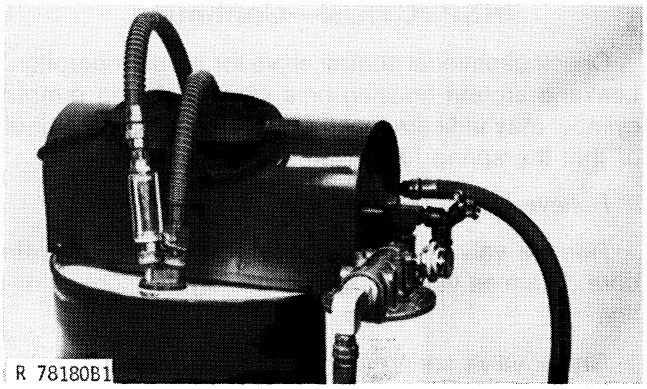

Fig. 19-D-05155ST Oil Transfer Unit

2. If oil is considered reusable, circulate the oil removed from tractor through an oil transfer unit for oil clean up (See Fig. 19).

NOTE: An oil transfer unit D-05155ST is available through Servicegard. A 10 micron conversion kit D-05156ST is available for early units.

2. During repair, remove as much foreign material as possible from bottom of transmission case and torque divider housing.

3. After repair, but before transmission-differential covers are installed, pump 10 gal. (38 L) of oil from oil caddy into a clean container and place container beneath suction screen plug port with plug and screen removed.

4. Place suction hose into container, operate transfer unit. Direct discharge into areas of transmission and differential compartments that are difficult to clean.

5. Circulate oil for minimum of 15 minutes in each compartment. Return oil to transfer barrel.

System Cleanup

NOTE: After tractor repair and as you perform the steps listed below; check filter restriction at 10 min., 30 min., 1 hr., 2 hr., and 3 hr. by doing the following:

a. Running engine at 2000 rpm, with all controls in neutral.
b. Oil temperature at least 120°F (49°C).
c. Measure pressure in filter cover.
d. Using same gauge, measure pressure at plug. If difference exceeds 50 psi (3.4 bar) (4 kg/cm²), stop tractor, replace element, and continue running.

Procedure

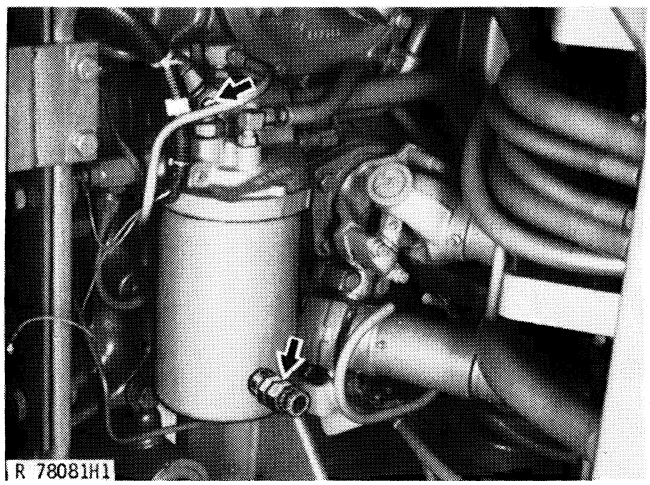

Fig. 20-Hydraulic System Clean Up Kit

1. Install filter cover with nipple and quik coupler from kit, also install a new 10 micron filter on the clutch filter relief valve housing. (See Fig. 20.)
2. Install nipple and quik-coupler in fitting as shown in Fig.
3. Run engine at 1500-1700 rpm for 30 minutes with all control valves in neutral. Cover oil cooler with a piece of cardboard to raise oil temperature.

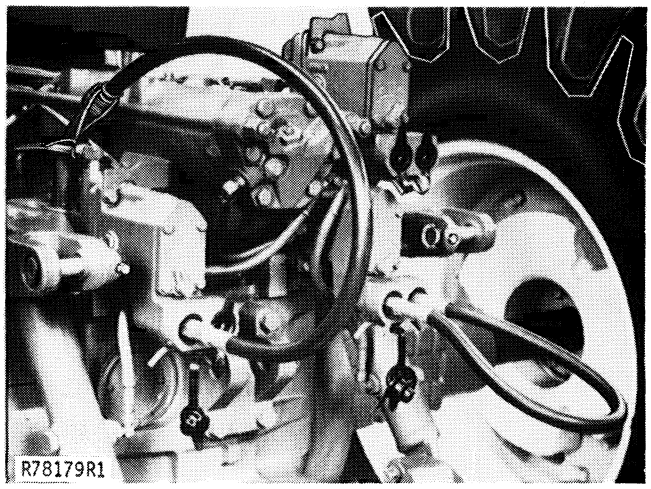

Fig. 21-Hydraulic System Clean Up

4. Install one end of a jumper hose in LH side of one SCV. Fasten other end securely in filler tube. With control lever rearward, circulate oil to sump (differential housing) with metering lever at 10:00 o'clock position and engine at 1500-1700 rpm for a minimum of 30 minutes. (See Fig. 21.)

NOTE: If hose "jumps", adjust metering lever toward turtle position to prevent pump cavitation.

5. Install jumper hose in one SCV. Flush SCV to return circuit for one minute in each flow direction. Repeat for each SCV. Cycle all hydraulic controls at 5 second intervals for one minute.

6. Continue running engine for a total of 3 hours at 1500-1700 rpm. Repeat Step No. 5 each hour.

7. Operate tractor in high gear for 15 minutes.

Returning Tractor To Field Service

1. Remove cleanup kit.

2. If more than 2 filter changes are required within 20 hours, tractor should be checked for continued generation of contaminants.

Litho in U.S.A.

Group 15
HYDRAULIC PUMPS
CLUTCH OIL PUMP AND OIL TRANSFER PUMP

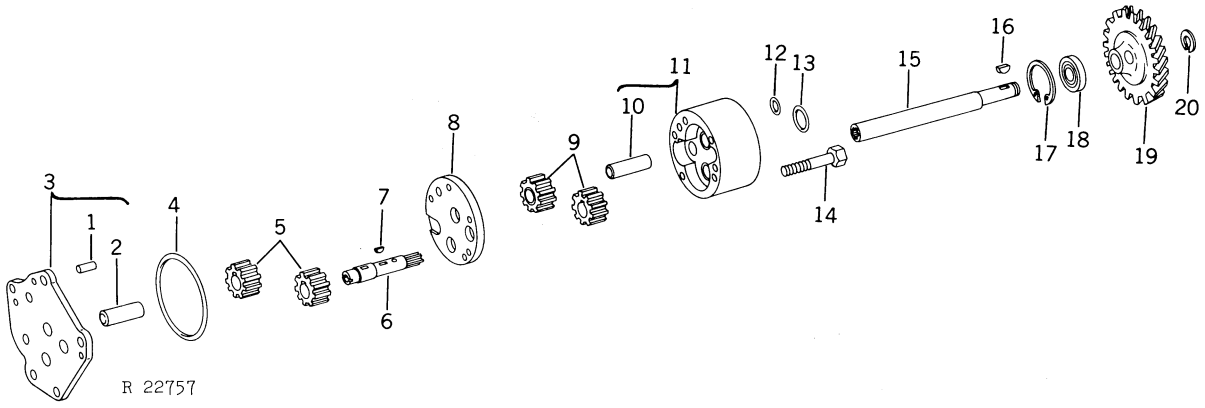

1—Dowel Pin (3 used)
2—Idler Shaft
3—Clutch Oil Pump Housing
4—O-Ring
5—Clutch Oil Pump Gears
6—Shaft
7—Woodruff Key (2 used)
8—Cover
9—Oil Transfer Pump Gears
10—Idler Shaft
11—Oil Transfer Pump Housing
12—O-Ring
13—O-Ring
14—Cap Screw (4 used)
15—Drive Shaft
16—Woodruff Key
17—Retaining Ring
18—Bearing
19—Drive Gear
20—Snap Ring

Fig. 1-Exploded View of Clutch Oil Pump and Oil Transfer Pump

GENERAL INFORMATION

The clutch oil pump and oil transfer pump (Fig. 1) supply low pressure oil for clutch operation, lubrication and charging the main hydraulic pump.

The pumps are fixed positive displacement external gear-type pumps. They are mounted in tandem in the clutch housing. The clutch oil pump housing (3) serves as the base for both pumps, with the clutch oil pump cover (8) serving as a ported separator plate between the two. The pumps share a common drive shaft.

A clutch oil pump drive shaft, splined to the clutch cover, drives the two pumps through a series of shafts and gears. The pumps are constant running when the engine is in operation.

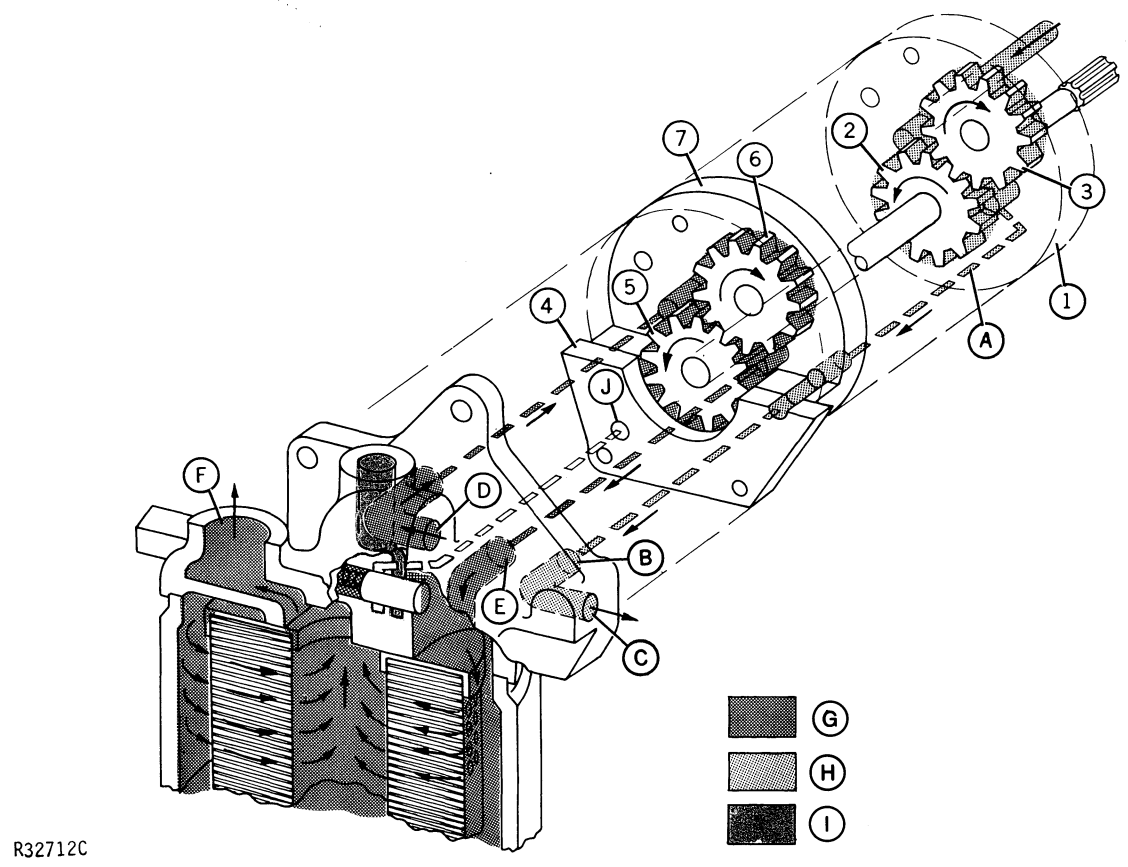

Fig. 2-Clutch Oil Pump and Oil Transfer Pump Operation

OPERATION

Oil Transfer Pump

The purpose of the oil transfer pump (1, Fig. 2) is to transfer clutch valve return oil and clutch lubrication oil from the clutch housing to the transmission case. This is to maintain a low oil level in the clutch housing for proper independent PTO operation, yet provide adequate lubrication to the clutch assembly.

As the gears (2 and 3) mesh, oil is drawn through a screen and large tube in the clutch housing into the oil transfer pump housing. The oil (H) is pumped through the housing, through gallery (A) into the clutch oil filter housing at port (B).

The oil (H) does not go through the filter, but is forced out port (C), through an external line to the top of the transmission case.

The oil transfer pump capacity is 22 gpm (83 L/m).

Clutch Oil Pump

The clutch oil pump (4, Fig. 2) draws oil from the transmission case to supply low pressure oil for clutch valve operation and charging the main hydraulic pump.

NOTE: On later models, oil pickup is in the torque divider housing.

As gears (5 and 6) mesh, oil (G) is drawn from the bottom of the transmission case (torque-divider housing) through a screen and out an external tube to the clutch oil filter housing port (D).

The oil (G) circulates through the clutch oil pump and is pumped back into the filter housing at port (E). The oil then flows across the filter relief valve, to the center of the filter, out port (F) to the oil pressure regulating valve housing.

The clutch oil pump capacity is 17 gpm (64 L/m).

If the clutch filter becomes restricted, the filter relief valve opens, allowing oil (I) to flow to lube. If the filter becomes plugged, the valve opens further, allowing oil to flow back through the pump cover (7) where it is directed to the side of the pump and out into the clutch housing (J).

DIAGNOSIS AND TESTING

Diagnosis

Low or No Pump Output

Plugged clutch housing or torque divider housing screen
Clutch oil filter plugged
Filter relief valve failure
Internal pump leakage
Damaged or broken pump drive shaft
Worn or damaged gears

Testing

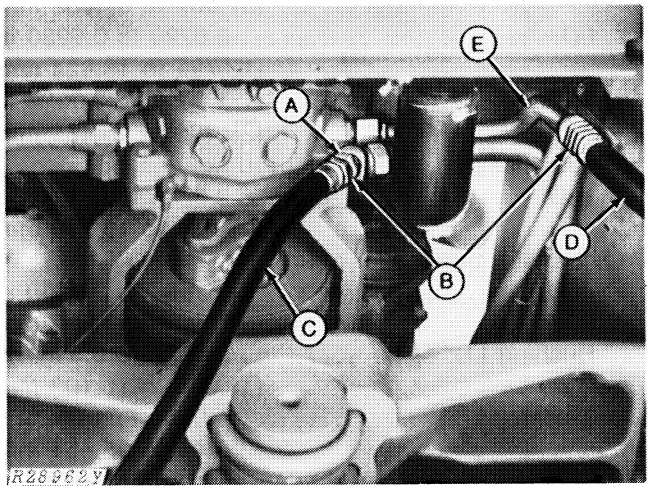

A—6741 45° Elbow
B—6743 Reducing Union (Two Used)
C—Test Unit Inlet Hose
D—Test Unit Outlet Hose
E—6768 90° Oil Line

Fig. 3-Clutch Oil Pump Flow Test Connection

Connect flow meter as shown in Fig. 3. Fittings are found in the D-15022NU Master Hydraulic Fitting Flow Test Kit.

With a jumper hose from SCV to oil filler tube, meter oil to sump to get 4 to 6 psi (28 - 41 kPa) lube pressure. The flow should be 17 gpm (1.07 L/s) at 110°F (43°C) and 16 gpm (1.01 L/s) at 150°F (66°C).

Slowly restrict flow with the flow meter control valve. Pressure should increase to 115-135 psi (7.9-9.3 bar), then hesitate. This hesitation indicates cooler relief flow and that the valve is working properly.

Service pumps, filter, or valves as indicated by diagnosis and tests.

REPAIR

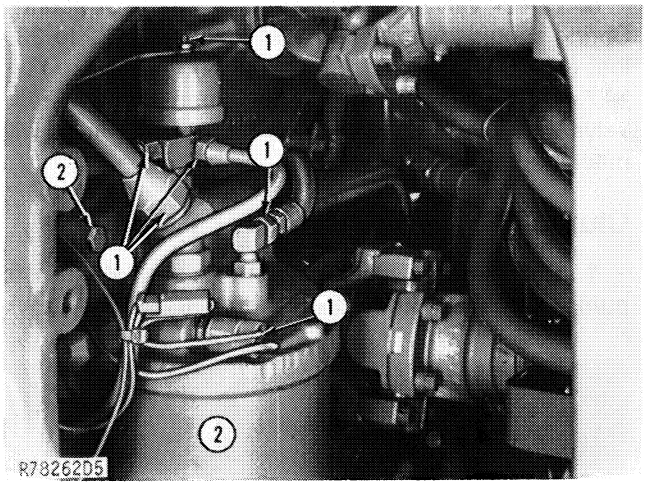

Fig. 4-Clutch Oil Filter Housing - (Late Model)

1. Relieve hydraulic pressure and disconnect hydraulic lines and wires from senders. (Fig. 4).

2. Remove filter and cap screws securing valve housing to clutch housing.

3. Install jack screws into pump base; evenly turn in to remove pumps.

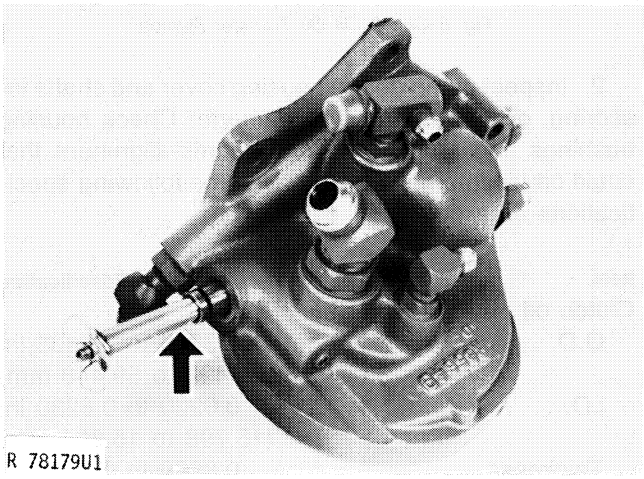

Fig. 5-Filter Relief Valve Removal

4. Remove plug and spring from filter relief valve housing. Use JDH-53 to remove valve from housing. See Fig. 5.

5. Check valve for burrs, damage, or scored conditions that could cause valve to leak or stick in bore.

REPAIR—Continued

6. Check valve and housing for damage or scoring. Spring should compress to 4.31 inches at 23.2 to 28.4 lbs. (109.5 mm at 103.2 to 126.3 N).

7. On early models, if replacement of filter relief valve stop pin is necessary, press new pin flush with machined surface of housing.

Clutch Oil and Oil Transfer Pumps

1. Disassemble clutch oil pump and oil transfer pump. Identify parts for reassembly (See Fig. 1).

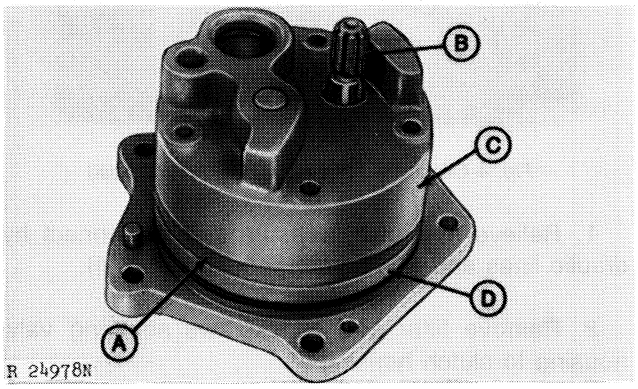

A—Clutch Oil Pump Cover
B—Pump Drive Shaft
C—Oil Transfer Pump
D—Clutch Oil Pump

Fig. 6-Clutch Oil-Oil Transfer Pumps

2. Inspect pump gears, housing cover and shafts for scoring, excessive wear, or damage. Check housing bushings and shafts for signs of mis-alignment that could cause internal leakage. Use the following specifications as a guide:

Item	Specification
Clutch oil pump driven gear	
O.D.	2.3395 to 2.3405 in. (59.423 to 59.448 mm)
I.D.	0.6220 to 0.6230 in. (15.798 to 15.824 mm)
Thickness	0.8080 to 0.8090 in. (20.523 to 20.548 mm)
Clutch oil pump idler gear	
O.D.	2.1075 to 2.1085 in. (53.530 to 53.566 mm)
Bushing I.D.	0.7518 to 0.7528 in. (19.095 to 19.121 mm)
Thickness	0.8080 to 0.8090 in. (20.523 to 20.548 mm)
Clutch oil pump idler shaft	
O.D.	0.7497 to 0.7503 in. (19.040 to 19.060 mm)
Clutch oil pump housing	
Driven gear bore I.D.	2.3465 to 2.3485 in. (59.601 to 59.651 mm)
Idler gear bore I.D.	2.1140 to 2.1160 in. (53.695 to 53.746 mm)
Drive shaft bushing I.D.	0.6232 to 0.6242 in. (15.829 to 15.854 mm)
Gear bore depth	0.8117 to 0.8133 in. (20.617 to 20.658 mm)
Oil transfer pump driven gear	
O.D.	2.2680 to 2.2690 in. (57.607 to 57.632 mm)
I.D.	0.6220 to 0.6230 in. (15.799 to 15.824 mm)
Thickness	1.0000 to 1.0020 in. (25.400 to 25.451 mm)
Oil transfer pump idler shaft	
O.D.	0.6284 to 0.6290 in. (15.961 to 15.976 mm)
Oil transfer pump idler gear	
O.D.	2.2680 to 2.2690 in. (57.607 to 57.632 mm)
Bushing I.D.	0.6330 to 0.6340 in. (16.078 to 16.103 mm)
Thickness	1.0000 to 1.0020 in. (25.400 to 25.451 mm)
Oil transfer pump housing	
Driven and idler gear bore I.D.	2.2720 to 2.2740 in. (57.734 to 57.760 mm)
Drive shaft bushing I.D.	0.6232 to 0.6242 in. (15.829 to 15.854 mm)
Gear bore depth	1.0050 to 1.0070 in. (25.527 to 25.578 mm)
Pump drive shaft	
O.D. at clutch oil pump driven gear location	0.6237 to 0.6247 in. (15.841 to 15.867 mm)
O.D. at oil transfer pump driven gear location	0.6207 to 0.6217 in. (15.765 to 15.791 mm)

3. Replace all parts that show signs of excessive wear, damage or scoring.

ASSEMBLY

Dip new O-rings and all parts in clean John Deere Hy-Gard Transmission and Hydraulic Oil. Use special care to keep all parts dirt free.

Clutch Oil Pump

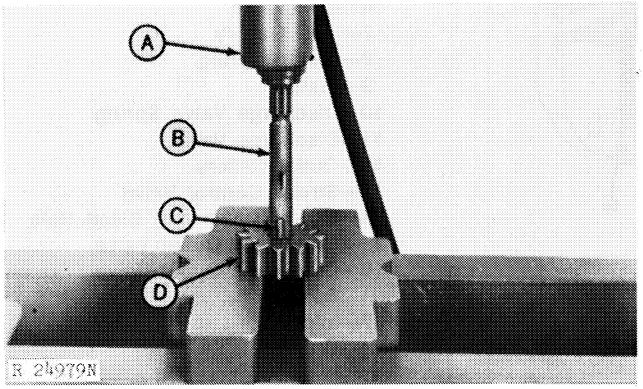

A—Press
B—Shaft
C—Woodruff Key
D—Driven Gear

Fig. 7-Installing Driven Gear on Shaft

If necessary, CAREFULLY, with keyway and Woodruff key aligned, press driven gear on to drive shaft until a minimum of 0.56 inch (14.2 mm) of shaft is protruding. While pressing gear, check prior to reaching Woodruff key to be sure that key and keyway are aligned.

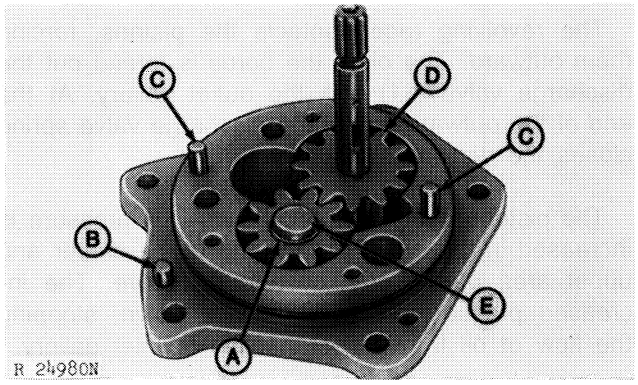

A—Idler Gear Bushing
B—Housing Flange Dowel Pin
C—Housing Face Dowel Pin
D—Driven Gear
E—Idler Shaft

Fig. 8-Clutch Oil Pump

If necessary, press dowel pin (B, Fig. 8) in pump housing flange and clutch oil pump idler shaft (E) into housing flush to 0.03 inch (0.8 mm) below filter housing side of housing.

Press two dowel pins (C) into face of housing with 0.59 inch (14.98 mm) exposed.

Install gears and cover on clutch oil pump housing.

Oil Transfer Pump

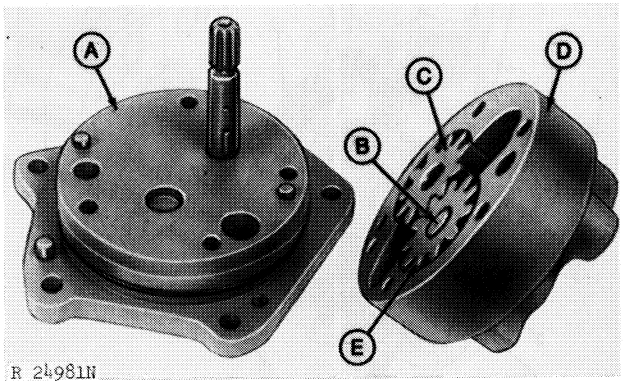

A—Clutch Oil Pump Cover
B—Driven Gear
C—Oil Transfer Pump
D—Idler Shaft
E—Idler Gear

Fig. 9-Oil Transfer Pump

If necessary, press idler shaft flush to 0.03 inch (0.8 mm) below outside of housing.

Slide driven gear onto drive shaft and Woodruff key.

Hold idler gear on idler shaft and carefully position oil transfer pump on clutch oil pump cover. Be sure that dowel pins are in holes and idler gear teeth are in mesh with driven gear teeth.

Install pump assembly cap screws and O-rings. Tighten cap screws to 21 ft-lbs (28 Nm). After cap screws have been tightened, turn shaft to be sure that gears turn freely.

Use the following torque specifications to complete installation:

Location	Torque
Clutch oil pump inlet tube bracket to transmission case	170 ft-lbs (230 Nm)
Oil transfer pump inlet tube retaining plate	20 ft-lbs (27 Nm)
Filter housing and pump assembly to front hinge	35 ft-lbs (47 Nm)
Filter cover to filter housing	45 ft-lbs (61 Nm)

For information covering clutch oil pump drive shafts and gears, see section 50, Group 5.

MAIN HYDRAULIC PUMP

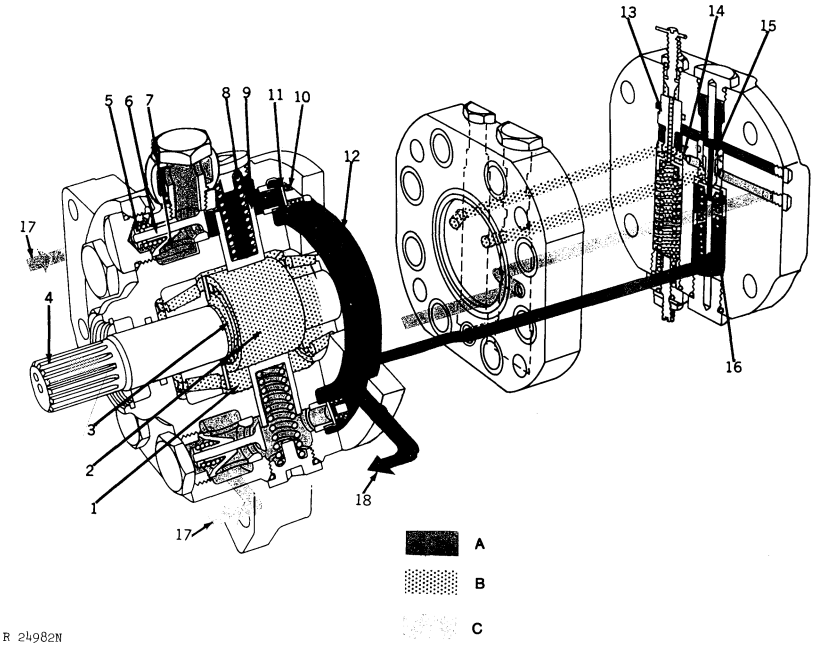

1—Crankcase Area
2—Race
3—Cam
4—Pump Shaft
5—Inlet Valve Spring
6—Inlet Valve
7—Inlet Gallery
8—Piston Spring
9—Piston
10—Discharge Valve Spring
11—Discharge Valve
12—Outlet Gallery
13—Stroke Control Valve
14—0.060″ (1.524 mm) Bleed Hole
15—Crankcase Outlet Valve
16—Crankcase Outlet Valve Spring
17—Inlets
18—Outlet
A—High Pressure Oil
B—Low Pressure Crankcase Oil
C—Low Pressure Inlet Oil

Fig. 10-Main Hydraulic Pump Operation

GENERAL INFORMATION

The main hydraulic pump is a variable displacement, constant pressure, radial piston type pump. It is mounted between the engine and radiator and driven from the engine crankshaft.

An integral cam and race with needle bearings around the cam on the pump shaft actuates the pump pistons. An adjustable stroke control valve assembly on the pump is used to adjust the pump for correct system pressure.

FOS

Refer to "Hydraulic Pumps" in FOS Manual 10—HYDRAULICS, for information on variable displacement pumps.

Operation

The crankcase area (1, Fig. 10) of the pump, in which the pump shaft and cam race are located, contains pressure oil to hold the pistons away from the race in standby position.

When there is a demand for oil by one or more hydraulic functions, pressure is reduced in the pump outlet gallery (12) and crankcase outlet valve assembly (15). The crankcase outlet valve then opens, allowing crankcase oil to enter the inlet side of the pump. This reduces pressure in the crankcase area, and the spring-loaded pistons (9) move toward the face (2).

As the pistons move toward the race, pressure is reduced at the spring end. This plus inlet oil pressure (17) opens the inlet valve (6) allowing oil to fill the piston bores. At the end of the inward stroke, pressure on each side of the valve is equal and the valve spring is able to close the inlet valve.

The revolving race contacts the pistons, forcing them outward. The oil in the bores is forced out the discharge valve (11) into the outlet gallery. At the end of the outward stroke the discharge valve spring closes the discharge valve.

The pistons continue pumping until oil pressure is increased in the outlet gallery and in the center and upper area of the crankcase outlet valve. The increased pressure forces the valve down, stopping the flow of oil from the crankcase to inlet gallery.

The increased pressure oil also flows into the stroke control valve (13), opening the valve and allowing oil into the crankcase area. The race moves the pistons out and the pressure oil in the crankcase holds the pistons away from the race. The pump is again in a standby position.

By adjusting the stroke control valve, pressure at the outlet gallery can be changed. By controlling oil pressure in the crankcase, the distance pistons move towards the race, and therefore the stroke, is controlled.

Oil leakage past pistons and stroke control valve re-enters the inlet gallery via a bleed hole below the stroke control valve and inlet gallery. This oil circulation also provides pump cooling.

DIAGNOSIS AND TESTING

Diagnosis

No Pump Output

Broken pump drive shaft
Stroke control valve open
Improper stroke control valve adjustment
Clutch oil pump leakage or failure

Hydraulic Functions Slow

Low standby pressure
Stroke control valve, spring seat, or packing failure
Crankcase outlet valve sleeve packing failure
Crankcase outlet valve stuck closed

Function Chatter

Pressure control valve malfunction
Low standby pressure
Stroke control valve, spring seat, or packing failure
Broken discharge valve spring or valve
Sticking pump pistons
Broken inlet valve
Insufficient inlet oil

Pump Noise or Squeal

Loose drive coupler or worn drive parts
Stroke control valve, spring, seat, or packing failure
Low standby pressure
Crankcase outlet valve set too high
Leaking inlet valve
Air leak at inlet connection

Low Pump Output

Low standby pressure
Stroke control valve, seat, spring, or packing failure
Leaking inlet valve
Broken discharge valve or spring
Worn or scored pistons and bores

Excessive Pump Pressure

Crankcase outlet valve filter plugged

Slow Pump Response

Crankcase outlet valve set too low
Crankcase outlet valve stuck closed

Pump and Oil Line Vibration

Crankcase outlet valve set too high
Broken or leaking inlet valve
Broken discharge valve or spring

Pump Shaft Seal Failure

Broken discharge valve
Quad ring seal failure

Main Pump Tests

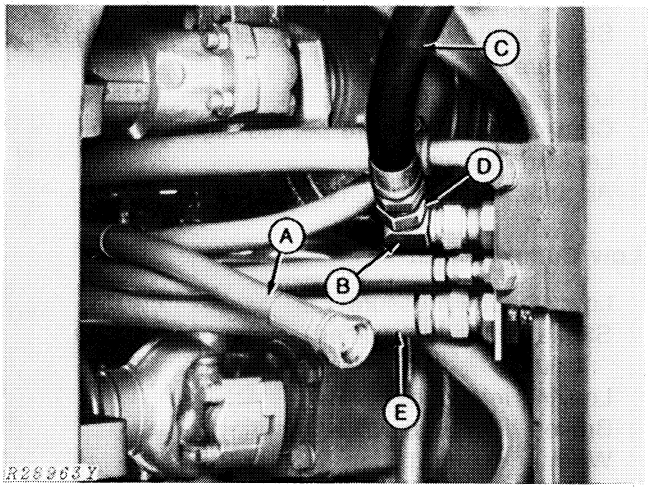

A—Pressure Control Valve Hose
B—0017 90° Elbow
C—Test Unit Inlet Hose
D—0092 Union
E—Pump Inlet Function Return Hose

Fig. 11-Main Pump Test Connections

Relieve hydraulic pressure and connect the hydraulic test unit as shown in Fig. 11.

Disconnect the function return hose (E, Fig. 11) at the rear hinge. Using a 0092 Union, connect the test unit outlet hose to the function return hose.

To prevent oil leaks, plug exposed fittings and lines with Caplugs.

Standby Pressure Check

Operate the engine at 2000 rpm and close the test unit control valve to restrict all flow. The pressure gauge in the test unit should read 2250 to 2300 psi (155 to 159 bar).

Check the pump stroke control valve "standby" pressure adjustment if the above specifications are not recorded.

Flow Check

With the test unit control valve open, run engine at 2000 rpm. Close test unit control valve until a 1500 psi (103.4 bar) reading is obtained at the junction block. Flow should be 28.5 gpm (107 L/m). Refer to 70-6-23 if specifications are not met.

REMOVAL

Relieve hydraulic pressure.

Drain radiator and oil cooler. Remove radiator, baffles, fan and fan shroud. Air conditioner condenser lines need not be disconnected. However the oil cooler-condenser must be removed from slide mounts on the radiator. Place heavy cardboard over oil cooler-condenser to protect from damage.

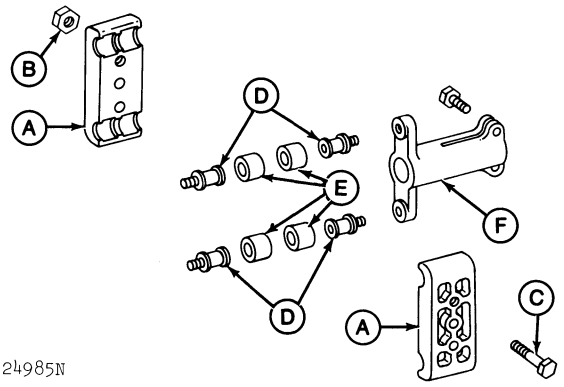

A—Coupler Half
B—Lock Nut
C—Cap Screw
D—Pump Drive Special Screws
E—Bushing
F—Pump Drive Shaft

Fig. 12-Exploded View of Pump Drive Assembly-8430 Tractor

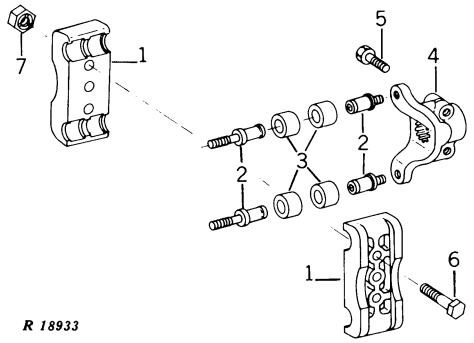

1—Coupler Half
2—Pump Drive Special Screw
3—Bushing
4—Pump Drive Shaft
5—Cap Screw
6—Cap Screw
7—Lock Nut

Fig. 13-Pump Drive Assembly-8630 Tractor

Disconnect main hydraulic pump inlet and outlet lines. Remove pump drive assembly (Fig. 12 or 13) and remove pump from tractor.

REPAIR

Disassemble pump only in a clean, well-lighted, isolated area. Use a pivoting D-01006AA (JDM-16) Bench Fixture or similar holding tool to hold pump for repairs.

Before removing pump shaft, remove piston plugs, pistons and springs. Place piston assemblies in JDH-21 Parts Tray so that they can be returned to the same bores from which they were removed.

Pump Shaft End Play

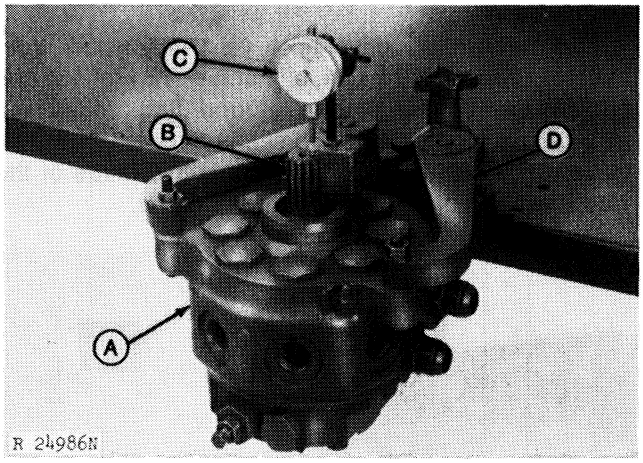

A—Pump Housing
B—Pump Shaft
C—Dial Indicator
D—Bench Holding Fixture

Fig. 14-Checking Pump Shaft End Play

Install a dial indicator on pump shaft (Fig. 14). Grasp pump shaft near housing with a pair of locking pliers. Using a screwdriver between the pliers and the housing, check pump shaft end play. End play should be 0.001 to 0.005 inches (0.03 to 0.12 mm). Excessive end play can be caused by bearing wear or an incorrect number or shims.

Pump Shaft Removal

Remove stroke control valve housing from pump.

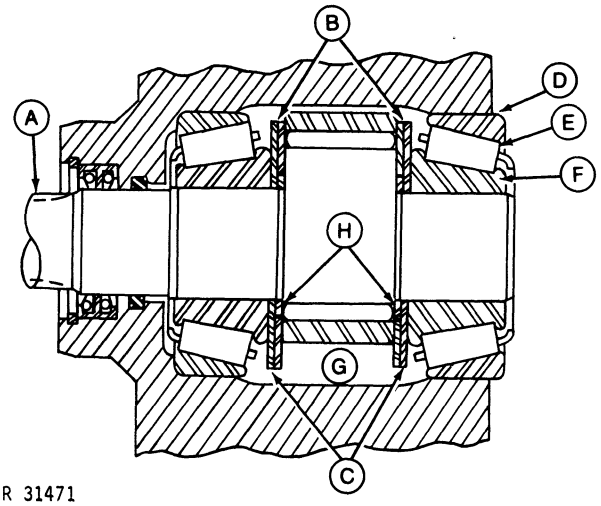

A—Pump Shaft
B—Thrust Washers
C—Thrust Washers
D—Bearing Cup
E—Place Shim Material Here
F—Bearing
G—Pump Crankcase
H—Thrust Washers

Fig. 15-Pump Shaft Removal

To remove pump shaft, tap lightly to loosen the outer bearing cup (D, Fig. 15). Insert a soft shim material between bearing cup (D) and cone (F) on the high cam side to slightly tip the shaft. More shims may be required. Carefully remove shaft.

Inspection

Housing and Shaft

Inspect housing for scored surfaces.

Inspect pump shaft, shaft bore, bearings, seal, and quad-ring packing. Wear or damage at these points could cause leakage.

Inspect needle bearings, race, and pump shaft cam for scoring or pitting.

Check thrust washers (B, C and H, Fig. 15). New thrust washer thickness is 0.0422 to 0.0452 inch (1.072 to 1.148 mm) for each of the six washers in the 4 cu. in. (66 mL) pump.

Inspection—Continued

Pistons

Check pistons and piston bores for scoring or pitting. Badly scored pistons could cause pistons to stick in bores. Piston O.D. is 0.9630 to 0.9634 inch (24.46 to 24.47 mm). Piston bore I.D. is 0.9637 to 0.9643 inch (24.48 to 24.49 mm).

Check piston springs for cracked or broken coils. The piston springs should compress to 1.78 inches at 47 to 53 lbs. (45.2 mm at 209.1 to 235.8 N). Springs MUST be matched to within 1.5 lbs. (6.7 N) of each other. Springs are replaced as a set. Be sure that color code is the same on all new springs in the set.

Discharge Valves

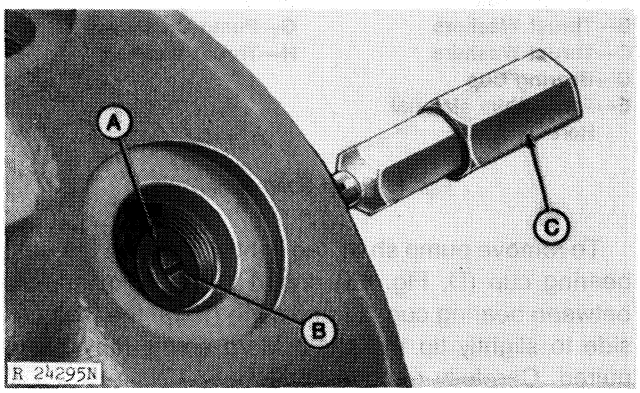

A—Housing **B—End of Puller** **C—JDH-40 Puller**

Fig. 16-Pulling Discharge Valve Seat

Check discharge valve stop, spring, guide, disk and seat. If NECESSARY, remove discharge valve seat with JDH-40 Seat Puller (C, Fig. 16). Be sure that puller catches between seat and housing. See Fig. 16.

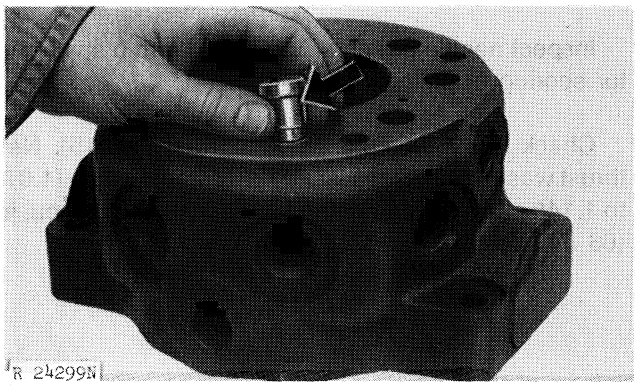

Fig. 17-Installing Discharge Valve Seat

To install seat, use JDH-39 Seat Driver (Fig. 17) and gently drive on seat shoulder until driver bottoms on finished face of discharge valve bore.

Inlet Valves

1. Inspect inlet valve assemblies in pump housing. DO NOT remove unless a broken retainer is evident or inlet valve assembly can be removed without use of a driver.

NOTE: If valve asssemblies can be removed by hand, bore in pump housing is enlarged. Housing must be replaced.

2. If necessary, drive inlet valve assembly from housing using a 3/8 x 6 in. cap screw (A, Fig. 18) and nut (B) (with driving edge ground flat). Insert nut through piston bore and cap screw through discharge valve guide. Thread cap screw only two-thirds of the way into the nut before using as a driver.

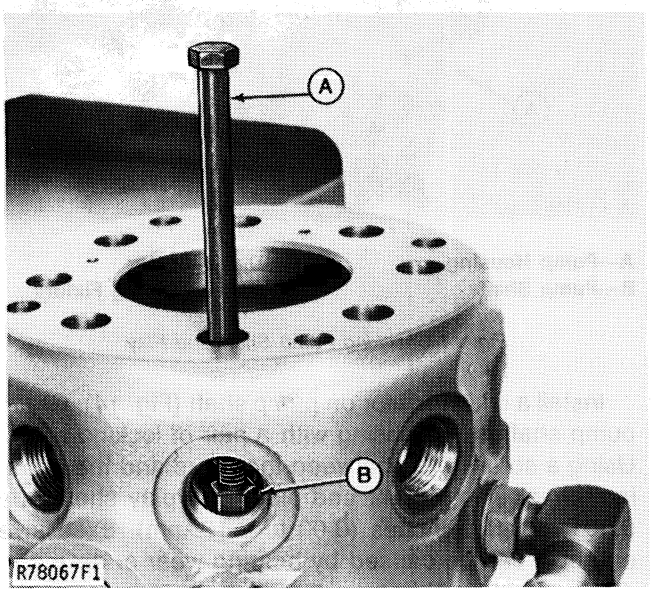

A—Cap Screw **B—Nut**

Fig. 18-Inlet Valve Removal

NOTE: If the preceding method for inlet valve removal is not used, the assembly will not be reliable for re-use.

3. Install new inlet valve assembly by tightening inlet valve plugs to 100 ft-lbs (136 Nm) (13.6 kgm) torque.

Stroke Control and Crankcase Outlet Valves

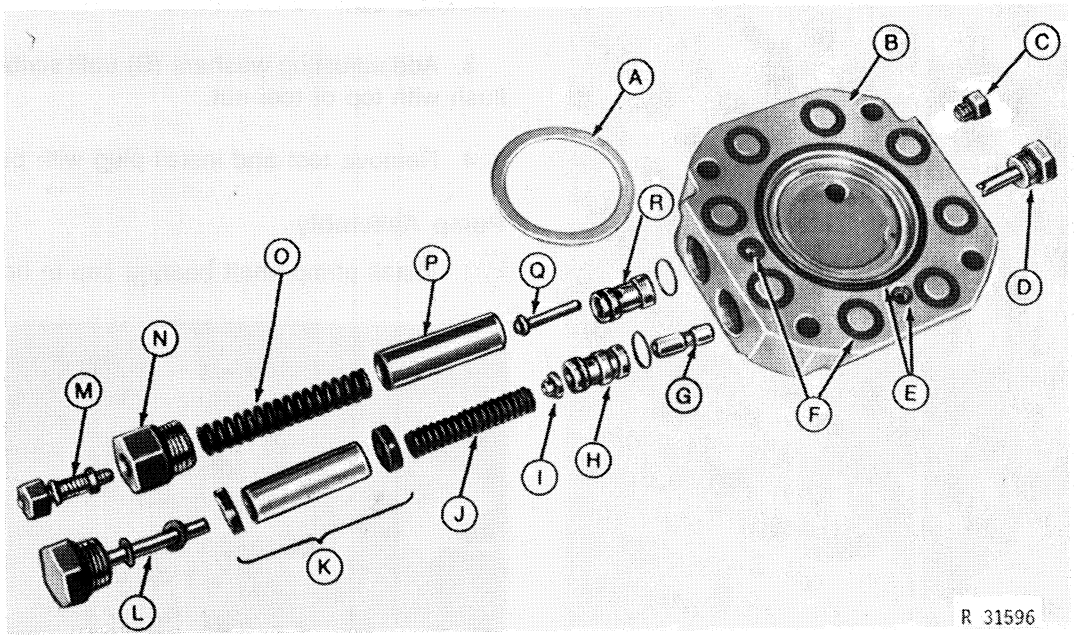

A—Shim
B—Stroke Control Valve Housing
C—Plug
D—Plug with Pin
E—O-Ring
F—Packing
G—Crankcase Outlet Valve
H—Outlet Valve Sleeve
I —Spring Guide
J —Outlet Valve Spring
K—Filter Screen and Packings
L —Plug with Washers
M—Adjusting Screw
N—Bushing Plug
O—Control Valve Spring
P—Spring Guide
Q—Stroke Control Valve
R—Control Valve Sleeve

Fig. 19-Stroke Control Valve Housing Assembly

1. Disassemble stroke control valve and crankcase outlet valve assemblies ONLY if there is evidence of malfunction.

2. Use care if valve sleeves (H and R, Fig. 19) are driven out. Use a driver that is recessed in the center and will only drive on the outer edge of the sleeve.

3. Inspect stroke control valve and crankcase valve assemblies for burrs, weak springs, eroded seats, leaking packings, or plugged crankcase filter screen (K).

a) Stroke control valve spring (O) working load should be 3.3 in. at 125 - 155 lbs. (84 mm at 556 - 689 N).

b) Crankcase outlet valve spring (J) working load should be 2.2 in. at 45 - 55 lbs. (56 mm at 200 - 245 N).

NOTE: Always install new O-rings, packings, and oil seals. Use kit available. Dip all parts in clean John Deere Hy-Gard Transmission and Hydraulic Oil prior to assembly.

Assembly and Adjustments

Stroke Control Valve Housing

1. Install stroke control valve and crankcase outlet valve assemblies in housing. Do not install crankcase outlet valve plug with pin (D, Fig. 19).

Assembly and Adjustments—Continued

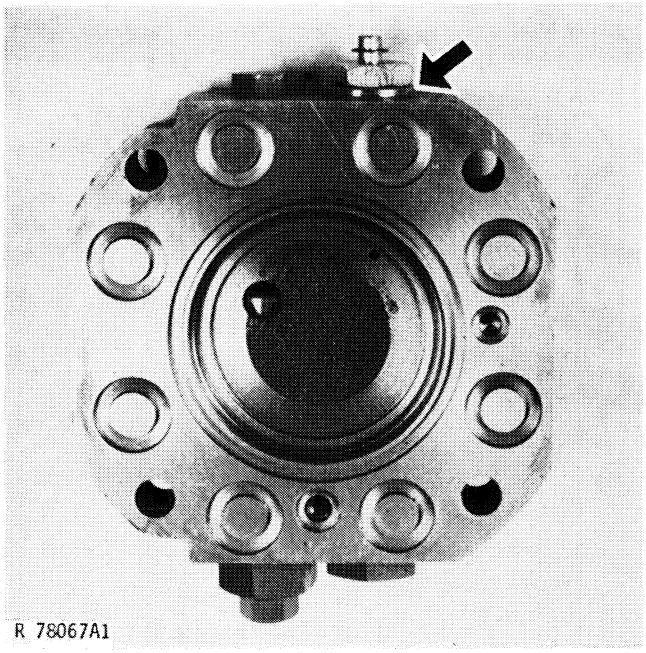

Fig. 20-JDH-19A Adjusting Screw in Stroke Control Valve Housing

2. Install JDH-19A Adjusting Tool (arrow) with 1/8 in. (3.2 mm) thick washer.

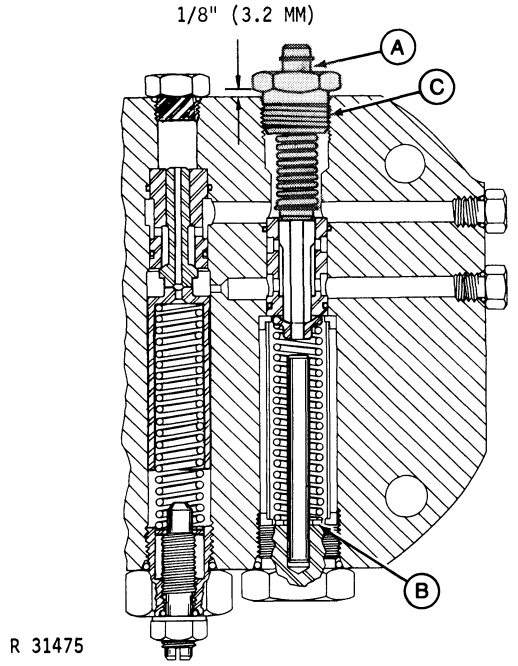

A—Scribe Line
B—Adjusting Washers
C—JDH-19 Crankcase Outlet Valve Adjusting Tool

Fig. 21-Adjusting Tool JDH-19

IMPORTANT: If JDH-19 Adjusting Tool (C, Fig. 21) is used, install tool to within 1/8 in. (3.2 mm) of housing. JDH-19 tool does not have a washer.

3. Add adjusting washers (B) until scribe line (A) is flush with top of tool nut.

4. Remove tool and install plug with pin.

Pump Assembly

1. Install pump shaft bearing cup in housing.

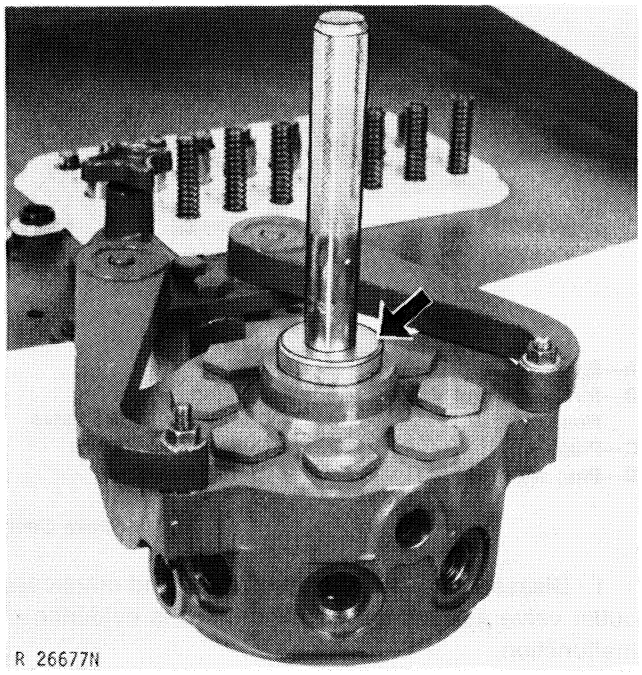

Fig. 22-Installing Seal Using OTC-814 Driver and JDH-18

2. Install backup ring and quad ring in pump housing. The backup ring should be installed closest to the pump shaft oil seal.

3. Install oil seal in pump housing using JDH-18 Seal Driver. Coat seal lips with SAE multi-purpose type grease. Install snap ring in groove. (See Fig. 22).

IMPORTANT: Do not position oil seal beyond snap ring groove. To do so restricts seal drain outlet, causing oil seal failure.

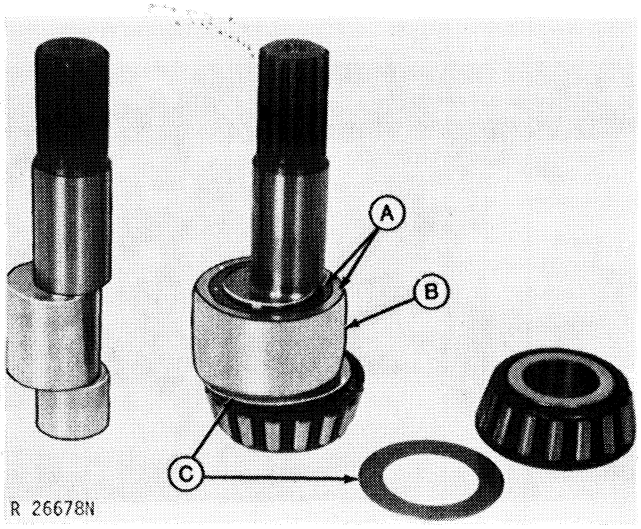

A—Spacers **B—Race** **C—Thrust Washer**

Fig. 23-Pump Shaft Assembly

4. Install the thrust washer (C, Fig. 23), spacers (A), and roller bearing over pump shaft.

**Note that the 4 cu. in. (66 mL) pump shaft has two extra spacers not used on smaller pumps. The smaller steel and brass spacers are installed toward the race (B).*

5. Place needle bearing race (B, Fig. 23) over shaft cam. Install needle bearings.

IMPORTANT: Use only John Deere Hy-Gard Transmission and Hydraulic Oil when installing needle bearings.

6. Install remaining spacers (19, 20, Fig. 24), thrust washer (18), and roller bearing (17).

7. Install pump shaft assembly in pump housing. Install race over bearing into housing.

8. Install discharge valve assemblies (15) into bores and place stroke control valve housing with packings, O-ring, and adjusting shims on pump housing. Torque cap screws to 85 ft-lbs (115 Nm) (11.5 kgm).

9. Check for proper pump shaft end play as instructed earlier in this group. Add or deduct shims as necessary to obtain correct end play.

10. Install piston (5-9) assemblies into housing. Be sure pistons are installed into bores from which they were removed.

11. Install new sheaths over O-ring on piston plugs and torque plugs to 100 ft-lbs (136 Nm) (14 kgm).

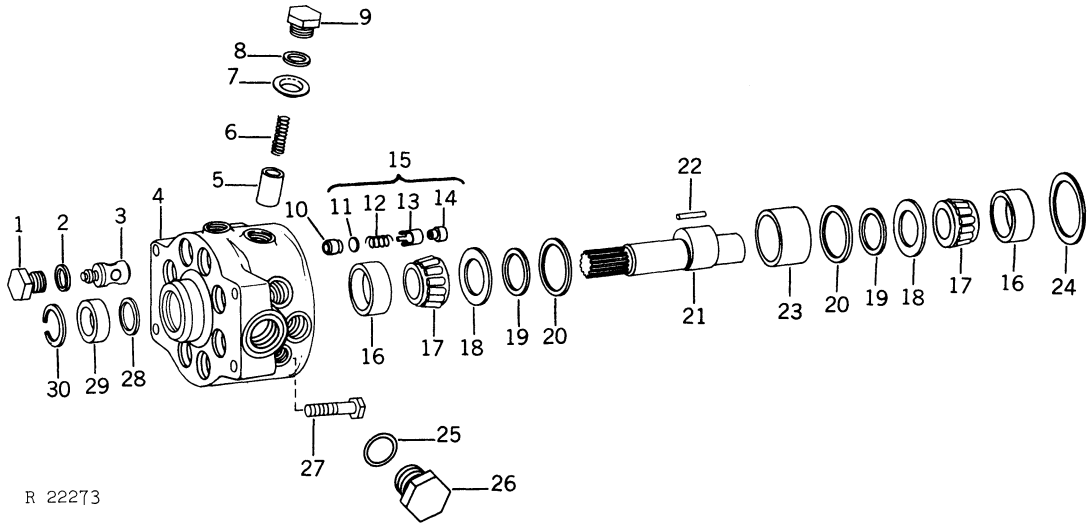

1—Plug (8 used)
2—O-Ring (8 used)
3—Inlet Valve (8 used)
4—Housing
5—Piston (8 used)
6—Spring (1 set)
7—Sheath (8 used)
8—O-Ring (8 used)
9—Plug (8 used)
10—Discharge Valve Seat (8 used)
11—Discharge Valve (8 used)
12—Spring (8 used)
13—Guide (8 used)
14—Stop (8 used)
15—Discharge Valve Assembly (8 used)
16—Bearing Cup (2 used)
17—Bearing Cone (2 used)
18—Spacer (2 used)
19—Spacer (2 used)
20—Thrust Washer (2 used)
21—Shaft
22—Roller Bearing (25 used)
23—Race
24—Shim
25—O-Ring
26—Plug
27—Cap Screw (4 used)
28—Quad Ring Packing
29—Oil Seal
30—Snap Ring

Fig. 24-Main Hydraulic Pump

Installation and Adjustment

1. Reverse the steps of Removal to install the hydraulic pump in the tractor.

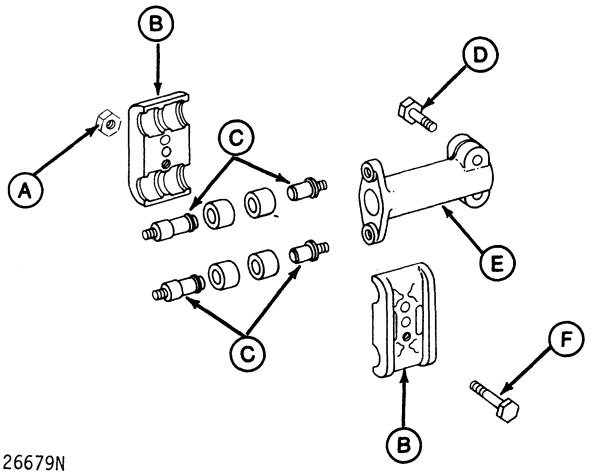

R 26679N

A—Lock Nut
B—Coupler Half
C—Special Screw
D—Cap Screw
E—Drive Shaft
F—Cap Screw

Fig. 25-Pump Drive Assembly

2. Refer to the following torque specifications when installing pump and pump drive assembly:

NOTE: Apply Locktite to special screws before assembly.

Location	Torque
Pump-to-pump support cap screws	85 ft-lbs (115 Nm) (11.5 kgm)
Coupler shaft cap screws	35 ft-lbs (47 Nm) (4.7 kgm)
Special pump drive screws*	35 ft-lbs (47 Nm) (4.7 kgm)
Coupler half cap screws	35 ft-lbs (47 Nm) (4.7 kgm)
Coupler half cap screw lock nuts	30 ft-lbs (41 Nm) (4.1 kgm)

3. Connect all hydraulic lines to correct locations. Be sure lines are tight.

4. Install oil cooler, radiator, and baffles. Connect oil cooler lines. Install remaining parts necessary to make tractor operational. Check hydraulic oil reservoir for proper level. Install pump seal drain line.

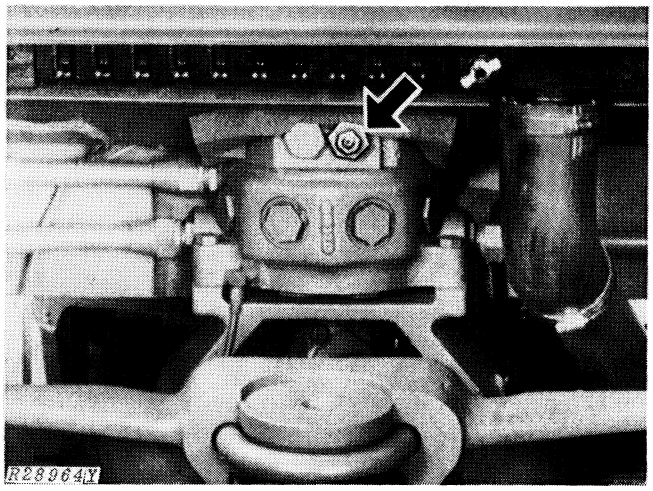

Fig. 26-Stroke Control Valve Adjusting Screw

5. Turn stroke control adjusting screw out to relieve spring pressure. See Fig. 26.

6. Install pressure gauge at O-ring port in junction block using fitting No. 0721, hose, and 0-5000 psi (0-350 bar) (0-350 kg/cm²) gauge.

7. Place all hydraulic controls in neutral and run engine at 2000 rpm.

8. Turn adjusting screw in until 2250-2300 psi (155-159 bar) (158-162 kg/cm²) is recorded on the pressure gauge.

9. Relieve hydraulic pressure and remove gauge.

Group 20
POWER STEERING

GENERAL INFORMATION

The steering system consists of a metering pump, steering valve, and steering and feedback cylinders.

There are no mechanical linkages between the three assemblies. Three hydraulic oil circuits, using steel tubing and hoses, transport oil between the three assemblies to provide control and power to the system. The three circuits are the control circuit, the pressure oil circuit, and the return oil circuit.

Metering Pump Assembly

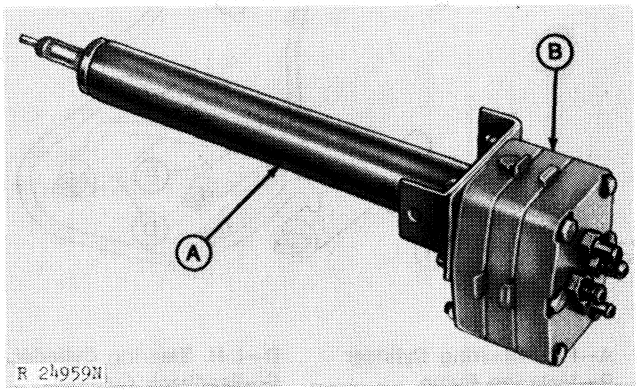

A—Steering Shaft Assembly **B—Metering Pump**

Fig. 1-Metering Pump (Early Model)

The metering pump is an external gear-type pump. It is mounted and splined to the end of the steering wheel shaft. The pump has three principle parts; base, body with gears, and cover. The body and gears are matched together to provide closely fitted parts. Four special fittings in the cover connect the pump to the control and return oil circuits.

Steering Valve Assembly

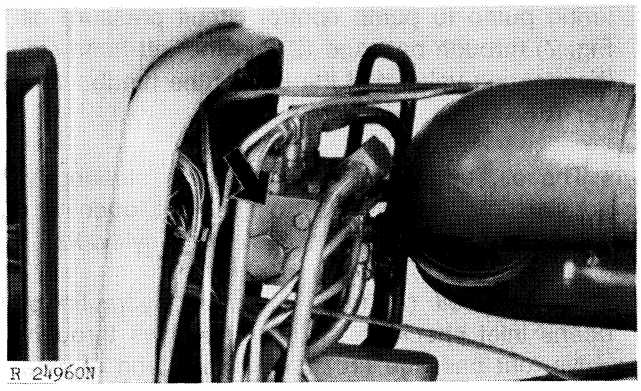

Fig. 2-Steering Valve

The steering valve is a spool-type valve matched with the housing to close tolerance. There are two check valves between the return oil circuit and the control circuit that provide make-up oil to the control circuit to replace oil "lost" in the control circuit during the steering operation.

Three filter screens in the control circuit and pressure oil circuit help maintain clean oil in the system.

Four relief valves, two in the control circuit and two in the pressure oil circuit protect the system from high pressure surges. An inlet check valve isolates steering pressure surges to the steering circuit.

Steering Cylinders

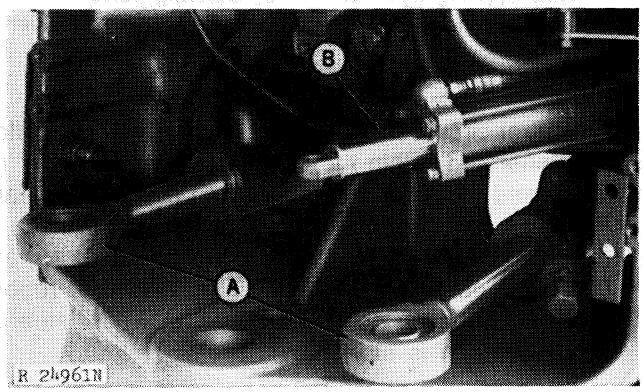

A—Steering Cylinders **B—Feedback Cylinder**

Fig. 3-Steering Cylinders

There are three double-acting cylinders in the hinge area. Two of the cylinders provide the physical force to make the turn. The third is the feedback cylinder. It is connected with the control circuit and moves with the other two during a turn.

Litho in U.S.A.

Control Circuit

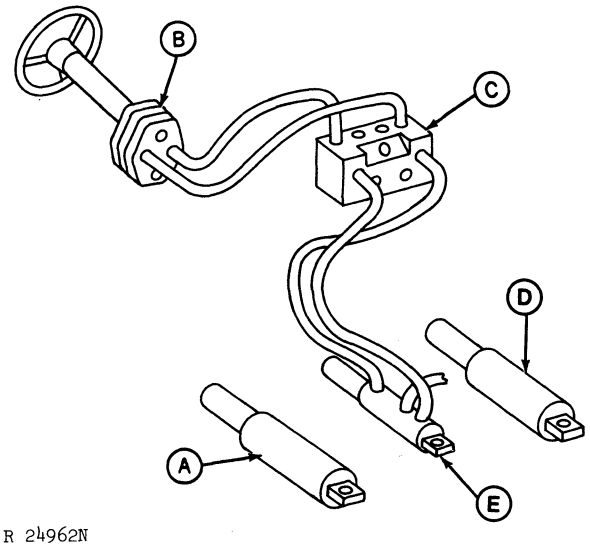

R 24962N

A—R.H. Steering Cylinder
B—Metering Pump
C—Steering Valve
D—L.H. Steering Cylinder
E—Feedback Cylinder

Fig. 4-Control Circuit

Control circuit oil is trapped oil. Pressure and flow are generated within the circuit by steering wheel rotation and meshing metering pump (B, Fig. 4) gears. Pressure and flow position the steering valve (C) to direct pressure oil to the steering cylinders (A and D). The feedback cylinder (E) supplies oil to reposition or neutralize the control valve when steering wheel rotation is stopped.

Pressure Oil Circuit

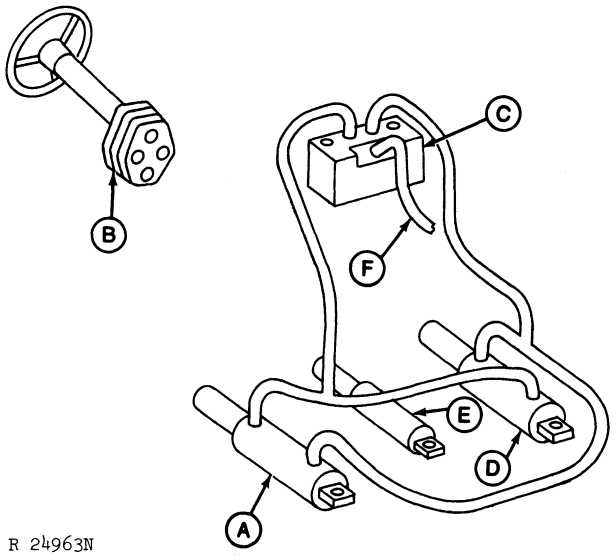

R 24963N

A—R.H. Steering Cylinder
B—Metering Pump
C—Steering Valve
D—L.H. Steering Cylinder
E—Feedback Cylinder
F—From Main Pump

Fig. 5-Pressure Oil Circuit

Pressure oil from the main hydraulic pump enters the steering valve and is directed to the steering cylinders to accomplish a right or left turn. Pressure circuit lines to the cylinders are alternate return oil lines as turning direction is reversed.

Return Oil Circuit

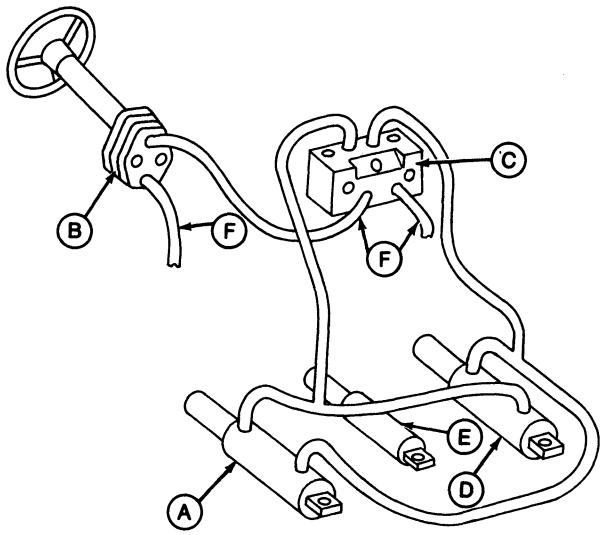

R 24964N

A—R.H. Steering Cylinder
B—Metering Pump
C—Steering Valve
D—L.H. Steering Cylinder
E—Feedback Cylinder
F—Return Oil

Fig. 6-Return Oil Circuit

Return oil (F, Fig. 6) from the steering cylinders flows through the steering valve where it is divided. Part of the return flow is directed to the metering pump to warm control circuit oil and the pump. The other part is routed directly into the main hydraulic pump inlet line to aid in charging the main pump.

Right Turn—Power

A right turn on the steering wheel actuates the metering pump to pump control circuit pressure oil (1, Fig. 7) through passage (27) to the left hand side of the steering valve and the end of the feedback cylinder (6).

The oil, through orifice (7) in the steering valve housing, moves valve (9) to the right, opening passages (10) and (11) to the steering cylinders.

Pressure oil (2) from the main hydraulic pump opens inlet check valve (19) and flows through the valve, out passage (10) to the head end of steering cylinder (13) and the rod end of steering cylinder (12). Cylinder (13) extends and cylinder (12) retracts to turn the tractor to the right.

1—Control Circuit
2—Pressure Oil Circuit
3—Return Oil Circuit
4—Metering Pump
5—Steering Valve Housing
6—Feedback Cylinder
7—Orifice
8—Orifice
9—Steering Valve
10—Passage
11—Passage
12—R.H. Steering Cylinder
13—L.H. Steering Cylinder
14—Return Oil Gallery
15—Drive Gear
16—Idler Gear
17—Metering Pump Return Line
18—Steering Valve Return Line
19—Inlet Check Valve
20—R.H. Make-Up Oil Check Valve
21—L.H. Make-Up Oil Check Valve
22—L.H. Control Circuit Relief Valve
23—R.H. Control Circuit Relief Valve
24—R.H. Pressure Circuit Relief Valve
25—L.H. Pressure Circuit Relief Valve
26—Return Oil Orifice
27—Metering Pump Control Circuit Port
28—Metering Pump Control Circuit Port

A—Pressure Oil
B—Low Pressure Oil
C—Pressure-Free Oil
D—Trapped Oil

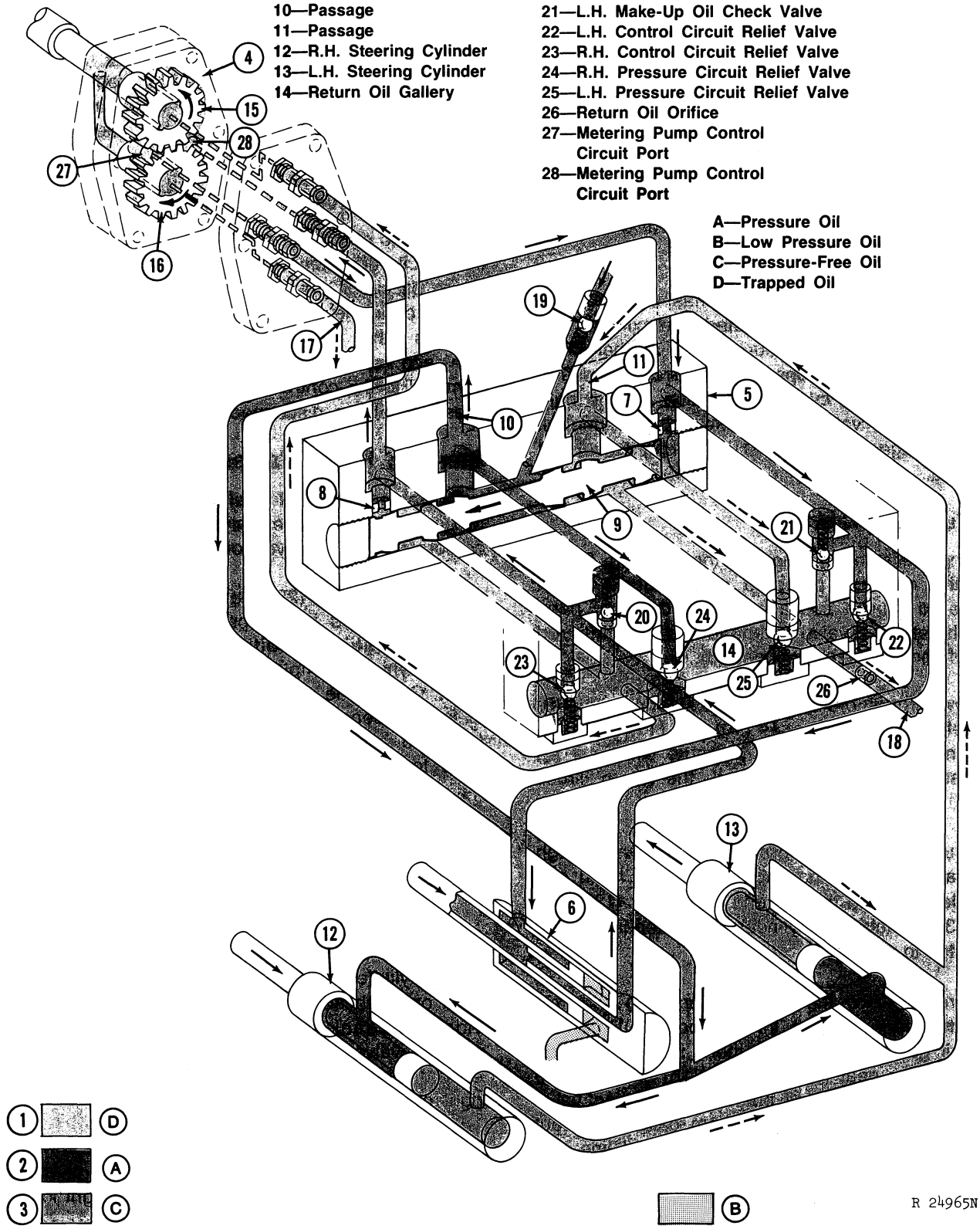

Fig. 7-Right Turn—Power

Oil (3, Fig. 7) in the head end of cylinder (12) and rod end of cylinder (13) returns to the steering valve through passage (11) into return oil gallery (14). At that point, the oil is divided with part flowing out port (18) to the inlet line between the oil pressure regulating valve housing and the main hydraulic pump. The other part is routed to the metering pump (4) through the center of gear (15) out the center of gear (16) and return line (17) to the top of the oil pressure regulating valve housing, joining main pump inlet flow.

Control circuit oil (1) in the inner rod cavity of the feedback cylinder (6) is forced out the head end of the cylinder as the cylinder retracts. This oil returns to the right hand end of the steering valve and the metering pump through passage (28).

When steering wheel rotation has stopped and provided the hinge has not rotated to maximum turn position, control circuit pressure on the left hand end of the steering valve drops. Control circuit pressure, caused by feedback cylinder retraction, on the right hand end of the valve moves the valve to neutral, closing passages (10) and (11). Steering movement is stopped.

Left Turn—Power

Turning the steering wheel to the left (Fig. 8) actuates the metering pump to pump control circuit pressure oil (1) out passage (28) to the right hand end of the steering valve and head end and inner rod cavity of the feedback cylinder (6).

Oil flow through orifice (8) moves steering valve (9) to the left, opening passages (10) and (11). Passage (11) is now aligned with the pressure oil circuit (2) and passage (10) is aligned with the return circuit (3).

Pressure oil (A) from the main pump flows through check valve (19), out passage (11) to the head end of cylinder (12) and the rod end of cylinder (13). Cylinder (13) retracts and cylinder (12) extends, turning the tractor to the left.

Oil forced out by the two cylinders (12) and (13) enters the steering valve through port (10) into the return oil gallery (14). From there it flows through metering pump gear (15) out gear (16) and passage (17) to the top of the oil pressure regulating valve housing. Return oil also flows from gallery (14) out port (18) to the main hydraulic pump inlet line.

Control circuit flow from the rod end of the feedback cylinder (6) is forced through the valve housing and into passage (A) of the metering pump.

Stopping steering wheel rotation, providing that the hinge has not rotated to maximum turn position, reduces control circuit pressure on the right hand end of the valve (9). Control circuit pressure on the left hand end of the valve (9), caused by feedback cylinder extension, moves the valve to neutral, closing passages (10) and (11) and stopping steering movement.

Steering Valve Make-Up Valves

Hydraulic oil could be "lost" from the trapped control circuit during the steering operation, in this event, return oil circuit pressure is slightly higher than returning oil in the control circuit. This higher pressure unseats either valve (20) or (21), depending on the turn, and replaces the "lost" oil. These valves also admit oil to the control circuit (1) for initial fill or after lines have been disconnected.

Steering Relief Valves

Two pressure circuit relief valves (24) and (25) and two control circuit relief valves (22) and (23) are incorporated in the valve housing.

Valves (24) and (25) prevent high pressures from being generated in the pressure circuit under adverse operating conditions (a force against the wheels which attempts to make a turn against pressure). One of the valves (depending on the direction of force) opens and dumps to the return oil gallery (14) and allows the cylinder that experiences the force to retract.

Valves (22) or (23) also dump to the return gallery (14) to prevent high pressure build-up in the control circuit when either cylinder (12) or (13) collapses under an outside force.

Steering Feedback Cylinder

The cylinder is designed so that there is an equal area on each side of the cylinder piston. This provides an equal volume of oil to each side of the steering valve so that the same number of turns in each direction on the steering wheel will make a full right or full left-hand turn.

A third area, created by this design, is filled with oil from the clutch filter relief valve housing at charge pressure. This oil acts as a cushion or slight load to keep the cylinder tight.

1—Control Circuit
2—Pressure Oil Circuit
3—Return Oil Circuit
4—Metering Pump
5—Steering Valve Housing
6—Feedback Cylinder
7—Orifice
8—Orifice
9—Steering Valve
10—Passage
11—Passage
12—R.H. Steering Cylinder
13—L.H. Steering Cylinder
14—Return Oil Gallery
15—Drive Gear
16—Idler Gear
17—Metering Pump Return Line
18—Steering Valve Return Line
19—Inlet Check Valve
20—R.H. Make-Up Oil Check Valve
21—L.H. Make-Up Oil Check Valve
22—L.H. Control Circuit Relief Valve
23—R.H. Control Circuit Relief Valve
24—R.H. Pressure Circuit Relief Valve
25—L.H. Pressure Circuit Relief Valve
26—Return Oil Orifice
27—Metering Pump Control Circuit Port
28—Metering Pump Control Circuit Port

A—Pressure Oil
B—Low Pressure Oil
C—Pressure-Free Oil
D—Trapped Oil

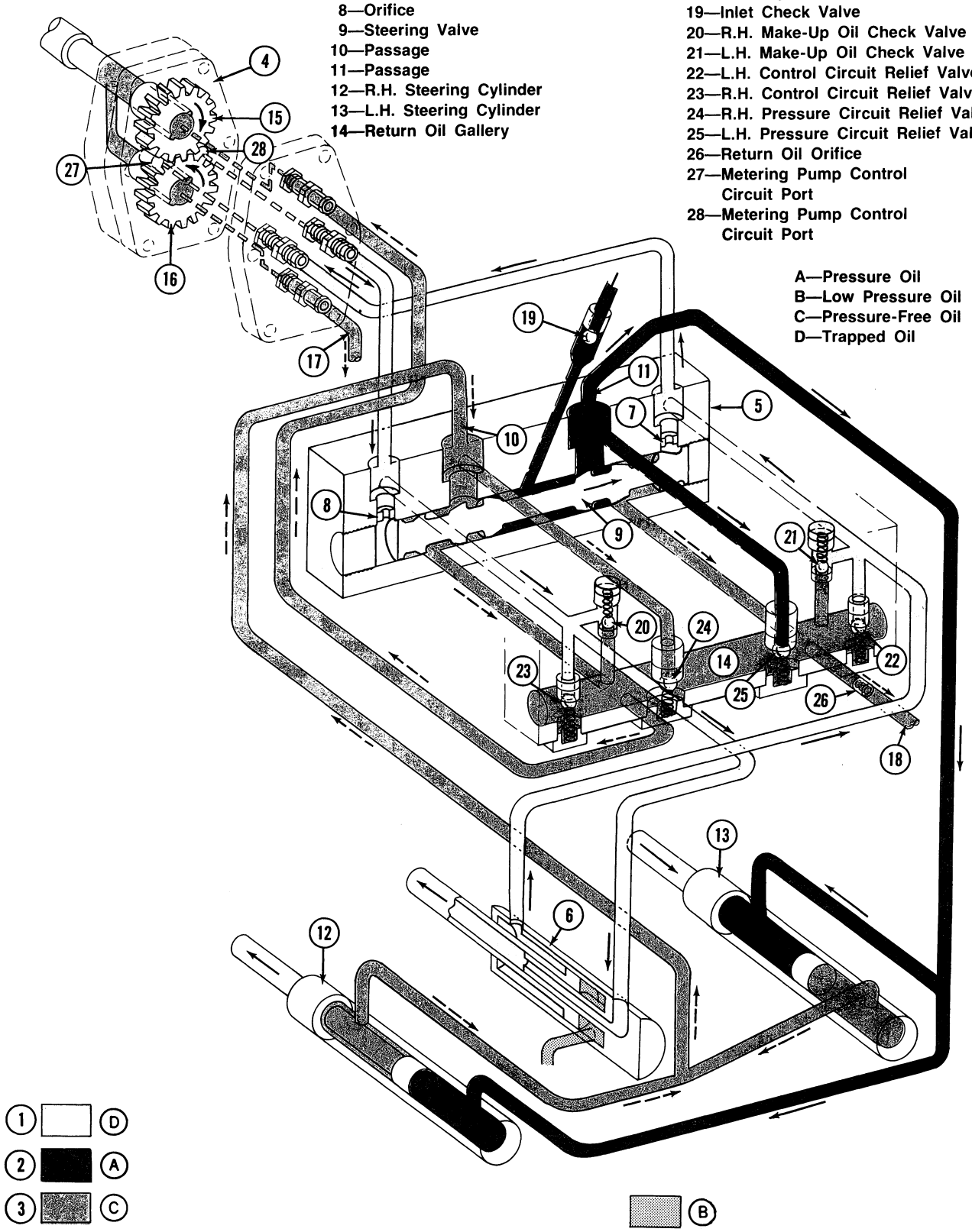

R 24966N

Fig. 8-Left Turn—Power

DIAGNOSING MALFUNCTIONS

Slow Steering Response or Hard Steering

Internal leakage in metering pump
Cold control circuit oil due to lack of return oil circulation through metering pump
Steering valve filters plugged or damaged
Steering valve feedback orifices plugged, erroded, or damaged
Steering valve scored or damaged
Steering cylinder piston scored
Feedback cylinder leakage
Low hydraulic system pressure

No Steering Feel

Metering pump friction spring failure

Oil Leakage in Control Support or Out Steering Column

Metering pump oil seal failure
Metering pump shims torn, wrinkled or folded

Internal Metering Pump Leakage

Shims torn, wrinkled or folded
Pump gears, body, base or cover worn or damaged

Steering Wheel Creeps (requires constant steering to maintain straight travel)—

Make-up valve and springs damaged
Incorrect make-up valve springs
Metering pump shims torn, wrinkled or folded
Feedback cylinder packings damaged

Hinge Lock to One Side

Steering valve scored or damaged

Steering Wheel May Be Turned with Hinge in Lock Position

Metering pump leakage
Steering valve make-up oil valves or seats failure
Control circuit relief valves or seats failure

Hinge "Twitch" on Start Up

Feedback cylinder packings failure
Air in steering system
Steering wheel turned and valve moved while engine was off

"Jerky" Steering

Air in steering system
Control circuit filter screens with orifices incorrectly installed

Litho in U.S.A.

IMPORTANT: Perform all service repairs on the metering pump, steering valve and steering cylinders in a clean, isolated work area, preferably a separate well-lighted room. Use extreme care to keep work benches, tools, and test equipment clean. Use the proper tools, cleaning material, and lubricants.

METERING PUMP AND STEERING SHAFT ASSEMBLY

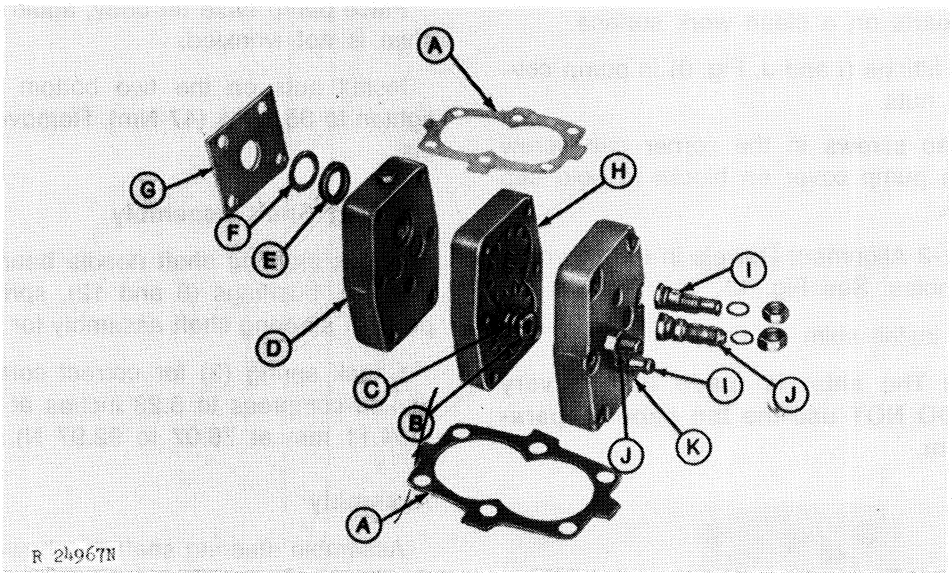

A—0.0005 in. (0.0127 mm) Shims
B—Friction Plate (2 used)
C—Friction Spring
D—Pump Base
E—Oil Seal
F—Washer
G—Plate
H—Pump Body with Gears
I—Special Fitting (2 used)*
J—Special Fittings (2 used)
K—Pump Cover
***—Early Model**
8430 (-T6171)
8630 (-T8463)

Fig. 9-Metering Pump Assembly

Removal and Disassembly

Remove battery ground cables.

Remove steering wheel with JDG-17 Puller. Remove cowls and cowl rear cover.

Relieve hydraulic pressure. Disconnect hydraulic lines from pump cover.

Remove steering wheel shaft and metering pump from control support. Steering units can be removed without removing the instrument panel.

Prior to disassembly, check pump for signs of external leakage at oil seal in pump base, between base, body and cover, and around special fittings.

Secure metering pump and carefully remove pump cap screws.

NOTE: Friction spring and plates in pump idler gear and lower steering shaft spring are compressed. Gradually loosen all six pump cap screws in a sequence. Remove top and middle cap screws first, then remove bottom cap screws.

Inspection

Check pump oil seal (E, Fig. 9) for leakage or damage.

Examine base (D), body (H), gears and cover (K) for wear, scoring, or damage. Malfunctions could be caused by an improperly installed shim (A), contaminated hydraulic oil, or excessive leakage.

NOTE: Pump body and gears (H) are a matched assembly and must be replaced as a unit.

Check 0.0005-inch (0.0127 mm) shims (A) for damage or improper installation that could cause wear, leakage, or damage. Shims should always be replaced with new shims whenever pump is disassembled.

Check friction spring (C) for damage or improper compression. Spring should compress to 0.77-inch at 81 to 99 lbs. (19.5 mm at 360 to 440 N).

Special fittings (I) are threaded on later model tractors.

Assembly

Use new O-rings, oil seals, and shims. Clean, dry with compressed air and dip parts in clean John Deere Hy-Gard Transmission and Hydraulic Oil just prior to assembly. Use special care to keep all parts dirt-free.

Place pump parts on a clean work surface.

Install special fittings (I and J, Fig. 9) in pump cover. Tighten jam nuts.

Install four cap screws in the corner cap screw holes and place pump cover on blocks to hold cap screws in place.

Insert JDH-42-2 Alignment Dowels in the two center cap screw holes. See Fig. 11.

CAREFULLY install shim on cover.

IMPORTANT: The shim is made of a silvery film material. DO NOT use the tan paper separator for the shim.

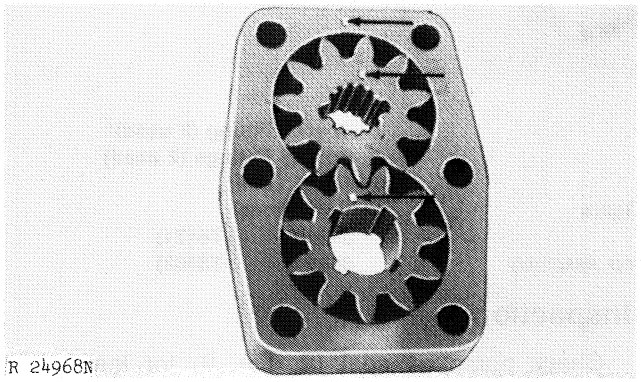

Fig. 10-Gear and Body Identification Marks

Place pump base on body, again making sure that shim is not wrinkled.

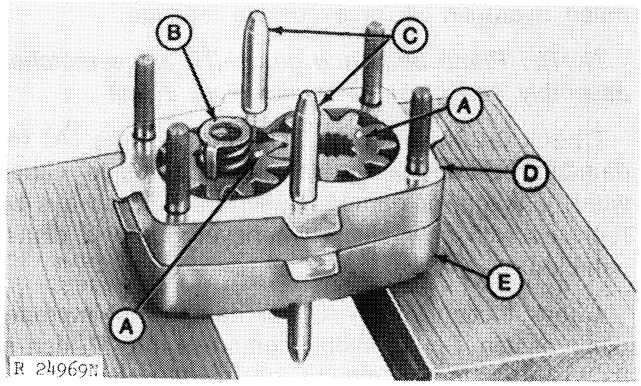

A—Identification Marks
B—Friction Plate
C—Alignment Dowels
D—Shim
E—Pump Cover

Fig. 11-Pump Gears and Body Assembly

Install pump gears in body. Gear identification marks should be up. The idler gear is in the bottom bore, in line with the special return oil fitting.

Install friction plates and spring in idler gear.

CAREFULLY install second shim on pump body.

Place pump base on body, again making sure that shim is not wrinkled.

Install nuts on the two bottom cap screws and tighten to 35 ft-lbs (47 Nm). Remove alignment dowels.

Steering Shaft Assembly

Check steering shaft needle bearings (2, Figs. 12 and 13), bushings (6 and 12), spring (3) and other parts of steering shaft assembly for wear or damage.

Check spring (3) for correct compression. Spring should compress to 5.28 inches at 17.1 to 20.9 lbs. (134.11 mm at 76.07 to 92.97 N).

Assembly

Assemble steering shaft as shown in Figs. 12 and 13. Use legend below Fig. 13 for both illustrations. Note changes that have been made on later models.

Install oil seal (21, Fig. 12 and 13) into tube (13) with lip of seal outward.

NOTE: On later models, tube (13) and pump support (17) are a one-piece assembly.

Install washer (7A), retaining rings (5), bushing (6), washer (4), spring (3) and needle bearing assembly (1 and 2) over lower shaft (8).

Place plate (G, Fig. 9), washer (F), and oil seal (E) over pump end of lower shaft and install shaft into metering pump. Oil seal (E) should be installed with lip of seal toward the pump.

Press oil seal into pump base with fingers. Install remaining two cap screws in metering pump. Assemble coupling (9, Figs. 12 and 13), needle bearing assembly (1 and 2), release rod (10) and upper shaft (11) into tube. Install tube on pump. Tighten nuts to 35 ft-lbs (47 Nm).

Shaft and gears should rotate freely by hand.

Secure metering pump assembly in control support and attach hydraulic lines. On clamped hoses, cut 1/2-inch (12.7 mm) from end of hoses and install on fittings. Be sure that the metering pump-to-pressure regulating valve housing hose is connected to the fitting at the bottom of the pump cover.

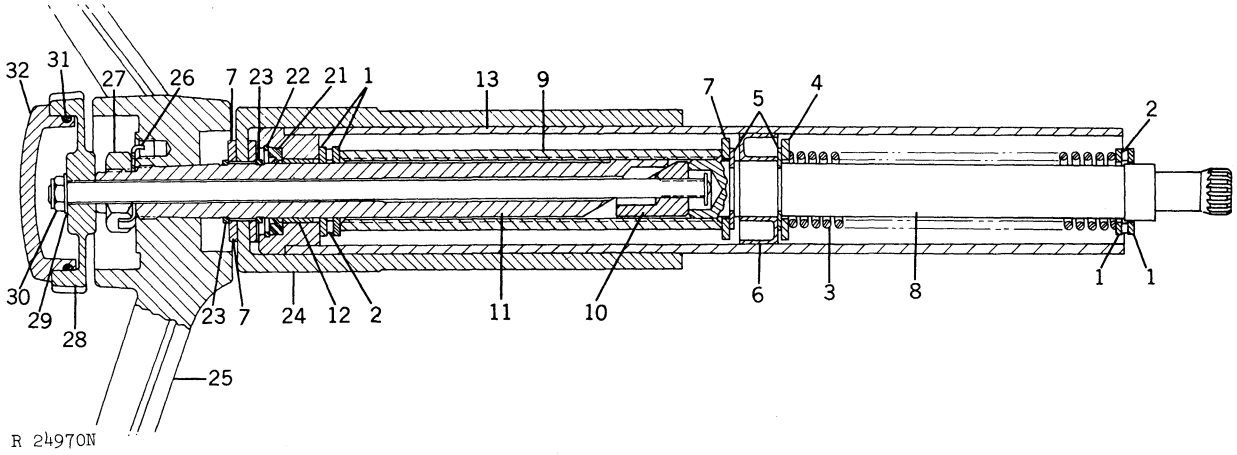

Fig. 12-Cut-Away of Steering Shaft Assembly (See Fig. 13, Legend)

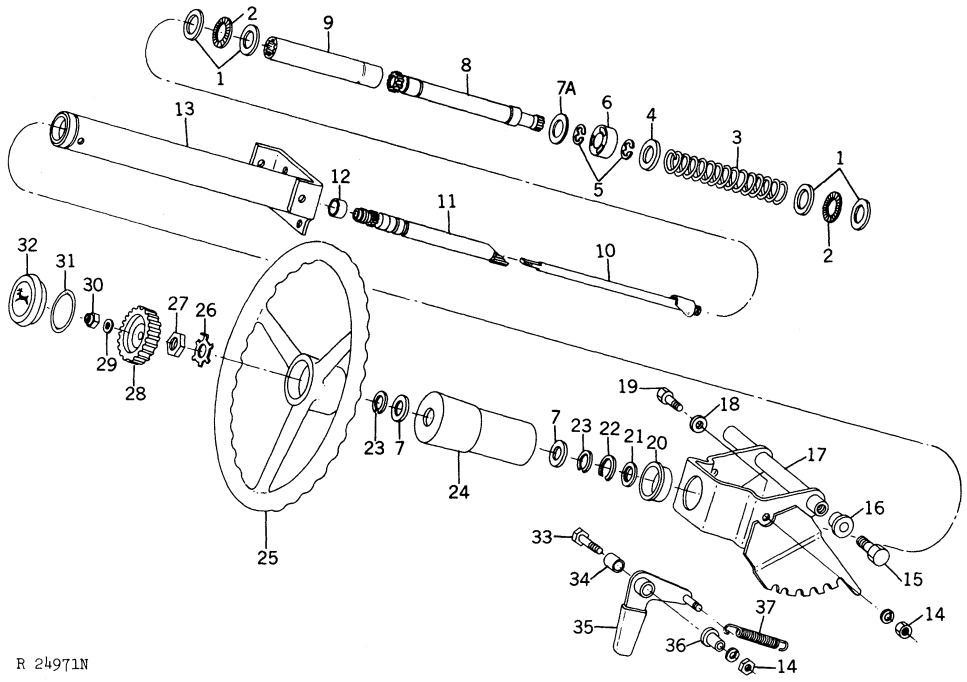

1—Thrust Race**
Thrust Washer***
2—Needle Bearing (2 used)
3—Spring
4—Washer
5—Retaining Ring (2 used)
6—Bushing
7A—Washer*
7—Washer (2 used)
8—Lower Shaft
9—Coupling
10—Release Rod
11—Upper Shaft**
Upper Shaft***
12—Bushing
13—Tube
14—Nut (2 used)
15—Cap Screw (2 used)
16—Bushing (2 used)
17—Pump Support
18—Washer
19—Cap Screw (2 used)
20—Collar
21—Oil Seal
22—Snap Ring*
23—Snap Ring**
Retaining Ring* (2 used)**
24—Sleeve
25—Steering Wheel
26—Lock Washer
27—Nut
28—Knob
29—Lock Washer
30—Nut
31—O-Ring
32—Emblem
33—Cap Screw
34—Bushing
35—Adjusting Lever
36—Spacer
37—Spring
***—Early Model Only**
****—Early Model**
*****—Later Model**

Fig. 13-Steering Shaft Assembly

⚠ CAUTION: Be sure that everyone is clear of the tractor and attached implements. Slight steering movement could suddenly and rapidly occur whenever engine is started. Have a secure hand hold, as the following is not necessarily a smooth or slow operation.

Start engine and cycle steering several times to bleed air from system. Continue until smooth operation, lock-to-lock, is obtained.

STEERING VALVE

Removal

1. Relieve hydraulic system pressure.

2. Disconnect battery ground cables.

3. Remove tractor hood and parts to gain access to the steering valve assembly.

4. If necessary, clean area around steering valve.

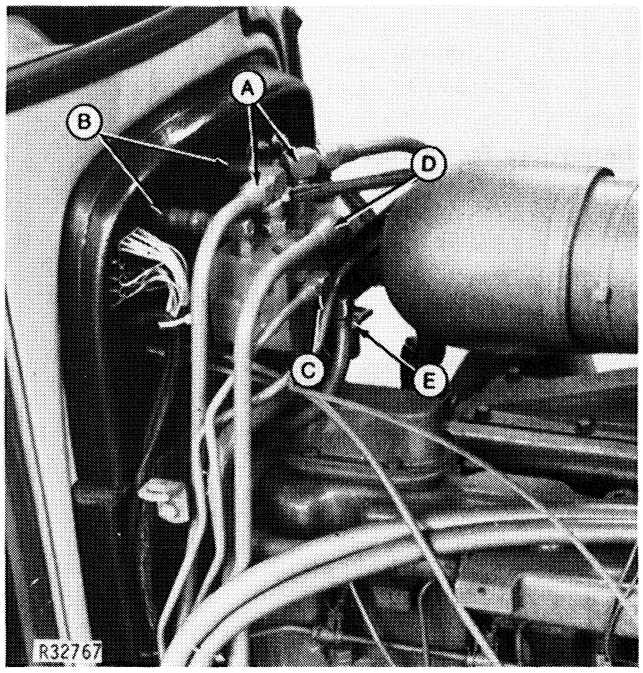

A—Pressure Circuit
B—Control Circuit From Metering Pump
C—Control Circuit To Steering Cylinders
D—Pressure Inlet
E—Return Circuit Outlet

Fig. 14-Steering Valve Removal

5. Disconnect hydraulic lines and immediately cap and plug all lines and fittings. Identify lines for aid in reassembly.

Steering Relief Valve Checks

NOTE: The following relief valve checks may be made with the steering valve on or off the tractor.

Control Circuit Relief Valves

IMPORTANT: The steering valve requires the same care as the metering pump when testing and repairs are performed.

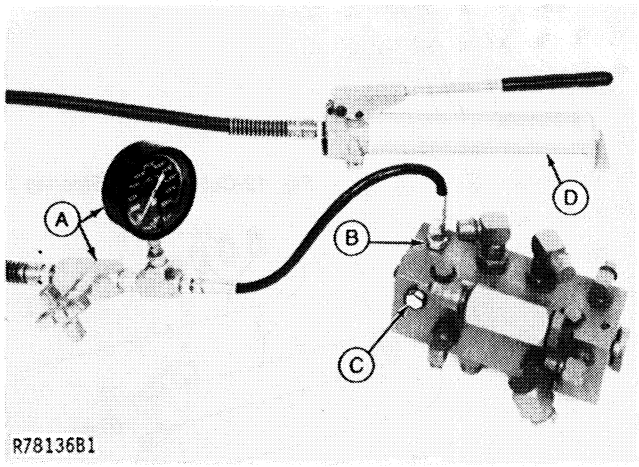

A—JDH-43 Thermal Relief Valve Test Kit
B—Connector No. 0013
C—Plug No. 6671
D—Hand Pump

Fig. 15-Control Circuit Relief Valve Test

1. Remove top right-hand control circuit inlet elbow with filter and orifice, and install connector No. 0013 (B, Fig. 15) from the Universal Pressure Test Kit. Place plug (C) No. 6671 in the control circuit outlet port.

2. Connect JDH-43 Thermal Relief Valve Test Kit and hand pump to fitting previously installed.

3. Acurate hand pump and note cracking pressure. Valve should relieve at 1500 to 1800 psi (103.4 to 124.1 bar) (105.5 to 126.5 kg/cm^2), then decrease rapidly, indicating the valve has opened.

4. If valve does not meet specifications, add or deduct shims to obtain correct reading.

NOTE: If cracking pressure is 500 psi (34.5 bar) (35.2 kg/cm²) less than specification, check spring tension before adding shims. (See Page 70-20-12.)

5. Relieve pressure and install test unit and plug in top left control circuit port. Plug front left control circuit port and perform above test; results should be within the same range.

Pressure Circuit Relief Valves

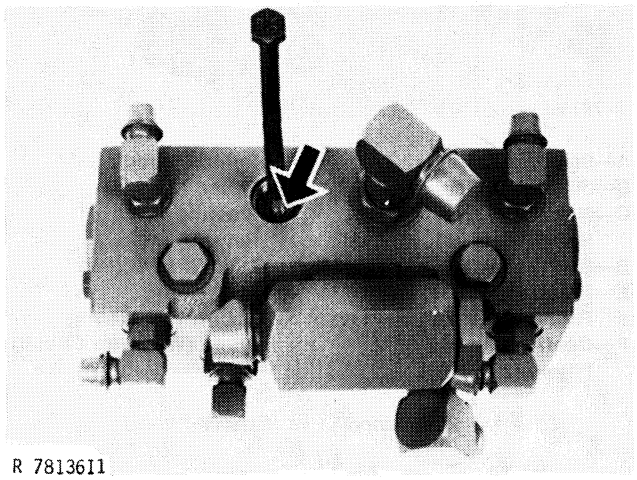

Fig. 16-JDH-46 Steering Test Plug Installation

1. Remove top right-hand pressure circuit outlet elbow and install JDH-46 Steering Valve Test Plug. (Gently tap test plug to seat in place.)

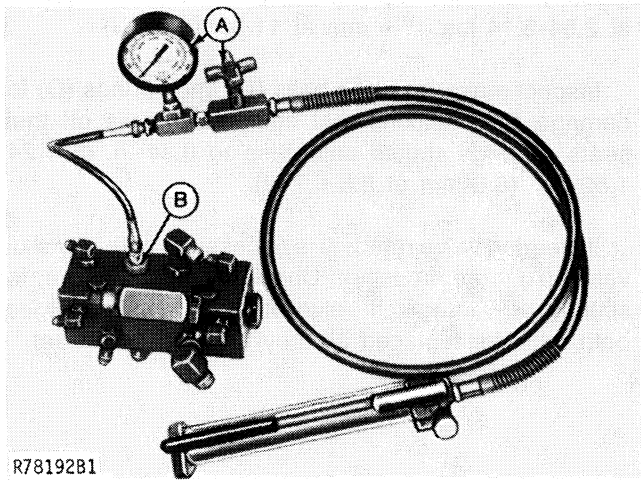

A—JDH-43 Thermal Relief Valve Test Kit **B—Connector No. 0753**

Fig. 17-Pressure Oil Circuit Relief Valve Test

2. After JDH-46 Test Plug is installed, install connector No. 0753 from Universal Pressure Test Kit into steering valve housing.

3. Install JDH-43 Test Kit and hand-pump to fitting. Apply pressure with hand-pump.

4. Gauge pressure reading should reach 4250 to 4750 psi (293.04 to 327.5 bar) (298 to 333.9 kg/cm²), then decrease rapidly, indicating that the valve has opened. If valve does not meet specifications, add or deduct shims as necessary.

NOTE: If cracking pressure is 1000 psi (69 bar) (70.3 kg/cm²) less than specification, check spring tension before adding shims. (See Page 70-20-12.)

5. After relieving pressure, perform same test on the left-hand pressure circuit relief valve. Test results should be within the same range.

NOTE: JDH-46 Steering Test Plug can be easily removed with a 5/16 x 3-1/2 inch cap screw. (See Fig. 16.)

IMPORTANT: Identify relief valve assemblies for reinstallation into the bores from which they were removed.

Disassembly and Inspection

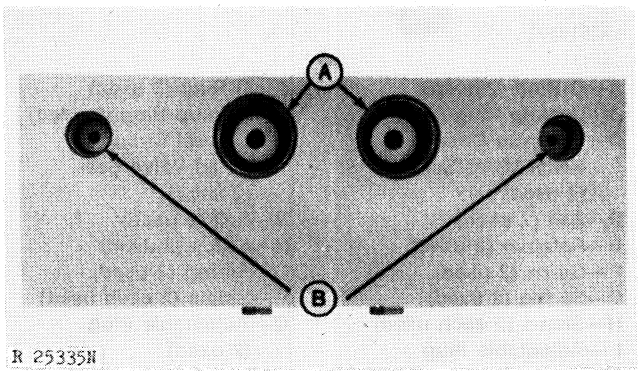

A—Pressure Circuit Relief Valve Seats **B—Control Circuit Relief Valve Seats**

Fig. 18-Relief Valve Seats

Inspect relief valve seats (A, B, Fig. 18 and C, L, Fig. 18), O-rings and backup rings for damage. Seats may be replaced if necessary. Use a small hook to pull seat from housing.

STEERING VALVE—Continued

Relief Valve—Continued

Disassembly and Inspection—Continued

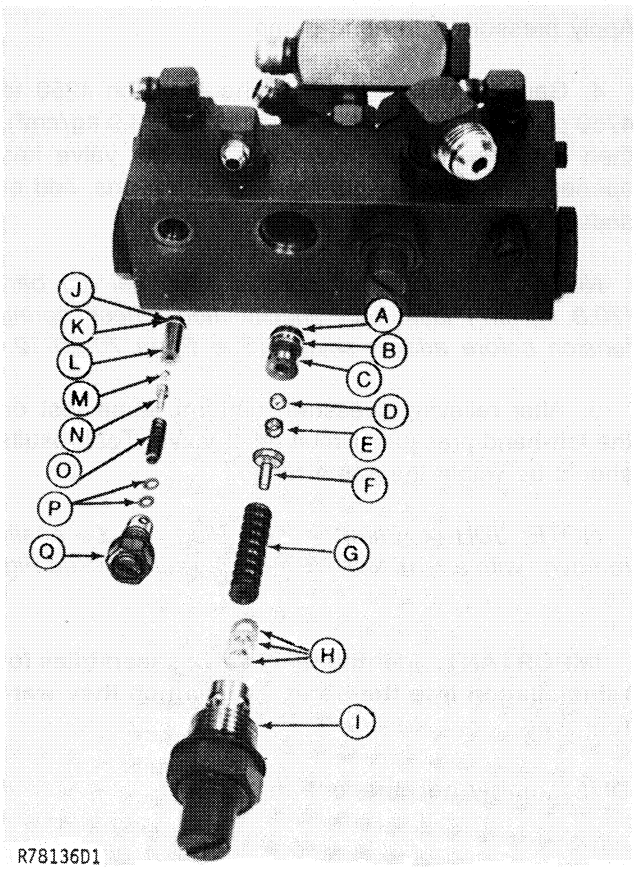

A—O-Ring (2 used)
B—Backup Ring (2 used)
C—Pressure Circuit Relief Valve Seat (2 used)
D—Ball (2 used)
E—Retainer (2 used)
F—Guide (2 used)
G—Spring (2 used)
H—Shims (2 each used)
I —Adjustable Plug (2 used)
J —O-Ring (2 used)
K—Backup Ring (2 used)
L—Control Circuit Relief Valve Seat (2 used)
M—Ball (2 used)
N—Guide (2 used)
O—Spring (2 used)
P—Shims (2 each used)
Q—Adjustable Plug (2 used)

Fig. 19-Relief Valve Assemblies

Control circuit relief valve springs (O, Fig. 19) should compress to 0.64 in. at 26.5 - 33.5 lbs. (16.2 mm at 117.8-149.0 N).

Pressure circuit relief valve springs (G) should compress to 1.85 in. at 219.6-268.4 lbs. (46.9 mm at 976.8-1193.8 N).

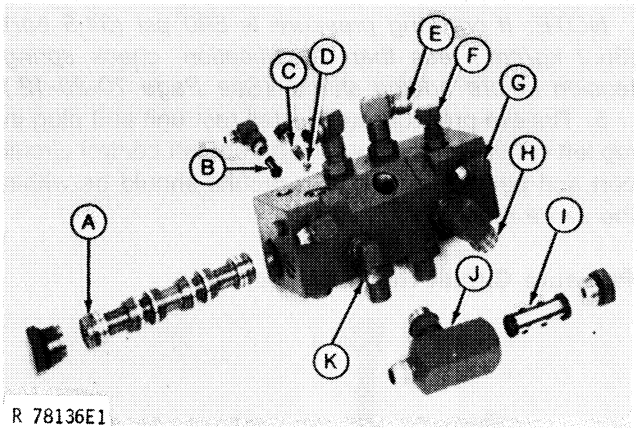

A—Steering Valve
B—Filtered Orifice
C—Make-up Valve Spring (2 used)
D—Ball (2 used)
E—Pressure Circuit Fitting (2 used)
F—Control Circuit Fitting (2 used)
G—Control Circuit Fitting (2 used)
H—Steering Valve Return
I —Inlet Filter Screen
J —Inlet Fitting
K—Return to Metering Pump (Warm-up Circuit)

Fig. 20-Steering Valve (Exploded View)

Examine pressure inlet filter (I, Fig. 20) and control circuit filter orifices (B) for plugged or damaged condition. Replace if filter screens or orifices are damaged. Use care in cleaning screens if plugged.

Examine inlet check valve ball, spring, and spring guide for damage. Spring should compress to 0.30 in. at 2.54-3.14 lbs. (7.6 mm at 11.30-13.97 N).

Inspect make-up valve balls (D) and springs (C) for damage or conditions that could hold balls off their seats. Springs should compress to 0.34 in. at 1.24-1.52 lbs. (8.6 mm at 5.5-6.7 N).

If steering valve removal is necessary, carefully slide valve (A) from housing. Check valve and bore for scoring or damage. If valve or housing is damaged, both must be replaced as they are a matched set.

STEERING VALVE—Continued

Assembly

1. Replace all O-rings and backup rings. Dip all parts in John Deere Hy-Gard Transmission and Hydraulic Oil prior to assembly.

2. Carefully slide valve (A, Fig. 20) into housing. Gently rotate valve to aid installation. Install valve plugs.

3. Install inlet check valve spring guide, spring, and ball. Install filter (I) into pressure inlet tee and install tee into housing.

4. Install filtered orifices (B), and fittings into control circuit ports.

5. Install make-up valve assemblies (C, D).

6. Install control circuit and pressure oil circuit relief valve assemblies into bores from which they were removed. O-ringed end of seat is installed into housing. Carefully push until it bottoms.

NOTE: If relief valve assemblies are not reinstalled in the same bores, valves should be retested and adjusted. Be sure that the same number of shims are installed unless diagnosis and valve checks indicate otherwise.

7. To insure that the two-piece spring guide (E, F, Fig. 19) in the pressure relief valve assemblies are properly aligned, stack assemblies and insert vertically by inverting the steering valve housing. The top portion of the valve could become cocked and damage seat upon installation.

8. Secure steering valve assembly to tractor and connect hydraulic lines. Be sure lines are connected to proper fittings.

CAUTION: Be sure that everyone is clear of the tractor and attached implements. Slight steering movement could suddenly and rapidly occur when engine is started. Have a secure hand hold, as the following is not necessarily a smooth or slow operation.

9. Start engine and cycle steering several times to bleed air from system, continue until smooth operation, lock-to-lock, is obtained.

STEERING AND FEEDBACK CYLINDERS

Steering Cylinders

Removal

1. Relieve hydraulic pressure.
2. Disconnect hydraulic lines from cylinders and lubrication lines from front retaining pins.

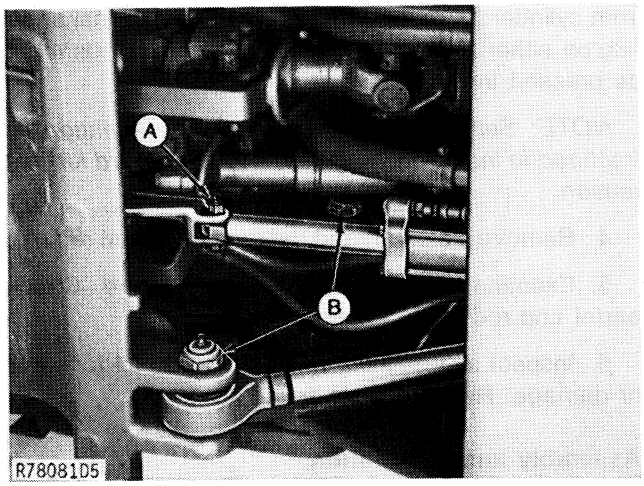

A—Feedback Cylinder Retaining Pin
B—Steering Cylinder Retaining Pins

Fig. 21-Feedback and Steering Cylinder Removal

3. Remove retaining pins (A, B, Fig. 21) and cylinders from tractor.

Disassembly and Inspection

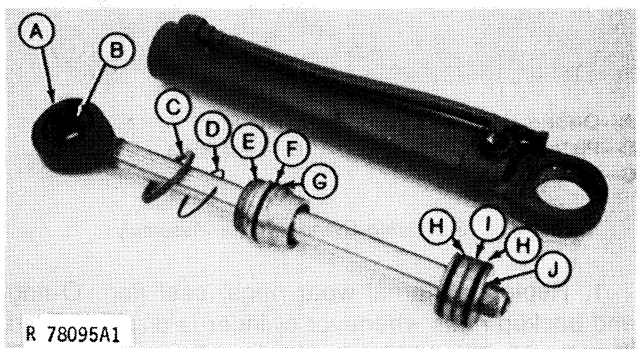

A—Rod
B—Self-Aligning Bushing
C—Spanner Nut
D—Snap Ring
E—Rod Guide
F—Backup Ring
G—O-Ring
H—Wear Ring
I —Seal Ring
J —Piston

Fig. 22-Steering Cylinder Assembly

STEERING AND FEED BACK CYLINDERS—Continued

Steering Cylinders—Continued

Disassembly and Inspection—Continued

1. Remove spanner nut (C, Fig. 22) at rod end of cylinder.

2. Push rod guide (E) into cylinder far enough to allow removal of retaining ring (D). Remove rod with piston and rod guide.

3. To remove the self-aligning bushings and balls from cylinder barrel and rod, remove the internal snap ring on either side of the bushings (B). Bushings must be pressed from bores.

NOTE: Self-aligning bushings are intentionally fractured to install bushing ball. Do Not discard for this reason.

4. Remove piston (J) and rod guide (E) from rod (A).

5. Examine all cylinder parts for damage. Check barrel and rod guide for scoring.

6. Inspect self-aligning bushings and ball for wear or damage. Replace parts as necessary.

Assembly and Installation

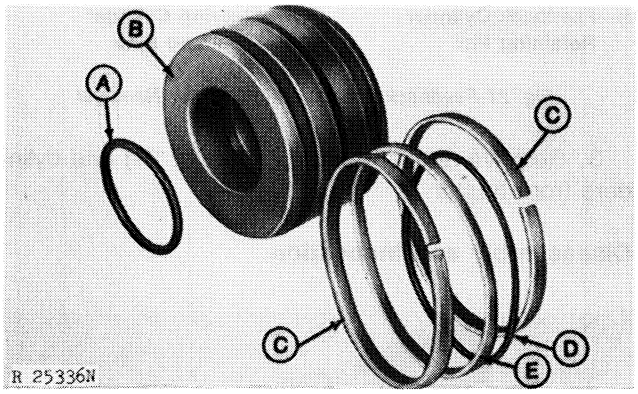

A—O-Ring
B—Piston
C—Wear Ring
D—O-Ring
E—Seal Ring

Fig. 23-Steering Cylinder Piston Assembly

1. Replace external wear rings, seal ring, O-ring, and backup rings whenever cylinder is disassembled. Dip all parts in John Deere Hy-Gard Transmission and Hydraulic Oil prior to assembly.

2. Install O-ring (A, Fig. 23) into steering piston (B) and place wear rings (C) in outer grooves of piston.

3. Install O-ring (D) in middle groove of piston with seal ring (E) on top of O-ring.

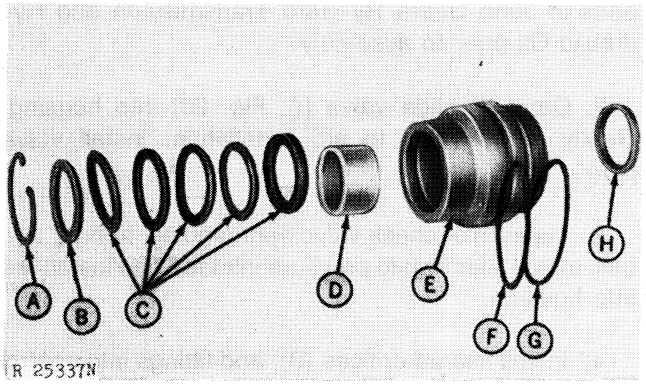

A—Retaining Ring
B—V-Packing
C—Packings
D—Wear Ring
E—Rod Guide
F—O-Ring
G—Backup Ring
H—Wiper Seal

Fig. 24-Rod Guide Assembly

4. Install hard fiber wear ring (D, Fig. 24) in rod guide (E). Place packings (C) and V-packing (B) in rod guide and secure with retaining ring (A).

5. Install O-ring (F) and backup ring (G) in rod guide groove as shown in Fig. 21.

6. Install wiper seal (H) in rod guide using disk No. 27513 and 27507 from Bushing and Seal Driver Set until seal is flush with face of rod guide.

7. Slide spanner (1, Fig. 25) and rod guide assembly (4) onto rod.

8. Slide piston assembly (11) on rod (17) and torque piston nut (15) to 150-250 ft-lbs (203-339 Nm) (20-34 kgm).

9. Prior to assembly coat the cylinder walls and piston, rod, and guide with John Deere Hy-Gard Transmission and Hydraulic Oil.

10. Slide piston rod assembly into cylinder. Install snap ring over shaft and into cylinder. Torque spanner nut to 125-175 ft-lbs (169-237 Nm) (17-24 kgm).

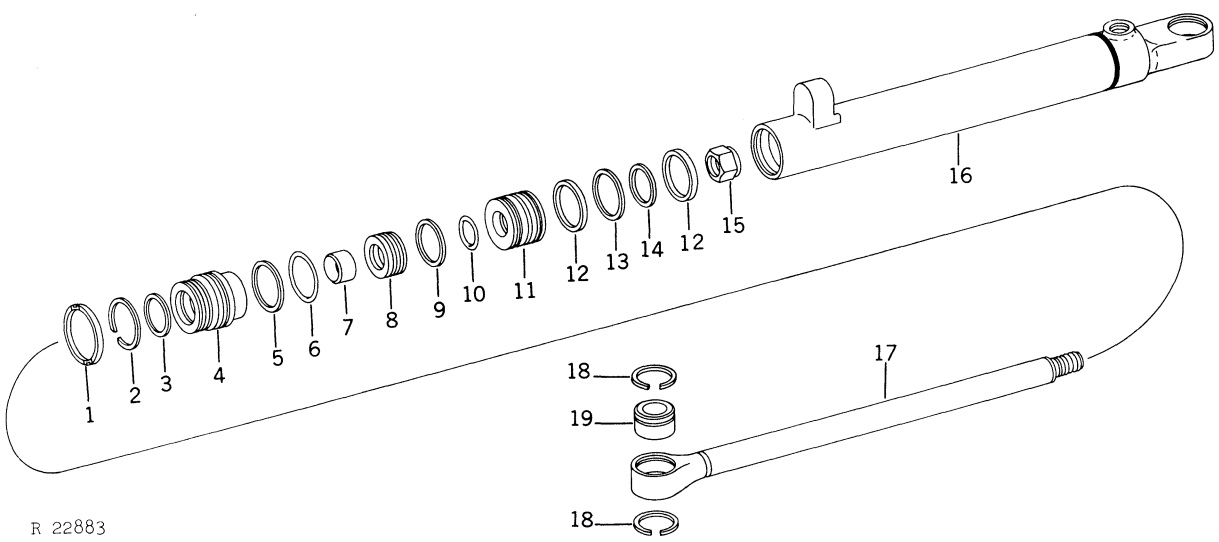

1—Spanner Nut
2—Retaining Ring
3—Wiper Seal
4—Rod Guide
5—Backup Ring
6—O-Ring
7—Wear Ring
8—Packing
9—Retaining Ring
10—O-Ring
11—Piston
12—Piston Wear Ring (2 used)
13—Outer Piston Seal Ring
14—Inner O-Ring
15—Lock Nut
16—Cylinder
17—Rod
18—Snap Ring (2 used)
19—Self-Aligning Bushing (2 used)

Fig. 25-Steering Cylinder (Exploded View)

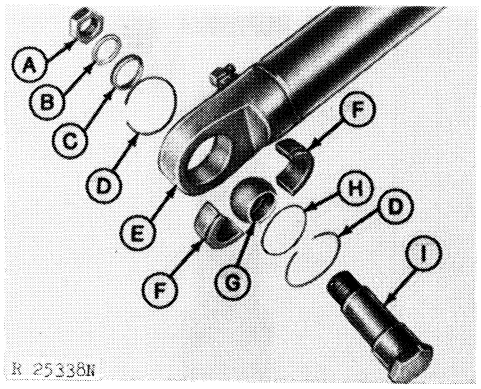

A—Nut
B—Washer
C—Spacer
D—Snap Ring
E—Steering Cylinder
F—Bushing Half
G—Ball
H—Retaining Ring
I —Retaining Pin

Fig. 26-Cylinder Retaining Assembly

11. Insert ball (G, Fig 26) between the two bushings (F) and install the retaining ring (H) to hold the assembly together. Press assembly into cylinder and rod ends with fracture of bushings perpendicular to body of cylinder. Install snap rings (D) to secure bushings. See Fig. 23.

12. Install cylinder in hinge area. Be sure chamfer of spacer (C) is toward ball (G). Attach hydraulic lines to cylinder and retaining pin lubrication lines to the front pins. Torque retaining pin nut to 400 ft-lbs (542.4 Nm) (55.2 kgm).

Feedback Cylinder

Removal

1. Relieve hydraulic pressure. Disconnect hydraulic and lubrication lines from feedback cylinder, noting to what ports lines were connected.

2. Disconnect cylinder from bracket on rear hinge. Remove cylinder and front bracket together from the hinge area.

Feedback Cylinder—Continued

Disassembly and Inspection

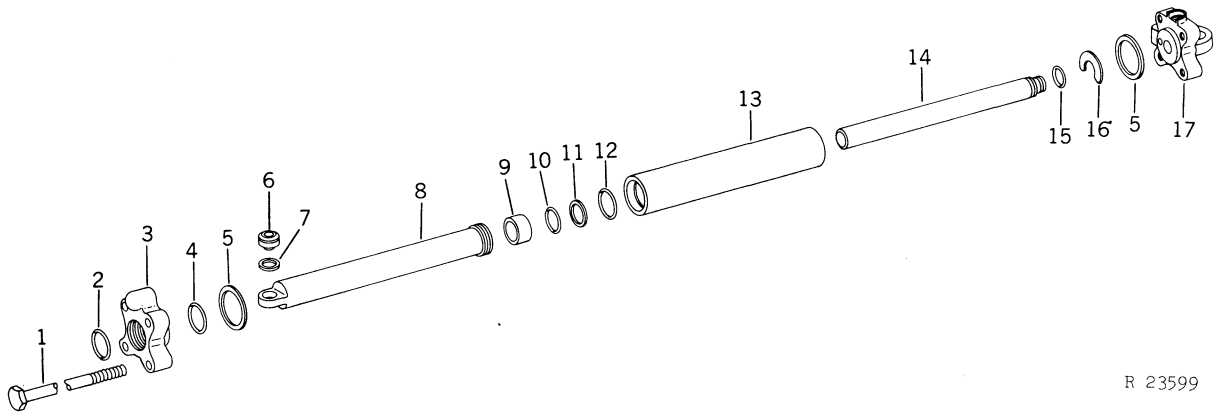

1—Bolt (4 used)
2—Wiper Seal
3—Rod End Cap
4—O-Ring
5—O-Ring (2 used)
6—Bushing (2 used)
7—Spacer (2 used)
8—Outer Rod
9—Bushing
10—O-Ring
11—Backup Ring
12—O-Ring
13—Cylinder
14—Inner Rod
15—O-Ring
16—Retainer
17—Head End Cap

Fig. 27-Feedback Cylinder

Remove the four long through bolts (1, Fig. 27) and slide rod end-cap (3) off cylinder rod and the cylinder head end-cap (17) from cylinder.

Examine cylinder barrel (13), inner rod (14) and outer rod (8) for scoring or damage. Replace as necessary.

Inspect all internal and external O-rings for damage. Replace as necessary.

Check bushing (9) in outer rod (8) for wear or damage. Bushing I.D. is 1.1265-1.1295 in. (28.613-28.689 mm). Inner rod O.D. is 1.1242-1.1261 in. (28.555-28.605 mm).

Assembly

1. Dip new O-rings and all parts in clean John Deere Hy-Gard Transmission and Hydraulic Oil prior to assembly.

2. Install O-ring (10, Fig. 27) and backup ring (11) in I.D. of outer rod (8) with backup ring toward the open end of the rod. Place O-ring (12) on O.D. of outer rod (8).

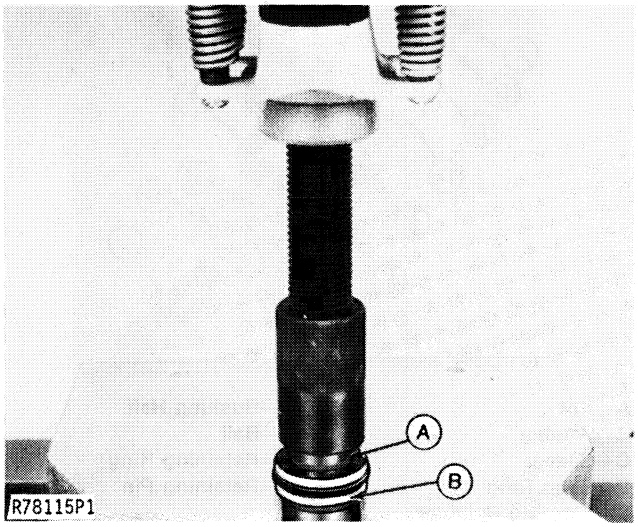

A—Driver Disks **B—Outer Rod**

Fig. 28-Outer Rod Bushing Installation

3. If necessary, press new bushing in outer rod, flush to 0.02 in. (0.508 mm) below outer rod surface. Use Disks No. 27501 and 27503 from the Bushing and Seal Driver set for installation. (See Fig. 28.)

Assembly—Continued

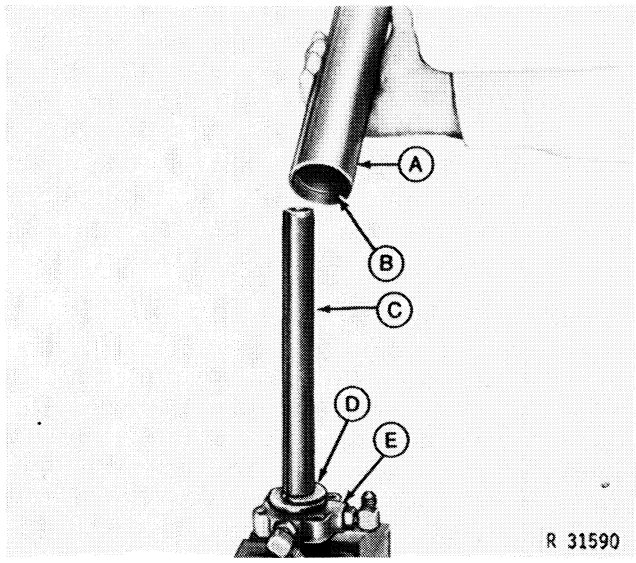

A—Cylinder
B—Shoulder
C—Inner Rod
D—Keeper
E—Head End Cap

Fig. 29-Cylinder Assembly Procedure

4. Place cap (E, Fig. 29) in vise, install O-ring on cap.

5. Install inner rod (C) into cap and insert keeper (D) onto rod.

6. Install cylinder barrel (A) with squared shoulder (B) over rod onto cap.

7. Carefully slide outer rod into cylinder barrel and over inner rod.

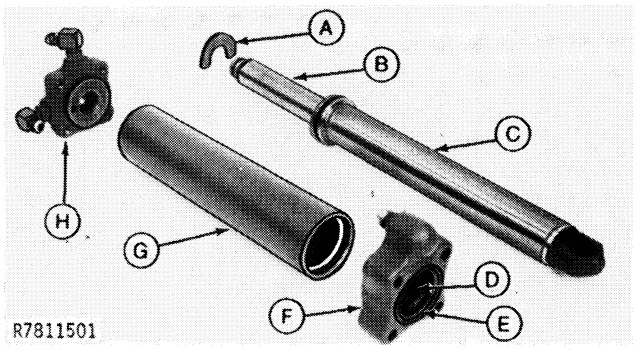

A—Retainer
B—Inner Rod
C—Outer Rod
D—O-Ring
E—Wiper Seal
F—Rod End Cap
G—Cylinder Barrel
H—Head End Cap

Fig. 30-Feedback Cylinder Assembly

8. Install O-ring (D, Fig. 30) into I.D. of cap (F) and O-ring on O.D.

9. Install wiper seal (E) in rod end-cap (F) with lips of seal outward and flush with outer edge of cap. Use Disks No. 27506 and 26512 from Bushing and Seal Driver set for installation.

10. Carefully slide cap over end of rod and into cylinder.

11. Align end caps as shown in Figure 27 and install bolts and torque to 20 ft-lbs (26 Nm) (3 kgm).

12. If self-aligning bushings were removed, press new bushings 0.13 in. (3.3 mm) below surface of bores.

13. Install feedback cylinder in hinge area. Attach hydraulic and lubricating lines to proper ports. Be sure to install locating pin spacers on the bottom side of the end-caps.

Litho in U.S.A.

Group 25
POWER BRAKES

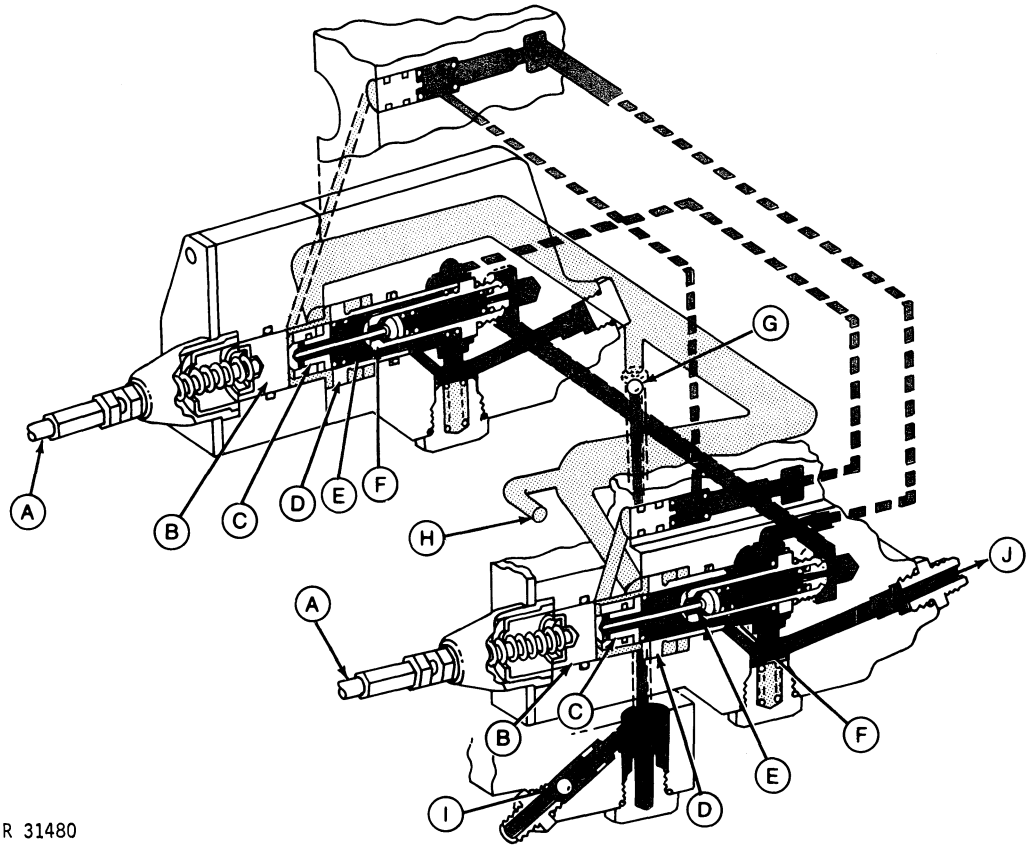

A—Operating Rod
B—Operating Rod Guide
C—Brake Valve Plunger
D—Manual Brake Piston
E—Brake Valve
F—Nipple
G—Reservoir Check Valve
H—To Sump
I —Inlet Check Valve
J—To Brake Pistons
Pressure Oil
Pressure-Free Oil

Fig. 1-Power Brake Operation

Oil from the main hydraulic pump and accumulator unseats inlet check valve (I, Fig. 1) to enter the brake valve. Oil flow stops at each brake valve nipple.

As the brake pedal is depressed, operating guides (B) simultaneously move the brake valve plungers (C) forward. This moves the brake valves (E) off their seats in the nipples (F). At the same time, the rear ends of the brake valves are seated in the plungers (C), preventing pressure oil flow into the brake reservoir.

As the brake valves (E) are moved off their seats, pressure oil flows through the brake valve nipples (F) into connecting galleries, unseating check valve disks. Oil then flows (J) through pipes to the brake cylinders.

Pressure oil in the brake cylinders forces the brake pistons and pressure plates against the brake disks. The disks are splined to the final drive shafts of the rear planetary assembly. The pressure plates move the brake disks against the brake backing plates to provide braking action.

As the pedal is released, the valve plungers (C), valves (E), and operating guides (B) return by spring force to their original positions. Return oil from the cylinders flows into the brake reservoir through a metering orifice (G).

Litho in U.S.A.

Accumulator Assisted Brakes

A loss of pressure oil causes a check valve in the accumulator inlet connector to seat, trapping oil between accumulator inlet and brake valve. The accumulator then provides normal power brakes for the first few applications. However, this pressure will eventually diminish, requiring more manual pressure on the brake pedal.

DIAGNOSING MALFUNCTIONS

First, determine whether malfunction is in brake valve or in differential compartment. Start engine and remove brake valve drain line. If oil is flowing through the line, there is a malfunction in the brake valve.

Poor or No Brakes

Manual brake piston packing failure
Damaged or broken brake valves
Water in oil (brake facing failure)
Improper oil (brake facing failure)
Bleed screws open or leaking
Wheel cylinder piston or piston packing failure

Brakes Won't Release

Operating guides stuck down
Brake valve, valve spring or seat failure
Brake valve sticking open due to foreign material in system

Brake Pedal Kick

Air in system
Brake disk warpage

Brake Facing Deteriorated

Contaminated oil
Improper oil

Brake Chatter

Improper oil

CYLINDERS, PLATES, AND DISKS

Remove rear axle housing. See Section 10, Group 25.

Inspect backing plates and pressure plates for missing rivets, wear, or loose linings.

Inspect disks for wear or excessive play on sun pinion shaft. Disk should be flat within 0.068 inch (1.727 mm).

Check brake pistons and cylinders for wear, pitting, or scoring. Piston diameter is 2.6245 to 2.6255 inches (66.662 to 66.688 mm). Bore of the brake cylinder in the transmission case is 2.6280 to 2.6310 inches (66.7512 to 66.8274 mm).

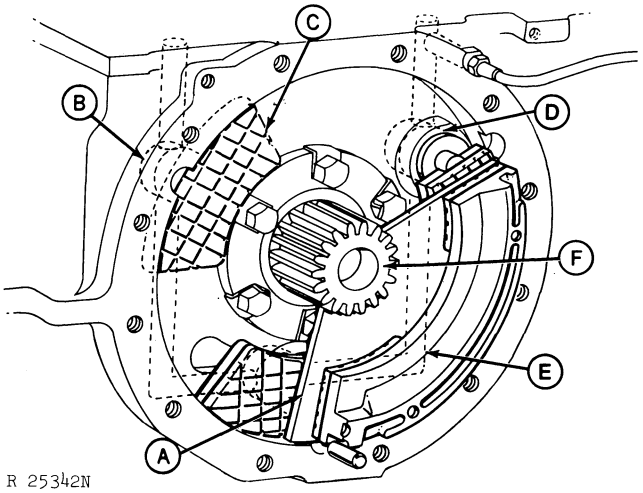

A—Brake Disk
B—Cylinder
C—Pressure Plate
D—Piston
E—Backing Plate
F—Final Drive Shaft

Fig. 2-Cylinders, Plates and Disks

Check brake piston seals.

Install pistons with pressure plates in cylinders.

Install disk over, but not behind, teeth of sun pinion.

Install backing plates with lining toward disk.

Install rear axle housing.

BRAKE VALVE

Removal

⚠ CAUTION: Discharge brake accumulator by pumping brake pedal with the engine off until pedal feel is gone.

Discharging the Accumulator

Shut the engine off and depress the brake pedal. Loosen the left-hand bleed screw lock nut and the bleed screw two turns. Tighten the lock nut. After the pedal goes all the way down, loosen the lock nut and tighten the bleed screw. Tighten the lock nut and release the pedal. This discharges the brake accumulator.

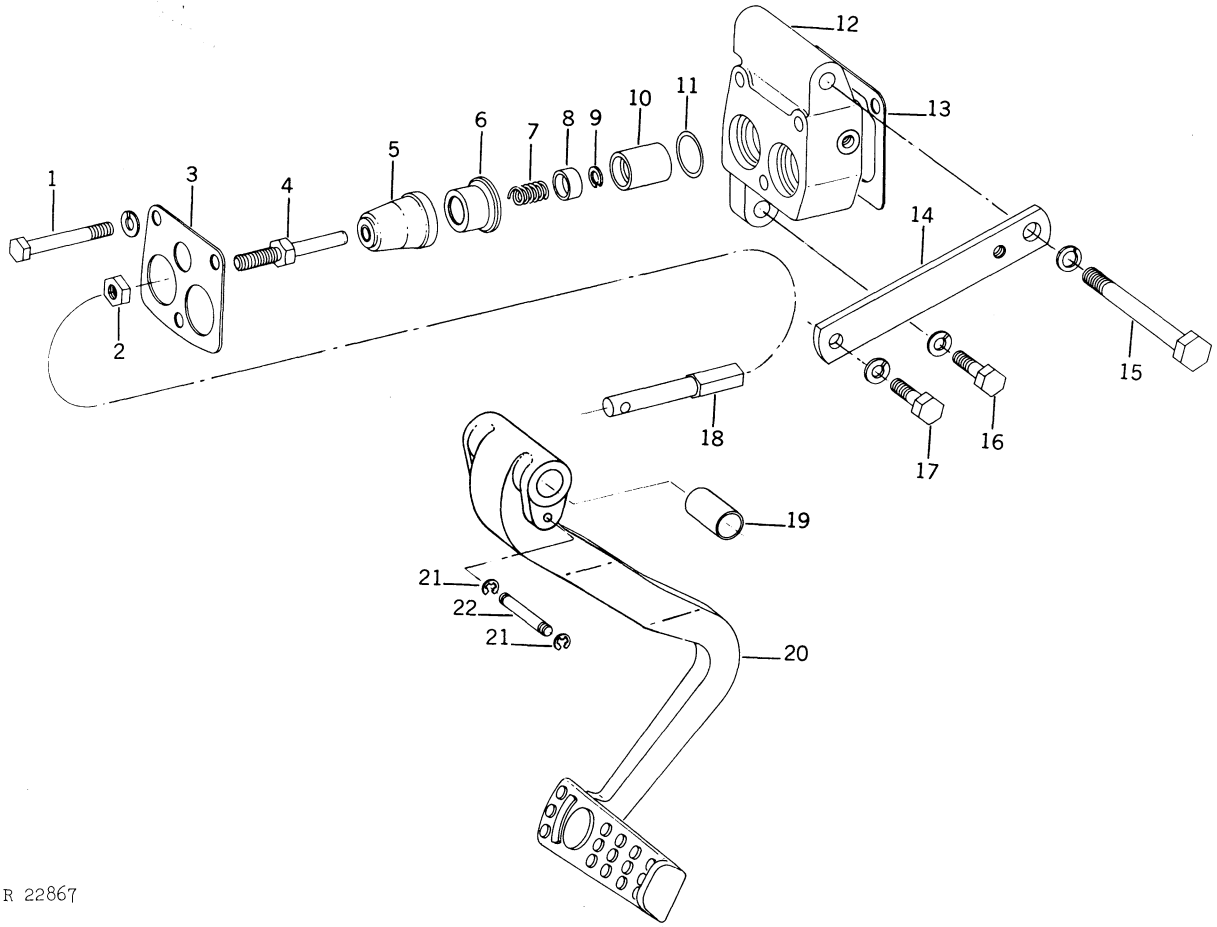

1—Cap Screw (3 used)
2—Jam Nut (2 used)
3—Retainer
4—Brake Operating Rod (2 used)
5—Boot (2 used)
6—Retainer (2 used)
7—Spring (2 used)
8—Stop (2 used)
9—Snap Ring (2 used)
10—Brake Operating Rod Guide (2 used)
11—O-Ring (2 used)
12—Brake Valve Housing Cover
13—Gasket
14—Strap
15—Cap Screw
16—Cap Screw
17—Cap Screw
18—Brake Operating Rod Extension (2 used)
19—Bushing
20—Brake Pedal
21—Retaining Ring (2 used)
22—Special Pin

Fig. 3-Exploded View of Pedal Assembly

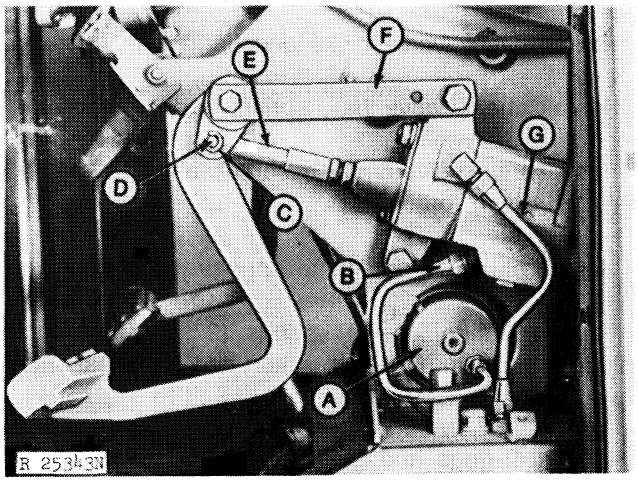

A—Brake Accumulator
B—Pressure Inlet
C—Retaining Ring
D—Special Pin
E—Operating Rod Extension
F—Stop
G—Brake Valve

Fig. 4-Brake Valve Removal

Remove hood and cowl.

Disconnect pressure (B, Fig. 4) and return (G) lines on brake valve.

Disconnect strap (F) from pedal pivot.

Remove retaining rings (C) and special pin (D) from brake pedal. Remove operating rod extensions (E) and slide pedal from pivot shaft.

Disconnect brake line from valve on engine side of bulkhead.

Remove brake valve assembly from control support.

Brake Valve Disassembly

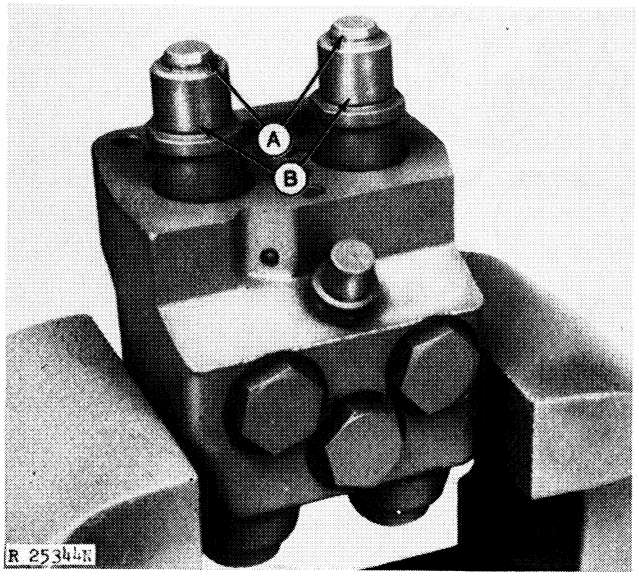

A—Brake Valve Plungers **B—Manual Brake Pistons**

Fig. 5-Plungers and Pistons

Remove retainer, valve cover, operating rods, guides, boots, and boot retainers from valve housing (Fig. 3).

Remove manual brake pistons with plungers (Fig. 5) and springs. Plungers can be pressed from pistons by hand pressure.

Remove plugs (1, Fig. 7) and springs (3).

Use a deep-well socket to remove brake valve assemblies (26, Fig. 7).

Inspection

Inspect all parts for wear, scoring, or breakage and replace parts as required.

Inspect operating rod stop retainer for a dished surface.

Check upper end of operating rod guide for corrosion or dirt buildup which may restrict full release of guide.

Use the following specifications when examining brake valve parts:

Item	Measurement	New Part
Brake valve plunger	O.D.	0.5595 to 0.5605 in. (14.211 to 14.237 mm)
Brake valve plunger bore	I.D.	0.5610 to 0.5630 in. (14.249 to 14.275 mm)
Brake manual piston	O.D.	0.9330 to 0.9350 in. (23.698 to 23.749 mm)
Brake manual piston bore	I.D.	0.9365 to 0.9375 in. (23.787 to 23.800 mm)

Check brake valve plunger return spring for broken coils. Spring should compress to 1.6875 inches (42.86 mm) at 39 to 47 lbs. (173 to 209 N) pressure.

Check wear on pivot pin, pedal bushing, operating rod extensions, and special pin. Bushing I.D. should be 0.749 to 0.753 inch (19.02 to 19.13 mm).

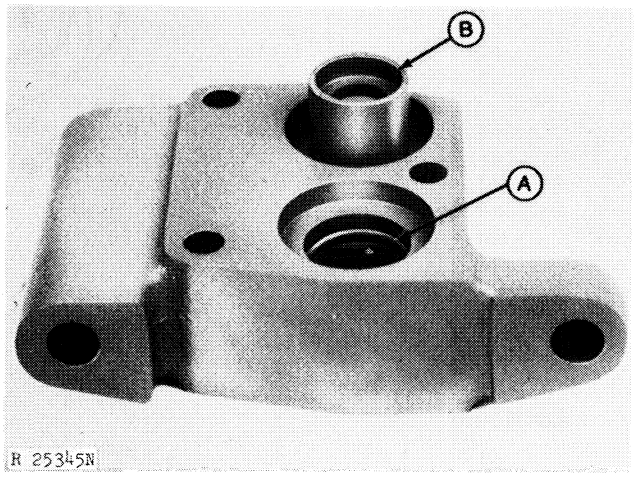

A—O-Ring **B—Guide**

Fig. 6-Cover, Guide, and O-Ring

Assembly

Dip new O-rings and parts in clean John Deere Hy-Gard Transmission and Hydraulic Oil before assembly.

Install check valve disks and springs in housing.

Install check valve ball, spring, and screen.

Install brake valve nipple assembly and tighten to 40 ft-lbs (54 Nm) torque.

Install plugs, O-rings and springs.

Install plunger return springs (27, Fig. 7). Push plunger into manual brake piston and place assembly over spring.

Install O-rings and guides in valve cover.

Place boots, boot retainers, springs, stops, and snap rings on operating rods and install in guides.

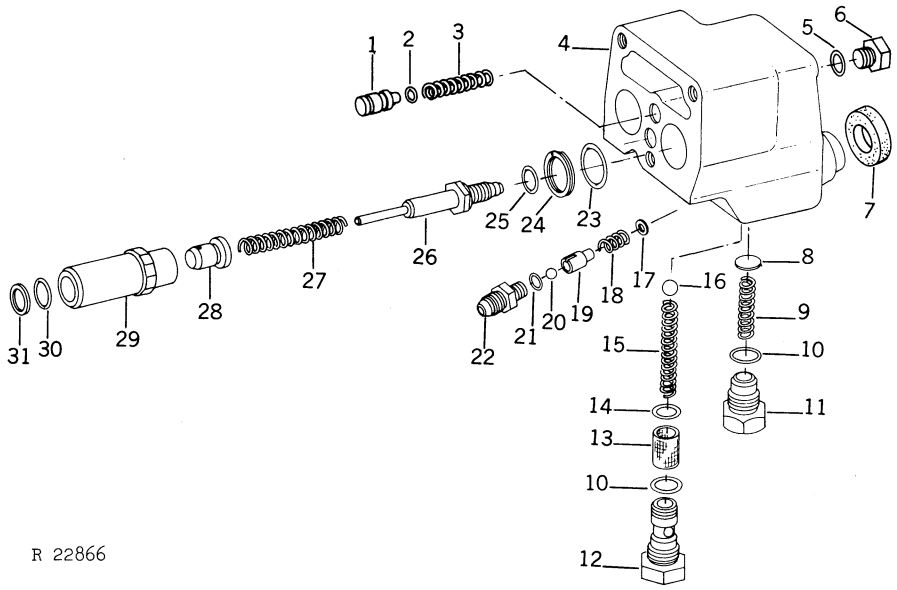

1—Plug (2 used)
2—O-Ring (2 used)
3—Spring (2 used)
4—Brake Valve Housing
5—O-Ring
6—Plug
7—Gasket (2 used)
8—Check Valve Disk (2 used)
9—Spring (2 used)
10—O-Ring (3 used)
11—Plug (2 used)
12—Plug
13—Filter Screen
14—Packing
15—Spring
16—Steel Ball
17—Washer
18—Spring
19—Inlet Guide
20—Steel Ball
21—O-Ring
22—Connector
23—O-Ring (2 used)
24—Backup Ring (2 used)
25—O-Ring (2 used)
26—Valve Nipple Assembly (2 used)
27—Spring (2 used)
28—Brake Valve Plunger (2 used)
29—Manual Brake Piston (2 used)
30—O-Ring (2 used)
31—Treated Paper Washer (2 used)

Fig. 7-Exploded View of Brake Valve

Install retainer on valve cover and attach cover to brake valve housing.

Install assembly on tractor and connect hydraulic lines.

To install operating rod extensions and brake pedal, reverse the removal procedure.

Adjustment

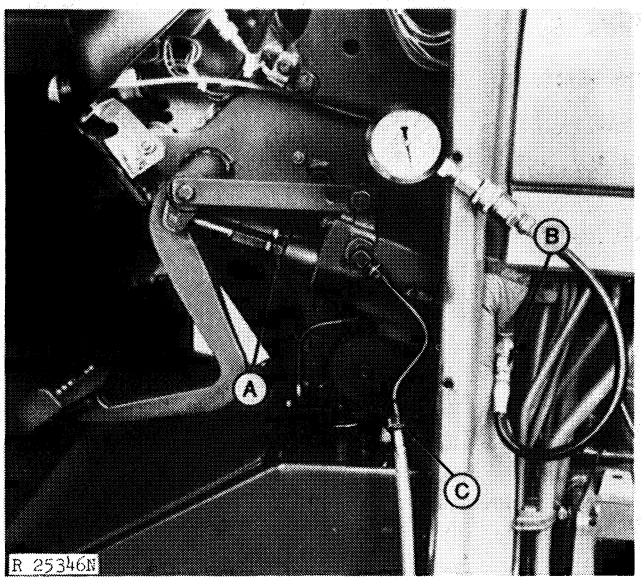

A—Operating Rod Adjusting Nut
B—Brake Valve Pressure Outlet
C—Brake Valve Return

Fig. 8-Brake Valve Adjustment

The brake valve operating rods must be adjusted to open the valves simultaneously to prevent damage to the valve assembly and insure pressure oil to the brakes.

Use the following procedure to adjust the brake valve:

1. Connect a hose to the brake valve return fitting (Fig. 8). Place other end of hose in suitable container.

2. Connect a 0-3000 psi (0-200 bar) pressure gauge to pressure outlet of brake valve.

3. Connect the brake valve pressure inlet to a hydraulic source providing at least 2250 psi (155 bar) continuous hydraulic pressure.

4. Adjust operating rod extensions so that pedal is 5.5 inches (139.7 mm) from foot rest.

5. Pressurize brake valve and operate pedal to bleed air from lines and valve.

6. Operate pedal to open brake inlet valves. Apply a steady force to pedal to obtain a 1000 psi (69 bar) reading on the pressure gauge. Pressure should return to "0" when pedal is released.

7. A continuous flow of oil from the brake valve return indicates that the brake valve must be adjusted. To adjust, turn the operating rod adjusting nut on one of the rods in or out until oil flow stops.

8. If the adjustment does not stop oil flow, the brake valve should be disassembled and examined for contaminants or possible packing or O-ring failures.

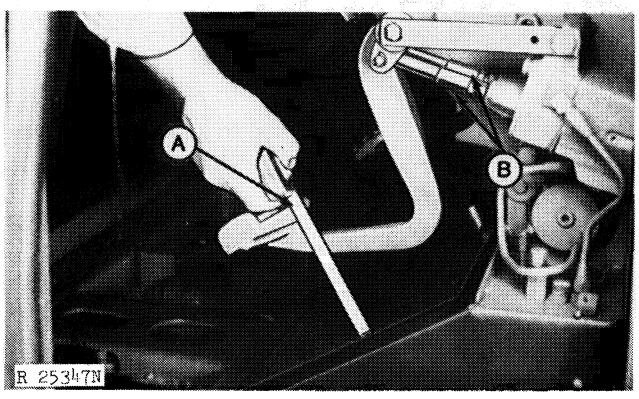

A—Measure at Right Angle from Footrest to Pedal Crown

B—Operating Rod Extension

Fig. 9-Brake Pedal Adjustment

Adjust pedal height as shown in Fig. 9 to 5.75 to 5.87 inches (146.5 to 149.1 mm). Measure without floormat in place.

BLEEDING BRAKES

⚠ CAUTION: Insert hinge lock bars to prevent frames from turning before bleeding the brakes.

Power Brakes

The power brakes should be bled after every 200 hours of operation or whenever brake system is repaired.

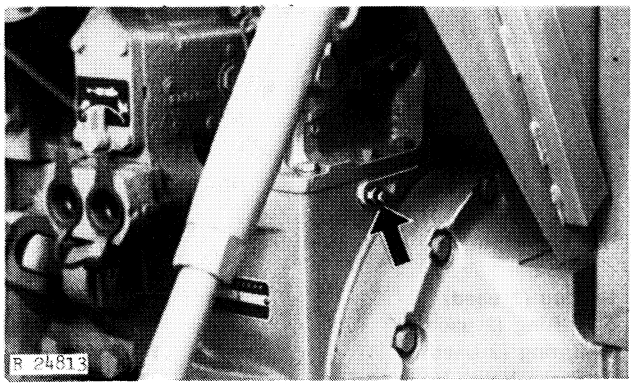

Fig. 10-Brake Bleed Screw and Lock Nut

To bleed the brakes, loosen the right-hand bleed screw lock nut FIRST. Open the bleed screw two turns and tighten the lock nut. This prevents oil from leaking around the bleed screw. Start the engine and depress the brake pedal. After holding the pedal down for two minutes to bleed air from the system and before releasing the brake pedal, loosen the lock nut and tighten the brake bleed screw. Tighten the lock nut.

AFTER the right-hand brakes are bled, loosen the left-hand brake bleed screw lock nut. Loosen the bleed screw two turns and tighten the lock nut. Depress the brake pedal for two minutes to bleed the left-hand brakes. While holding the pedal down, loosen the lock nut and tighten the brake bleed screw before releasing the pedal. Pedal feel should be solid and brake pedal travel should not exceed 3 inches (76.2 mm). If travel is excessive, repeat the bleeding procedure.

Litho in U.S.A.

BRAKE ACCUMULATOR

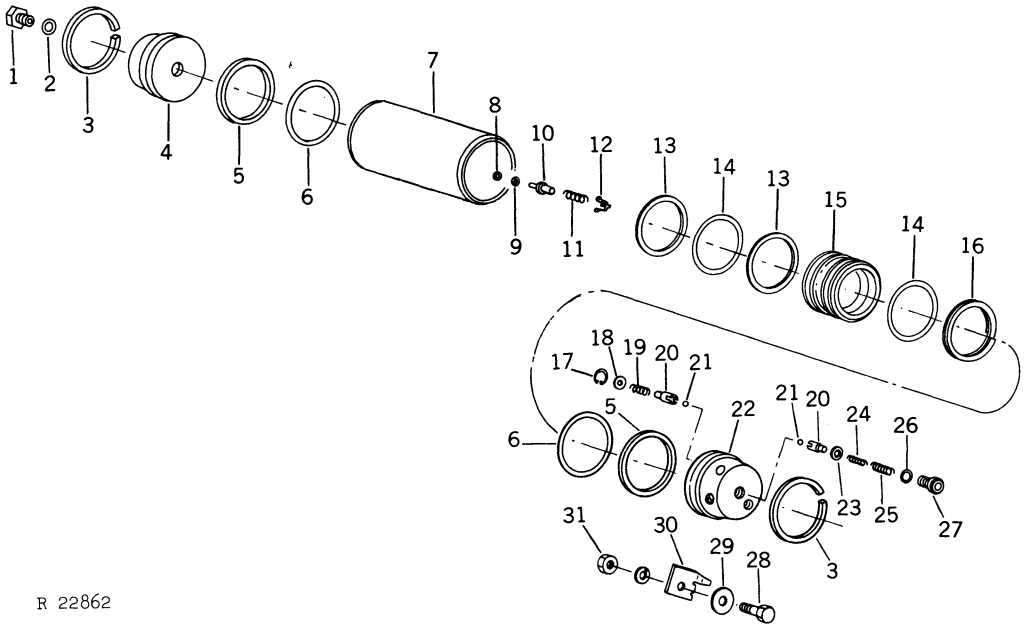

1—Plug
2—O-ring
3—Retaining Ring (2 used)
4—Accumulator Cylinder End
5—Backup Ring (2 used)
6—O-ring (2 used)
7—Cylinder
8—Packing
9—Special Washer
10—Charging Valve
11—Spring
12—Guide
13—Backup Ring (2 used)
14—O-ring (2 used)
15—Piston
16—Backup Ring
17—Retaining Ring (Inlet check valve)
18—Special Washer (Inlet check valve)
19—Spring (Inlet check valve)
20—Inlet Guide (2 used)
21—Ball (2 used)
22—Accumulator Cap
23—Washer (2 used) (Thermal relief valve)
24—Inner Spring (Thermal relief valve)
25—Outer Spring (Thermal relief valve)
26—O-ring
27—Special Plug (Thermal relief valve)
28—Cap Screw
29—Clip
30—Hex Nut
31—Lock Washer

Fig. 11-Brake Accumulator

Removal

Discharge brake accumulator. See "Caution," page 25-2.

Disconnect hydraulic lines. Remove accumulator retaining clip and accumulator from tractor.

Repair

⚠ CAUTION: Bleed all nitrogen gas from accumulator before attempting to disassemble. Bleed by removing plug over charging valve and pressing charging valve in until gas has escaped.

Remove retaining rings (3, Fig. 11) on accumulator caps. Remove caps and accumulator piston.

Check piston and piston bore for scoring or damaged packings and O-rings. As a reference, the O.D. of the piston is 2.993 to 2.996 inches (76.02 to 76.10 mm). The I.D. of the bore is 2.998 to 3.001 inches (76.15 to 76.23 mm).

Check springs on thermal relief and inlet check valves. The inner thermal relief valve spring should compress to 0.84 inch (21.33 mm) at 5.8 to 7.2 lbs. (25.8 to 32.0 N). The outer thermal relief check valve spring should compress to 1.00 inch (25.40 mm) at 37.8 to 46.2 lbs. (168 to 206 N). Inlet check valve spring should compress to 0.22 inch (5.58 mm) at 1.55 to 1.95 lbs. (6.9 to 8.7 Nm).

Inspect accumulator charging valve, spring valve guide, and packing for damage.

Replace parts as necessary.

Assembly

Dip O-rings, packings, and parts in clean John Deere Hy-Gard Transmission and Hydraulic Oil.

Install charging valve, O-rings, packing, spring, O-ring, and plug.

Install backup rings and O-rings (13, 14, and 16) on piston as shown in Fig. 11. Install piston with small cavity end toward charging valve into cylinder.

Install thermal relief and inlet check valve assemblies in cylinder end cap.

Install O-ring and backup ring on caps and secure caps in cylinder with retaining rings.

Pre-Charging Accumulator

CAUTION: Use only dry nitrogen to pre-charge the accumulator. Dry nitrogen does not mix with oil. It is non-combustible. It will not cause oxidation or condensation within the accumulator and is not harmful to the piston seal. DO NOT use air or any combustible gas as these may cause oxidation and condensation. Oxidation and condensation are harmful to the oil piston seal and the accumulator.

If the D-15010ND, D-15011ND or D-15012ND Accumulator Charging Kit is used, charge the accumulator as follows:

1. Remove the accumulator plug and install the Brake Accumulator Adapter included in the kit.

2. Attach the accumulator to the gas valve. Attach the high-pressure hose to the dry nitrogen tank.

3. Open the dry nitrogen tank valve. Open the gas valve until 475 to 525 psi (32.75 to 36.19 Bar) registers on the pressure gauge. Close the gas valve.

4. Remove the gas valve and adapter from the accumulator and reinstall the plug.

If ND-925 Accumulator Charging Kit is used to charge the accumulator, convert it to this application and charge the accumulator as follows:

1. Remove ND-925-1 gas cock at the union and install R27346R connector.

2. Install a 1/4 inch (6.35 mm) high pressure hose, such as AR36561, to the connector.

3. Remove the accumulator plug and install R27272R connector in its place.

4. Attach the high pressure hose to the connector on the accumulator. Attach the charging kit hose to the dry nitrogen charging tank.

5. Open the charging tank control valve until 475 to 525 psi (32.75 to 36.19 Bar) is registered on the pressure gauge. Shut control valve.

6. Remove high pressure hose from the accumulator and reinstall the plug.

NOTE: If the accumulator is over-charged, remove the connector from the accumulator. Depress the valve in the accumulator to allow excess gas to escape.

Testing

Install the accumulator on tractor.

Start the tractor engine and run at 1900 rpm to pressurize the hydraulic system.

Bleed the brakes.

Stop engine. **Wait for at least 15 minutes, and then apply brakes five times at five second intervals.** Failure to have power brakes in five applications or less indicates a malfunction in the accumulator.

Group 30
ROCKSHAFT AND IMPLEMENT HITCHES

GENERAL INFORMATION

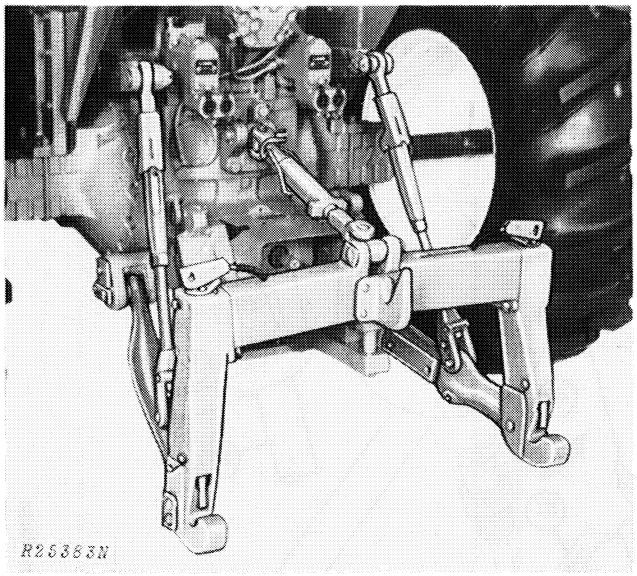

Fig. 1-Rockshaft and Quik-Coupler Hitch (Early Model)

The rockshaft assembly contains a single-acting cylinder and piston, rockshaft, lift arms, control valves and load sensing mechanism.

Pressure oil moves the piston, rod and crank arm (which is splined to the rockshaft) to rotate the rockshaft and raise the lift arms. The weight of the implement or hitch lowers the lift arms when rockshaft pressure oil is released from the cylinder to the crank arm cavity.

Control valves direct oil to and from the rockshaft cylinder. A flow control valve controls the rate of lift and the throttle valve controls the lowering rate.

A thermal relief valve in the control valve housing relieves oil pressure due to thermal expansion of oil in the rockshaft cylinder and valve housing. A relief valve in the rockshaft piston cover relieves high oil pressure caused by transport bounce of heavy implements.

Sensing of the load on the draft links is accomplished by hydraulic and mechanical means which activate the rockshaft control valves. The degree of load sensing is set by the load selector lever, which can be varied from "ZERO" (depth controlled by the position of the console lever only) to "MAX" (maximum sensitivity to load sensed on the draft links). On later model tractor "ZERO" on the console has been changed to "MIN".

With the load selector lever in the "MIN" position, the load sensing mechanism operates at minimum sensitivity which allows the rockshaft control lever to control working depth regardless of the amount of pull required.

With the load selector lever in the "MAX" position, the load sensing mechanism operates at maximum sensitivity, allowing the rockshaft to automatically raise or lower the hitch to maintain constant load through variations in soil density or ground contour.

The 3-point hitch consists of center link, lift links, draft links, and Quik-Coupler. It is adaptable to either Category 3 or Category 3N positions.

A lift-assist cylinder on 8630 tractors, helps in raising the rockshaft.

Litho in U.S.A.

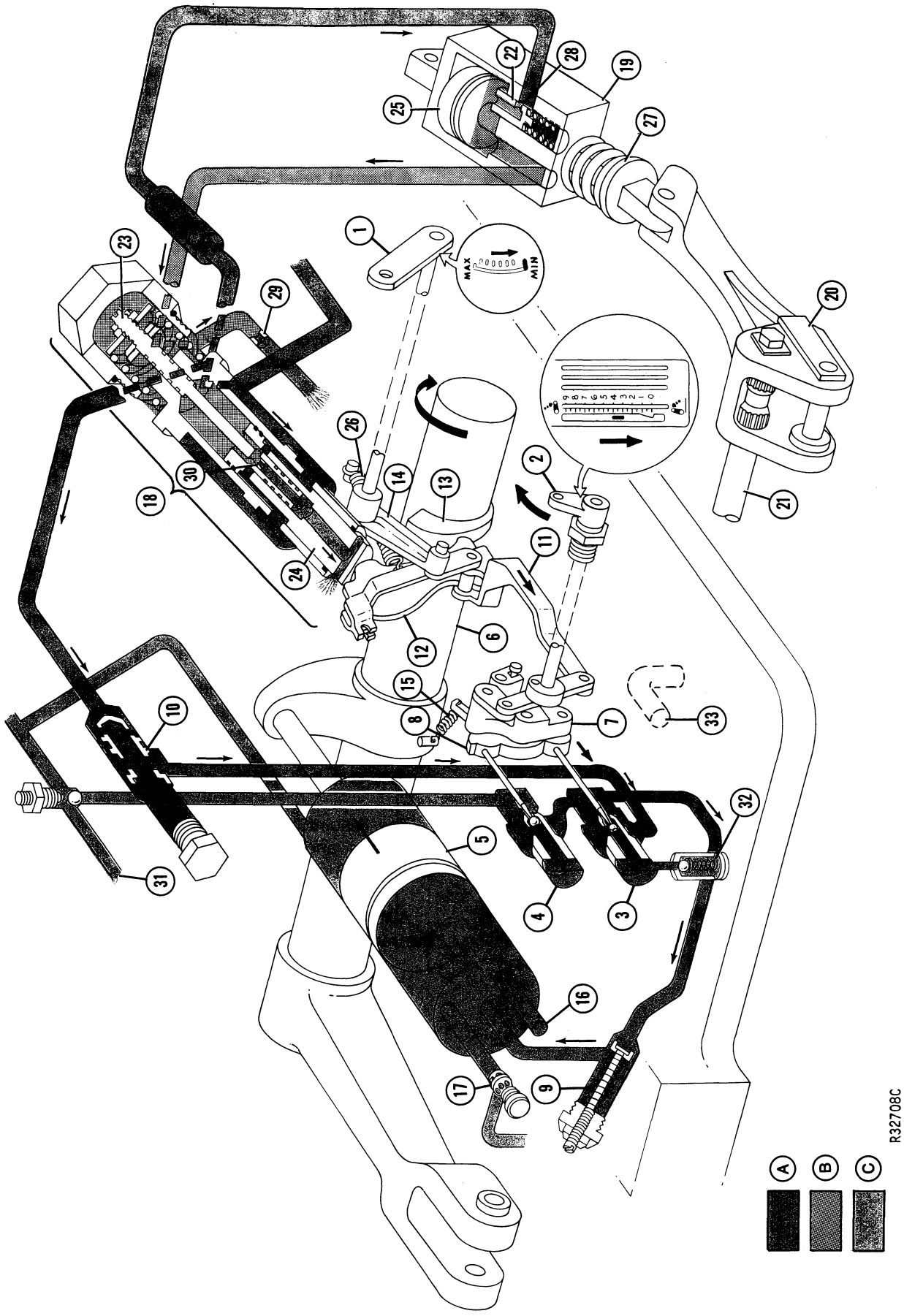

Fig. 2- "Zero"-Depth Position-Raise

Rockshaft Operation

Neutral (Hitch not in full raised or full lowered position)

When the load selector lever (1, Fig. 2) is in "zero" and there is no movement of the console lever or when the load selector lever is in "max" and no change in load is sensed, both pressure and return valves (3) and (4) are closed.

Oil is trapped in the rockshaft cylinder, holding the piston (5) and rockshaft (6) in a set position.

"Zero"-Depth Position

With the load selector lever at "Zero", the valve operating link (11, Fig. 2) is located on the bottom of the servo cam follower (12) which in turn contacts the rockshaft servo cam (13).

Raise

To raise the rockshaft, the console lever is pulled to the rear.

The valve operating shaft (2) and link (7) turn cam (8) in a clockwise direction to open pressure valve (3). Pressure oil (A) through the flow control valve (10) passes through the pressure valve and the throttle valve (9) into the rockshaft cylinder.

The pressure into the cylinder forces the rockshaft piston and rod to rotate the rockshaft and raise the lift arms.

As the servo cam (13) rotates, follower (12) and operating link (11) move toward the rockshaft. If the console lever movement is stopped short of a full raise, the link gradually turns the valve operating cam back to neutral, allowing valve operating spring (15) with the help of the pressure valve spring to rotate the cam (8) counterclockwise and allow the pressure valve to close. With both pressure and return valves closed, oil is trapped, rockshaft rotation is stopped and held in a set position.

If the console lever is moved to a complete raised position, pressure valve position is always open.

Lower

Moving the console lever forward lowers the rockshaft.

Lever action allows the valve operating spring (15) to rotate the valve operating cam (8) counterclockwise. The cam opens the return valve (4), allowing the oil (C) in the rockshaft cylinder to flow to function return passage (31).

With the oil in the cylinder free to flow, the weight of the hitch and implement lowers the rockshaft.

An adjustable orifice in the throttle valve (9) governs the lowering rate.

1—Load Selector Lever
2—Valve Operating Shaft
3—Pressure Valve
4—Return Valve
5—Piston
6—Rockshaft
7—Valve Operating Link
8—Valve Operating Cam
9—Throttle Valve
10—Flow Control Valve
11—Valve Operating Link
12—Servo Cam Follower
13—Servo Cam
14—Load Selector Inner Arm
15—Valve Operating Spring
16—To Lift Assist Cylinder
17—Surge Relief Valve
18—Load Sensing Valve
19—Sensing Cylinder
20—Draft Arm
21—Draft Link Pivot Shaft
22—Sensing Cylinder Valve
23—Load Control Valve
24—Load Control Piston
25—Sensing Cylinder Piston
26—Cam Follower Spring
27—Springs
28—Orifice
29—Orifice
30—Orifice
31—Function Return Passage
32—Thermal Relief Valve
33—Directional Control Valve Port
A—Pressure Oil
B—Load Sensing Oil Pressure
C—Rockshaft Oil

Legend for Fig. 2

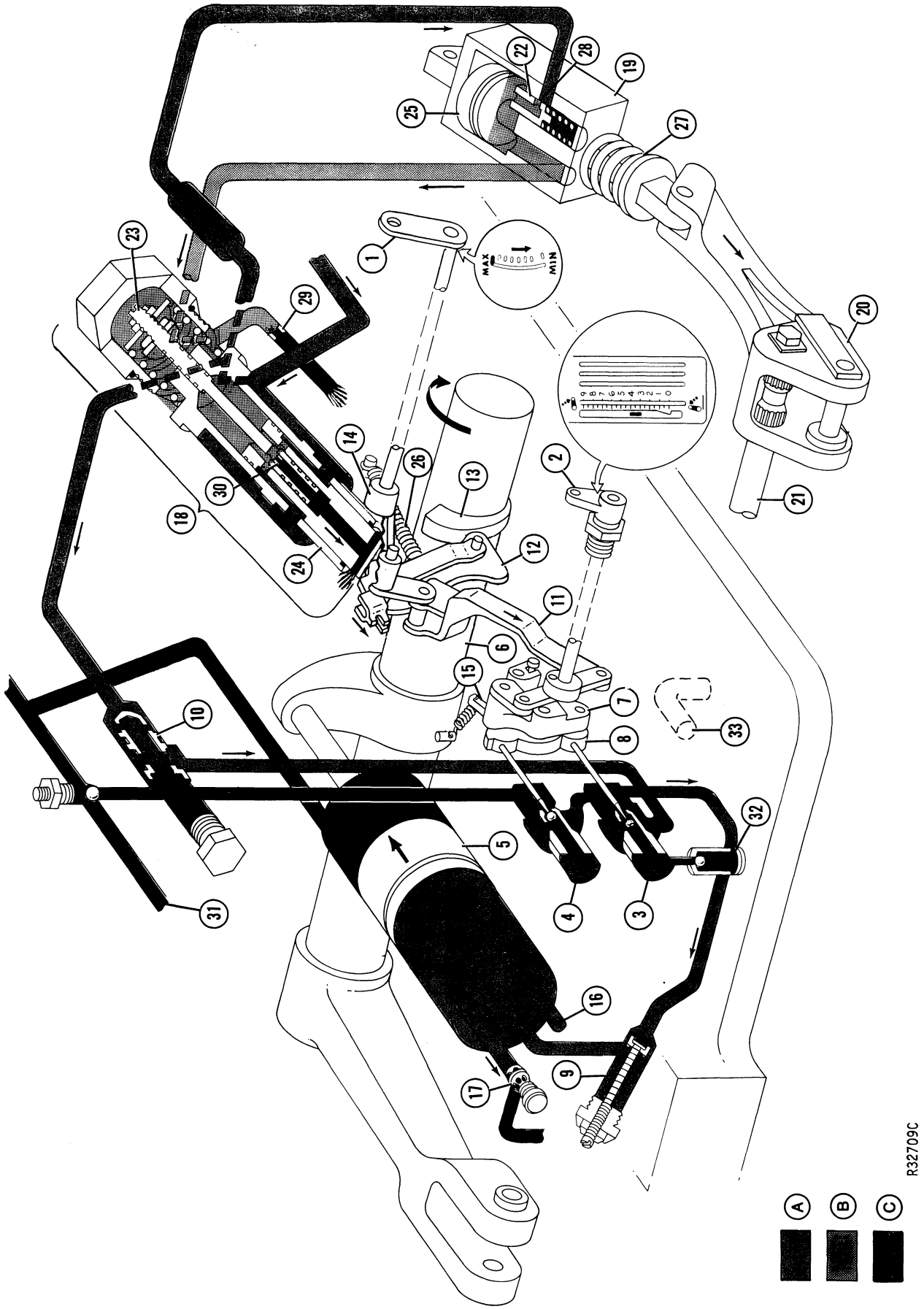

Fig. 3- "Max"-Load Position - Raise

Load Sensing System

The load sensing system consists of a valve and piston assembly (18, Fig. 3) located in the rockshaft valve housing and a sensing cylinder (19) mounted at one end to the right-hand side of the transmission case.

The rod end of the sensing cylinder is attached to a draft arm (20) which is splined to the draft link pivot shaft (21) that extends across the bottom of the transmission case. Another draft arm is splined to the left-hand end of the pivot shaft and it is to these two draft arms that the draft links are attached.

No-Load Conditions

When the engine is started, high pressure oil (A) into the sensing cylinder forces the sensing cylinder piston (25) forward.

Valve (22), which is spring-loaded against the piston, has a neutral position such that the flow it allows into the piston cavity is equal to the flow out of the piston cavity which must pass through an orifice (29) located in the rockshaft control valve housing.

The high pressure oil causes the piston (25) and valve (22) to move forward until the valve reaches its neutral position. At that point the valve is metering flow of oil into the piston cavity such that the pressure (B) behind the piston is equivalent of pressure required to compress springs (27) to this height. This pressure is referred to as reverse load sensing pressure. This pressure acts against the load control valve (23) and moves the valve rearward against its spring until resisting spring load equals the amount of sensing pressure. As the valve moves rearward, it causes piston (24) to extend a corresponding amount and move the cam follower (12).

With the load selector lever (1) in "MAX" and an implement attached, the position of the rockshaft control lever in its console slot is representative of a desired draft load, rather than depth.

Manually moving the rockshaft control lever forward causes the rockshaft to lower until the draft load created by the implement is equivalent to that called for by rockshaft lever position.

Moving the rockshaft lever forward to a pre-set position causes return valve (4) to open, allowing rockshaft cylinder oil to flow to the function return passage (31) and the implement to lower.

As the implement enters the ground, the soil forces create a draft load in the draft links. This draft force is transmitted to the sensing cylinder (19) by the draft arms (20). This draws the sensing cylinder piston (25) and valve (22) rearward. This movement of the valve allows more oil flow into the sensing cylinder causing sensing pressure to increase. This increase in sensing pressure results in rearward movement of the load control valve (23) piston (24), and cam follower (12).

The movement of the cam follower is transmitted by link (11) to the valve operating cam (8). The cam is rotated clockwise, causing the return valve (4) to close. At this point the hitch stops lowering and the draft load on the draft links is equal to that called for by the position of the rockshaft operating lever.

Increasing Loads - Raise

Load or draft higher than those pre-set, pull the draft links and pivot arms (20) to open valve (22) and increase pressure on the front of the load control valve. The valve allows the piston (24) to push harder against the cam follower (12). The valve operating link (11) riding in "Max" position at the top of the follower, receives this force, moves rearward to overcome spring and oil pressure to open pressure valve (3) and raise the rockshaft. The rockshaft continues to raise until the draft load has decreased to a preset value.

1—Load Selector Lever
2—Valve Operating Shaft
3—Pressure Valve
4—Return Valve
5—Piston
6—Rockshaft
7—Valve Operating Link
8—Valve Operating Cam
9—Throttle Valve
10—Flow Control Valve
11—Valve Operating Link
12—Servo Cam Follower
13—Servo Cam
14—Load Selector Inner Arm
15—Valve Operating Spring
16—To Lift Assist Cylinder
17—Surge Relief Valve
18—Load Sensing Valve
19—Sensing Cylinder
20—Draft Arm
21—Draft Link Pivot Shaft
22—Sensing Cylinder Valve
23—Load Control Valve
24—Load Control Piston
25—Sensing Cylinder Piston
26—Cam Follower Spring
27—Springs
28—Orifice
29—Orifice
30—Orifice
31—Function Return Passage
32—Thermal Relief Valve
33—Directional Control Valve Port
A—Pressure Oil
B—Load Sensing Oil Pressure
C—Rockshaft Oil

Legend for Fig. 3

Litho in U.S.A.

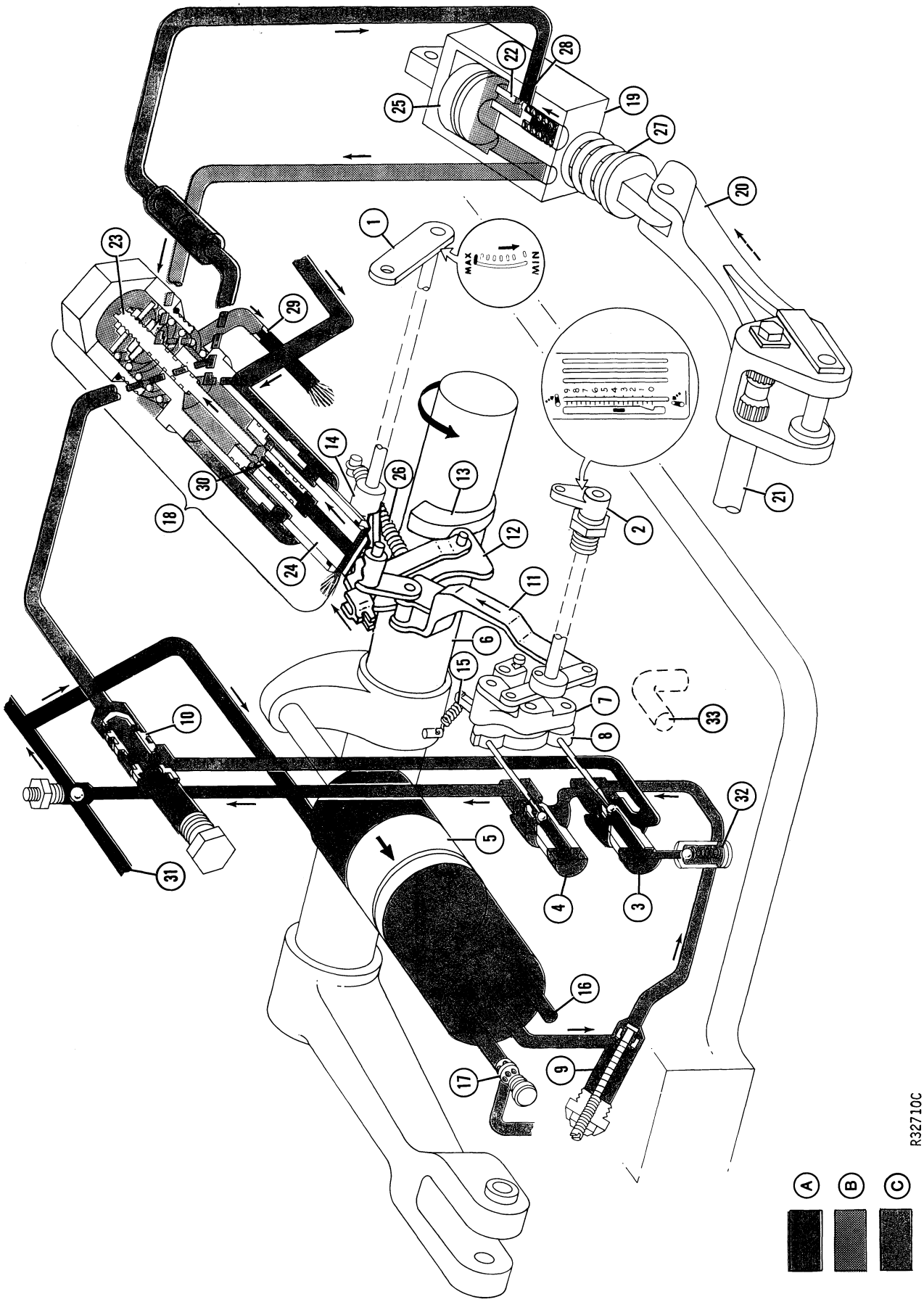

Fig. 4- "Max" Load Position - Lower

Decreasing Loads—Lower

As the load decreases, draft links and pivot arms again allow the sensing cylinder piston (25, Fig. 4) to move forward. The spring of valve (22) and oil pressure moves the valve forward to reduce the flow and lower the pressure to the front of the load control valve (23).

The load control valve spring moves the valve to the front. This allows cam follower spring (26) to pull the cam follower forward and force the piston (24) forward. Valve operating link (11) also moves forward, reducing the rotating force on the valve operating cam (8) and allowing the valve operating cam spring (15) to turn the cam counterclockwise, open the return valve (4) and lower the rockshaft. The rockshaft continues to lower until the draft load increases to the pre-set valve.

Reverse Signal Load Sensing

A load or forward force against the draft links pivot arm helps compress springs (27). Such force moves the sensing cylinder piston forward and closes valve (22) thereby reducing the pressure to the front of the load control valve from the normal reverse load signal pressure.

If the forward force against the draft links completely compresses the springs, sensing cylinder piston (25) will bottom and allow valve (22) to completely close. The pressure to the front of the load control valve will be zero. Spring (26) will then pull on cam follower (12) and push piston (24) forward until the snap ring on piston contacts the snap ring in the load control body, which serves as a mechanical stop.

Load Sensing Orifices

Because the load sensing operation is a continuous action in "Zero" or "Max" position, two passages, one at the front of the load control valve and one through the center of the valve and piston (24) allow oil to circulate through the load sensing system and return to the reservoir. These passages and associated orifices allow the sensing pressure to rapidly decrease when the draft load suddenly drops. A filtered orifice (29) in the front return passage acts with the variable orifice in valve (22) to control pressure to the front of the load control valve (23). The rear return passage is also orificed to cause a pressure drop and bleed off pressure oil acting on piston (24).

Load Sensing Variations ("Zero" to "Max")

When the load selector lever is placed at a point anywhere between "zero" and "max", the valve operating link (11) position on the cam follower (12) is changed to become more or less sensitive to the operation of the load sensing system.

Thermal Relief Valve

The thermal relief valve (32) mounted in the bottom of the rockshaft valve housing senses thermal expansion of hydraulic oil in the rockshaft system. At a preset pressure, the valve opens and returns oil directly to the reservoir.

Directional Control Valve Reservoir Return

On 8430 Tractors (T1741-) and 8630 Tractors (T2453-) port (33) provides a return to the reservoir through the rockshaft valve housing when a single-acting remote cylinder is used. See Group 10 of the Section for directional control valve operation.

In-Line Filter

On later models, a check valve and in-line filter have replaced the elbow with filter screen on the pressure line to the load sensing cylinder.

1—Load Selector Lever
2—Valve Operating Shaft
3—Pressure Valve
4—Return Valve
5—Piston
6—Rockshaft
7—Valve Operating Link
8—Valve Operating Cam
9—Throttle Valve
10—Flow Control Valve
11—Valve Operating Link
12—Servo Cam Follower
13—Servo Cam
14—Load Selector Inner Arm
15—Valve Operating Spring
16—To Lift Assist Cylinder
17—Surge Relief Valve
18—Load Sensing Valve
19—Sensing Cylinder
20—Draft Arm
21—Draft Link Pivot Shaft
22—Sensing Cylinder Valve
23—Load Control Valve
24—Load Control Piston
25—Sensing Cylinder Piston
26—Cam Follower Spring
27—Springs
28—Orifice
29—Orifice
30—Orifice
31—Function Return Passage
32—Thermal Relief Valve
33—Directional Control Valve Port
A—Pressure Oil
B—Load Sensing Oil Pressure
C—Rockshaft Oil

Legend for Fig. 4

DIAGNOSING MALFUNCTIONS

Hydraulic System Malfunctions

Rockshaft Slow, Won't Lift Rated Load or Chatter When Raising

Low oil level
Oil filter plugged
Manual bypass valve open (Early Model)
Cooler relief valve stuck open
Clutch oil pump failure
Oil transfer pump screen plugged
Steering valve leak
Pressure control valve failure
Low standby pressure
Main pump failure
Operating single acting remote cylinder
Filter relief valve stuck open

Rockshaft System Malfunctions - "Zero" Position

Incomplete Rockshaft Rotation

Control cable adjusted incorrectly

Working Depth Changes

Control lever friction adjustment too loose

Fails to Rise or Rises Slowly

Excessive load on hitch
Return valve stuck open or leaking
Flow control valve incorrectly adjusted
Rockshaft piston O-ring or seal failed
Operating linkage malfunction
Thermal relief valve leaking
Pressure valve sticking

Fails to Lower

Valve operating linkage incorrectly adjusted
Weak or broken valve operating spring
Pressure valve sticking open

Lowers Slowly

Throttle valve adjusted too near its seat
Weak or broken valve operating spring
Pressure valve leaking
Control linkage out of adjustment

Excessive Settling Under Load

Thermal relief valve leaking
Return valve leaking
Pressure valve metering shaft or guide packing wear
Relief valve leaking
Porous or failed rockshaft control valve housing or rockshaft housing
Flow control check valve leaking (engine stopped)
Rockshaft piston O-ring or seal failed
Inlet packing failure

Oil Heating—Bypassing of Oil

Valves adjusted too tight
Return valve leaking and pressure valve open or leaking
Thermal relief valve leaking
Piston O-ring or seal and pressure valve malfunction
Linkage out of adjustment
Porous valve housing

ROCKSHAFT SYSTEM MALFUNCTIONS - "MAX" POSITION

EACH MALFUNCTION LISTED MUST BE DIAGNOSED IN "MAX" SENSITIVITY. ASTERISKS (*) DENOTE THOSE ITEMS WHICH ALSO PERTAIN TO OPERATION IN "ZERO" SENSITIVITY OR, ON LATER MODELS, "MIN." SENSITIVITY.

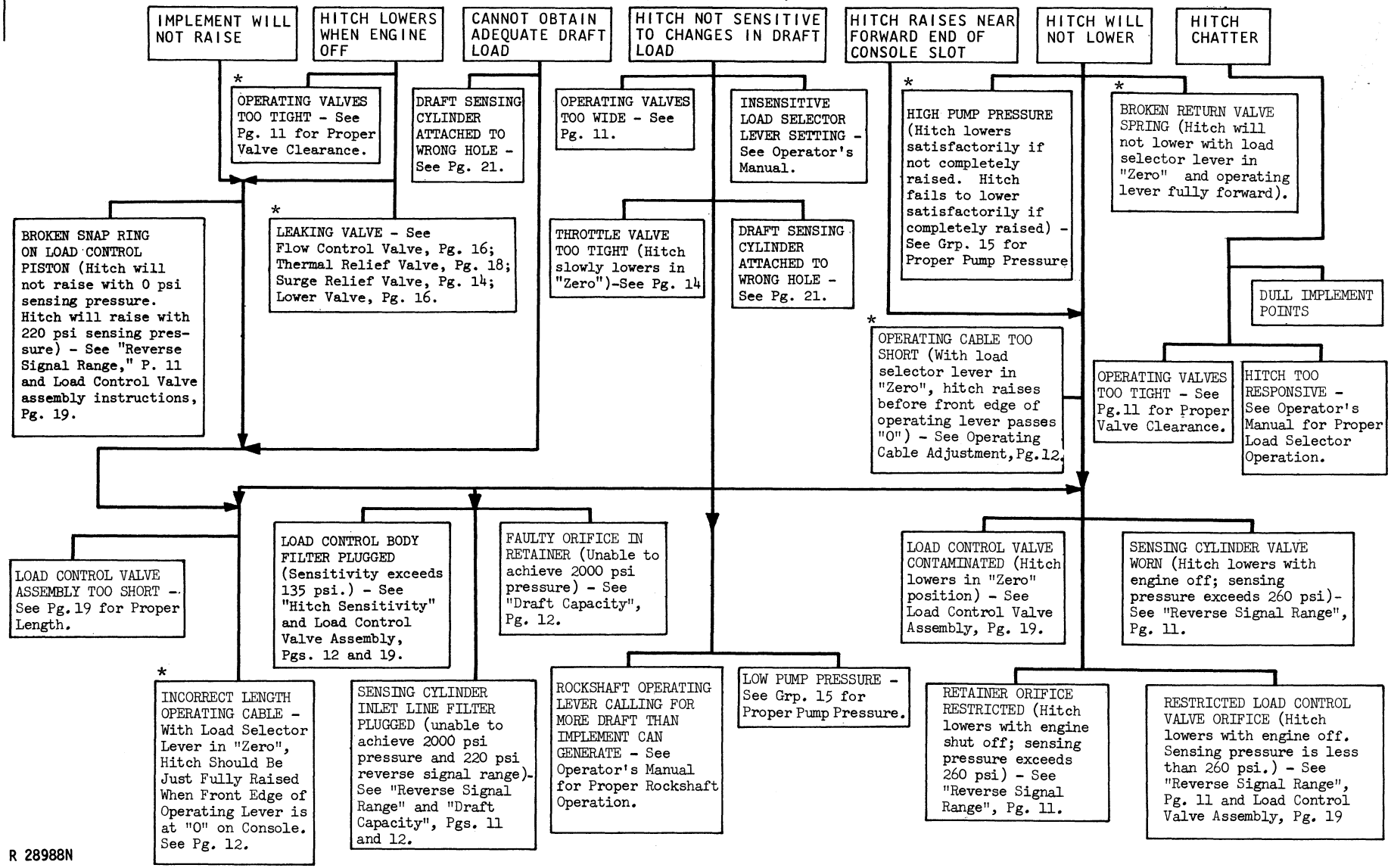

R 28988N

Fig. 5-Rockshaft System Diagnosis

Litho in U.S.A.

ROCKSHAFT TESTS

Make rockshaft time cycle test as directed in Group 6.

Flow Test

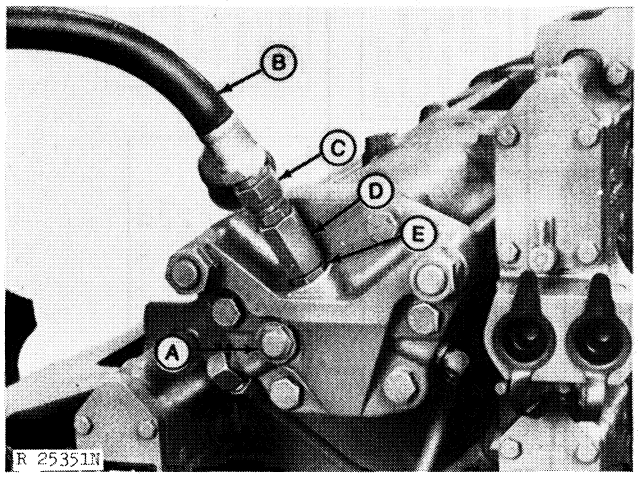

A—Rockshaft Surge Relief Valve
B—Test Unit Inlet Hose
C—*0760 (Y3005)
D—*6725 (Y3007)
E—R27270

Fig. 6-Rockshaft Flow Test Connections

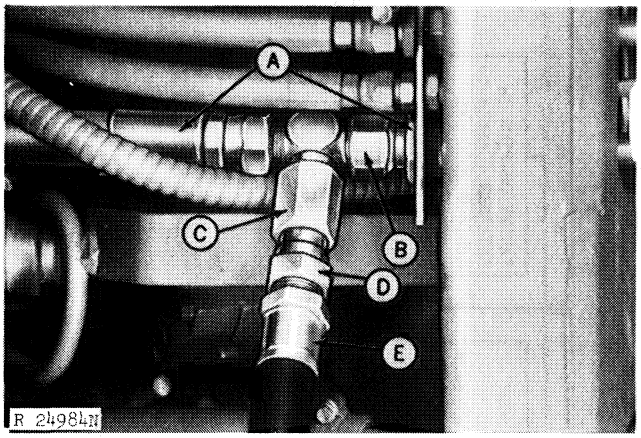

A—Return Oil Filter Relief Valve Housing-to-Main Pump Line
B—D-92 Tee* (0766)
C—*0757 (Y3001)
D—*0760 (Y3005)
E—Test Unit Outlet Hose

Fig. 7-Test Unit Outlet Test Connection

Relieve hydraulic pressure. Remove top left-hand piston cover cap screw (cover should not leak, if other piston cover cap screws are tight) and throttle valve. Install test unit inlet hose as shown in Fig. 6.

The test unit outlet hose can be connected as in Fig. 7, or installed into the right-hand coupler of the selective control valve using special fittings; 0714, 0760, 0761, and 0092. If installed in SCV, the appropriate selective control valve lever must be moved to the rear.

Run the engine at 2000 rpm and move the rockshaft console lever rearward. Close test unit control valve until a 1500 psi (103.4 bar) reading is obtained. Flow through the test unit should be 15.5 to 16.5 gpm (0.98 L/s to 1.04 L/s) on 8630 Tractors. On 8430 Tractors flow should be 14 to 15 gpm (0.88 to 0.95 L/s). See Diagnosing malfunctions if specifications are not met.

Disconnect test unit and install throttle valve and cap screw. Install filter relief valve housing outlet line.

Rockshaft Surge Relief Valve Test

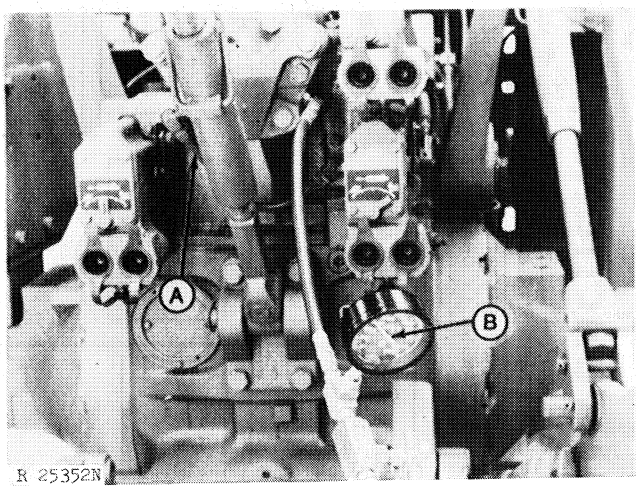

A—Surge Relief Valve Return Line
B—Test Unit

Fig. 8-Rockshaft Surge Relief Valve Test

Remove rockshaft assist cylinder line at rockshaft piston cover.

Connect a 0-5000 psi (0-350 Bar) (0-343 kg/cm²) pressure gauge and needle valve from JDH 48 Rockshaft Thermal Relief Valve Test Kit (B, Fig. 8). Use a 90° elbow, special fitting and high pressure hose from the JDH 43A-1 Supplemental Kit. Connect a hand pump to needle valve.

Apply pressure with hand pump. Gauge pressure reading should reach 2650 to 3000 psi (182.7 to 206.8 Bar), then rapidly decrease, indicating that valve has opened. Perform test several times to insure that valve is closing and opening properly.

Service valve as necessary.

*Fittings are found in the D-15022NU Master Hydraulic Fitting Flow Test Kit.

Rockshaft Thermal Relief Valve Test

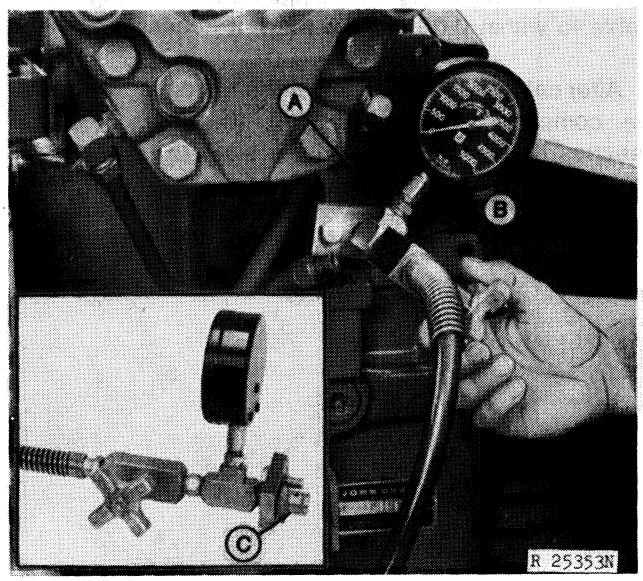

A—Return Valve Bore **C—Special Fitting**
B—JDH-43 Test Kit

Fig. 9-Rockshaft Thermal Relief Valve Test

Relieve hydraulic pressure and remove rockshaft valve housing cover. Carefully remove O-rings, packings, and pressure and return valve assemblies.

Install JDH-43 Rockshaft Thermal Relief Valve Test Kit (B, Fig. 9) in pressure valve bore as shown in Fig. 9. Connect hand pump to test kit needle valve.

NOTE: Always use clean John Deere Hy-Gard Transmission and Hydraulic Oil in hand pump.

Apply pressure with hand pump. Gauge pressure reading should reach 3550 to 3950 psi (244.8 to 272.4 Bar) then **rapidly** decrease, indicating that valve has opened. Perform test several times to be sure that valve is closing and opening properly.

Service the thermal relief valve if specifications are not met.

Rockshaft Operating Adjustment Checks

Make the following checks and adjustments in sequence and without implement on hitch to determine proper rockshaft operation.

Load Selector Lever Travel

With the engine off and the rockshaft lowered, move the console load selector knob from "zero" to "max" position. The load selector lever on the rockshaft valve housing should reach either end of its travel before the console knob reaches either end of the slot. Adjust cable swivel at the valve housing, if necessary.

Rockshaft Operating Valve Clearance

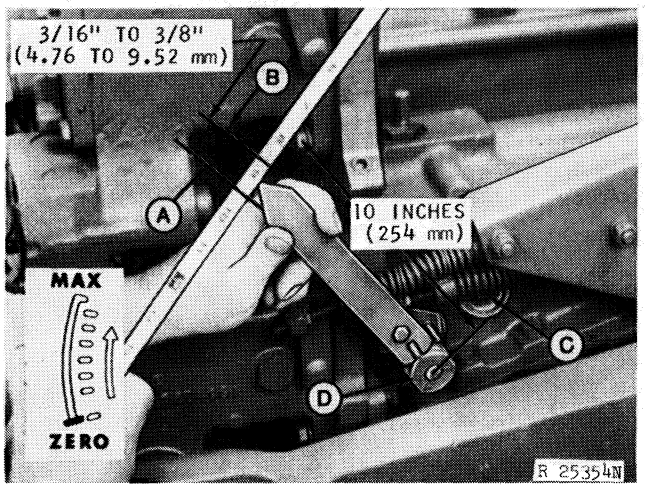

A—Starts to Lower **C—Valve Adjusting Screw**
B—Starts to Raise **D—Operating Arm**

Fig. 10-Rockshaft Operating Valve Adjustment Check

Place the console load selector knob in "zero" position.

Disconnect the rockshaft valve operating arm cable. Extend the arm 10 inches (254 mm) from the center of the valve operating shaft (D).

Operate the engine at 1200 rpm. Operate the rockshaft at the extended arm. At the ten-inch point, measure the distance the arm is moved to change rockshaft rotation direction (A or B). The distance should be 3/16 to 3/8 inch (4.762 to 9.525 mm).

If necessary, remove plug in side of valve housing and turn adjusting screw (C, Fig. 10) counterclockwise to increase the distance or clockwise to reduce distance.

Reverse Signal Load Sensing Check

Install 0-5000 psi (0-350 Bar) pressure gauge and needle valve from JDH-43 Rockshaft Thermal Relief Valve Test Kit as shown in Fig. 11. Be sure that pressure gauge is installed between load control valve retainer (A) and needle valve.

Open the needle valve completely.

Operate the engine at 1200 rpm. The pressure gauge should read 180 to 260 psi (12.41 to 17.92 Bar). See Diagnosing Malfunctions if specifications are not met.

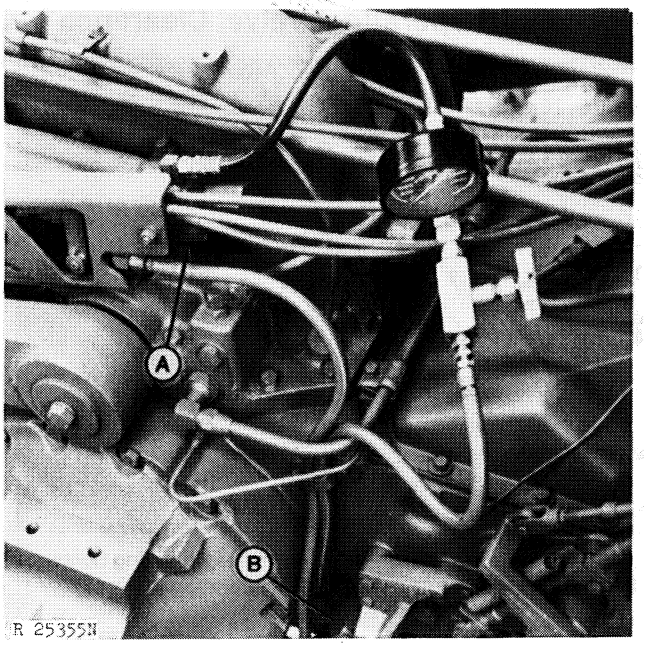

A—Load Control Valve Retainer **B—Load Sensing Cylinder**

Fig. 11-Rockshaft Load Sensing Check

Rockshaft Operating Valve Cable Adjustment

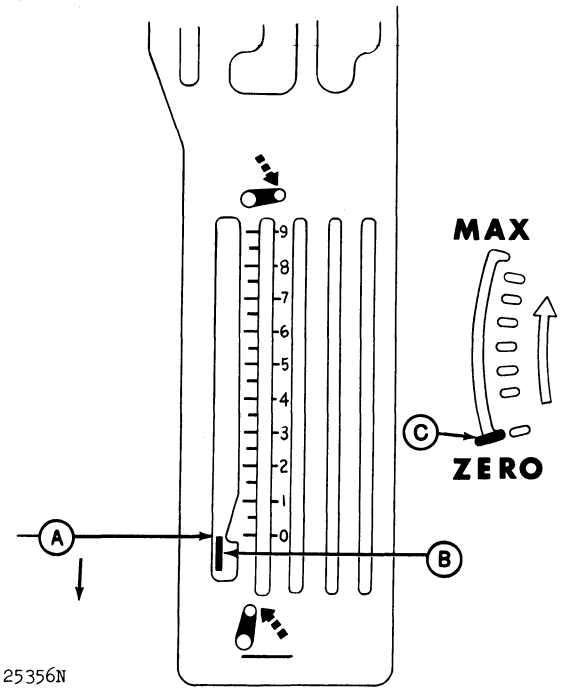

A—Rockshaft Just Fully Raised **B—Rockshaft Console Lever** **C—Load Selector Lever**

Fig. 12-Rockshaft Console Lever Position

The load selector console knob (C, Fig. 12) should be in "zero" position.

Operate the engine at 1200 rpm. Slowly raise the rockshaft. Check that the rockshaft is just fully raised when the front edge of the console lever (B) is aligned with "O" to within 0.12 in. (3 mm) on the console guide (A, Fig. 12). Adjust the operating valve cable to within 0.06 in. (1.5 mm), if necessary.

After cable is adjusted, lower the rockshaft. It should be completely lowered before the console lever reaches the front of the console slot.

Load Capacity Check

Fig. 13-Load Capacity Test Block Installed

Place load selector console knob in full "max" position.

With engine off, install JDH-44 Test Block as shown in Fig. 13. Wedge block tightly in place.

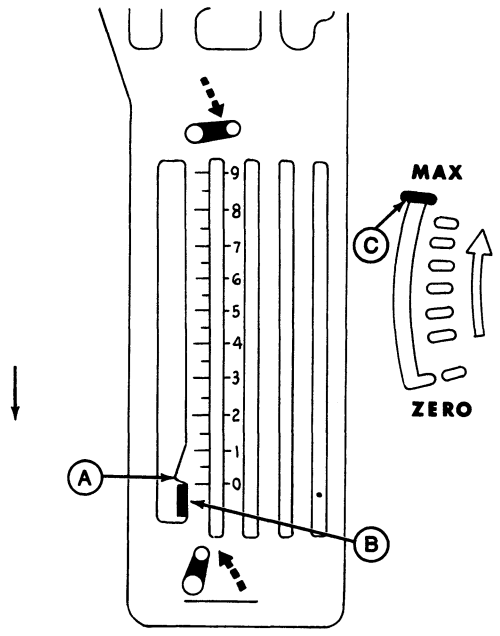

A—Rockshaft Fully Raised Before This Point **B—Rockshaft Console Lever** **C—Load Selector Lever**

Fig. 14-Console Lever Position-Load Capacity

Completely close the needle valve that was previously installed (Fig. 11). Operate the engine at 1200 rpm and raise the rockshaft. The rockshaft should be fully raised before the console lever B falls into the stop on the console guide (A, Fig. 14).

Place console lever fully forward in console slot. Slowly open valve until rockshaft begins to rise. The rockshaft should rise when the pressure gauge (Fig. 11) reads 1600 to 2000 psi (110.3 to 137.9 bar).

If a raise is not obtained as stated above, move the front edge of the console lever to the "8-1/2" mark on the console. Repeat test as instructed above. A raise with the lever at this position is acceptable.

If specifications were not met, check the following:

a. Load control valve spring
b. Load control valve binding or sticking
c. Overall load control valve length adjustment

Rockshaft Sensitivity

The load selector console knob should be in full "max" position.

Close needle valve and place the front edge of the console lever at "4" position on the console guide.

Operate engine at 1200 rpm and slowly open valve. Note the pressure gauge reading when the rockshaft JUST begins to rise. Slowly close the valve and note the pressure gauge reading when the rockshaft JUST begins to lower. The difference in the two pressure readings should be less than 135 psi (9.3 bar).

If specification was not met, check for linkage binding in the control valve housing or a sticky load control valve. Recheck rockshaft control valve adjustment.

Load Control Valve Adjustment Check

With the load selector console knob in full "max" position, raise the rockshaft. With the engine off the rockshaft should not fall.

ROCKSHAFT

Removal

Relieve hydraulic pressure and disconnect hydraulic pressure and return lines.

Disconnect center link, lift links and rockshaft assist cylinder at the rockshaft.

Remove shields and control cables from rockshaft and selective control valves. Remove rockshaft tie rods and remove rockshaft assembly from transmission case.

Disassembly and Inspection

Remove selective control valves and rockshaft control valve housing.

Remove piston cover (Fig. 15). Disassemble throttle valve and surge relief valve.

Check throttle valve parts for damage. Check spring for compression rate of 0.75 inch at 0.5 to 0.7 lbs. (19 mm at 2.2 to 3.1 N). Check throttle valve shaft and valve to be sure that both move freely in the bore. Check O-ring and backup ring for damage.

Examine surge relief valve poppet, body and spring for damage, burrs or contaminents. Spring should compress to 1.114 inches at 130 to 150 lbs. (28.29 mm at 578 to 667 N).

NOTE: Both throttle valve and surge relief valve can be examined and adjusted with the rockshaft on the tractor. Adjust throttle valve to desired rate-of-drop by loosening lock nut and turning throttle valve shaft screw. Adjust surge relief valve by adding or subtracting shims.

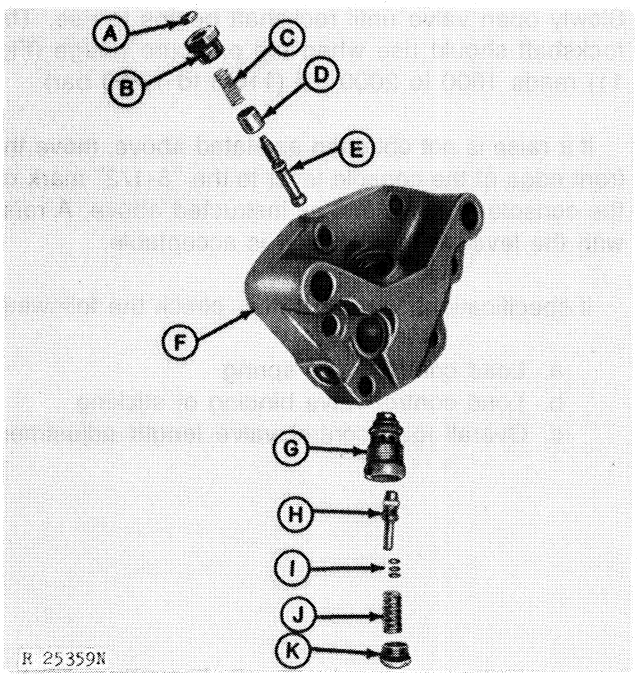

A—Jam Nut
B—Special Bushing
C—Spring
D—Throttle Valve
E—Throttle Valve Shaft
F—Piston Cover
G—Body
H—Relief Poppet
I—Shims
J—Spring
K—Cap

Fig. 15-Rockshaft Piston Cover

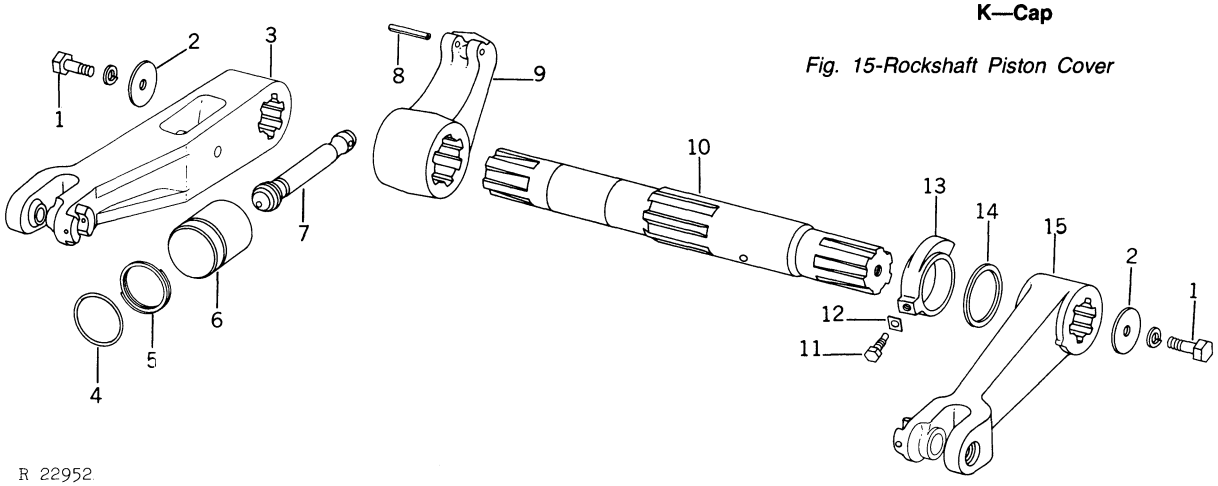

1—Cap Screw (2 used)
2—Washer (2 used)
3—L.H. Lift Arm
4—O-Ring*
5—Backup Ring*
6—Piston
7—Rod
8—Spring Pin
9—Arm
10—Rockshaft
11—Cap Screw
12—Lock Plate
13—Servo Cam
14—Spacer (2 used)
15—R.H. Lift Arm
***Out of Use, replaced by packing and sealing ring**

Fig. 16-Rockshaft Assembly

With a short jerking motion, rotate lift arms to the lowered position to force piston (6, Fig. 16) from cylinder.

Remove lift arms, servo cam (13, Fig. 16), and bottom cover.

Check piston and cylinder for scoring and damage. Piston O.D. is 4.3710 to 4.3730 inches (111.023 to 111.074 mm). Cylinder I.D. is 4.3735 to 4.3765 inches (111.086 to 111.163 mm).

Examine rockshaft and rockshaft bushings for excessive wear or damage. The O.D. of the left-hand end of the rockshaft is 3.2470 to 3.2490 inch (82.474 to 82.525 mm). Right-hand rockshaft end O.D. is 3.6220 to 3.6240 inches (91.999 to 92.024 mm). Right-hand bushing I.D. is 3.6265 to 3.6315 inches (93.129 to 93.240 mm). Left-hand bushing I.D. is 3.2515 to 3.2565 inches (82.588 to 82.714 mm).

Use Nos. 27535 and 27537 of D-01045AA (No. 27797) Bushing Driver Set to install the left-hand bushing. Use Nos. 27543 and 27541 of the same set to install the right-hand bushing. Be sure that oil holes in bushings align with oil passages in housing.

Check oil seals in rockshaft housing. If necessary, replace, using Nos. 27551 and 27534 of D-01045AA (No. 27797) Bushing Driver Set. Drive flush with housing bore.

Assembly

Lubricate all parts, O-rings, and packings in clean John Deere Hy-Gard Transmission and Hydraulic Oil.

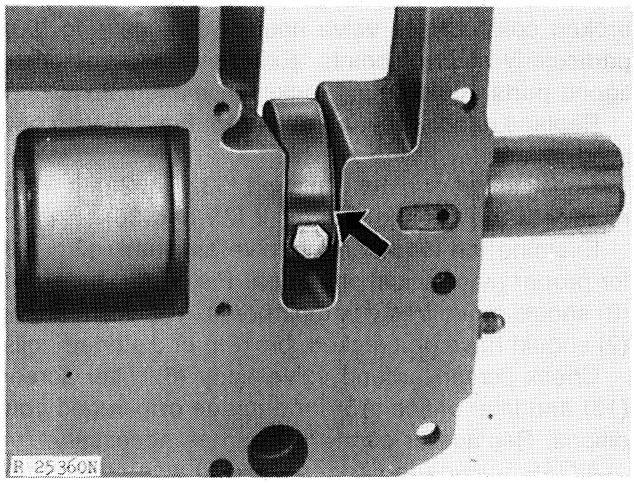

Fig. 17-Installation of Spacer

Install rockshaft, cam, and crank arm. Be sure to align index marks.

Add as many spacers (Fig. 17) as will freely assemble between the cam and right-hand side of housing to eliminate excessive rockshaft end play. Tighten cam to rockshaft.

Install bottom cover.

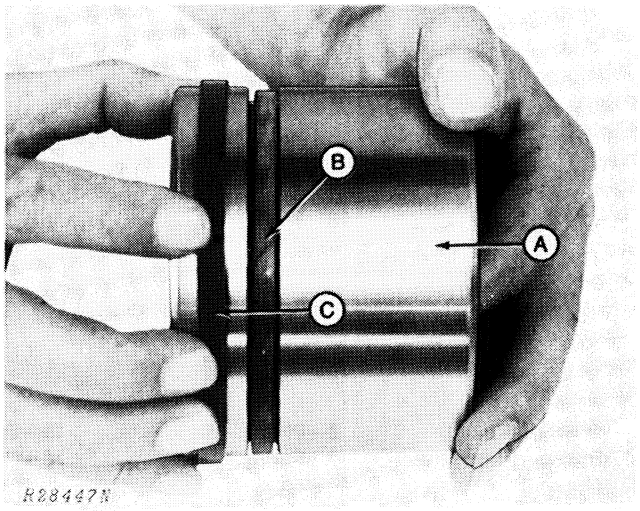

A—Rockshaft Piston B—Packing C—Slipper Seal

Fig. 18-Installing Slipper Seal

O-ring (4, Fig. 16) and backup ring (5) have been replaced with a square rubber packing (B, Fig. 18) and a teflon sealing ring (C). Lubricate piston, packing and sealing ring. Install packing into piston groove with the sealing ring over the packing.

Carefully force piston into rockshaft piston cylinder. Install piston cover with valves and tighten cap screws to 170 ft-lbs (230 Nm).

Install rockshaft valve housing.

Install right and left-hand lift arms. Be sure to index lift arms with rockshaft. Tighten cap screws to 300 ft-lbs (407 Nm). Strike lift arm with hammer and retighten to 270 to 330 ft-lbs (366 to 447 Nm).

ROCKSHAFT VALVE HOUSING

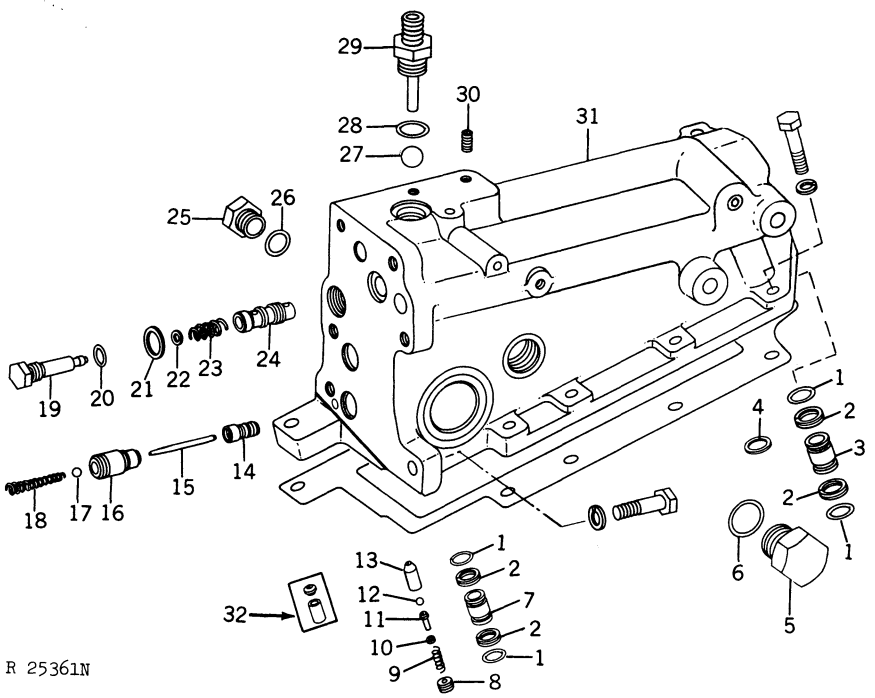

1—O-Ring (4 used)	8—Plug	15—Shaft (2 used)	22—Shim	29—Plug
2—Backup Ring (4 used)	9—Spring	16—Control Valve (2 used)	23—Spring	30—Plug
3—Inlet	10—Shim	17—Ball (2 used)	24—Flow Control Valve	31—Valve Housing
4—Sealing Ring	11—Guide	18—Spring (2 used)	25—Plug	32—Thermal Relief Valve Seat**
5—Plug	12—Ball	19—Plug	26—O-Ring	*Early Model
6—O-Ring	13—Thermal Relief Valve Seat*	20—O-Ring	27—Ball	**Later Model
7—Inlet	14—Guide (2 used)	21—Packing	28—O-Ring	

Fig. 19-Rockshaft Valve Housing

Repair

IMPORTANT: Repairs to rockshaft valve housing parts, particularly the load control valve assembly, must be performed in a clean, well-lighted environment, preferably a separate area that can be isolated from the general shop area.

Disassemble valve housing, identifying parts for inspection and reassembly. (See Fig. 19.)

Examine seats and bores in valve housing for scoring or damage. If valve bores are damaged, replace housing. Lap seats as necessary.

Check flow control valve (24, Fig. 19), control valves (16), and metering shafts (15) for damage. If rockshaft raise cycle hesitation with cold oil is a problem, replace metering shafts (15) with later models that have a longer taper on the ends.

Control valves (16) can be lapped. Insert dowel in valve, apply lapping compound to valve and turn valve in valve housing valve bore.

Check thermal relief valve spring (9), guide (11), ball (12), and seat (13) for damage. 8430 Tractors (T1744-) and 8630 Tractors (T2454-) are equipped with a two-piece thermal relief valve seat. The one-piece seat (13) should be replaced by the later model seat on tractors prior to the above serial numbers, whenever rockshaft valve housing is disassembled.

Inspect valve operating springs (18, Fig. 19) for broken coils. Check valve housing linkage (Fig. 20), particularly at pivot points. Excessive wear or misaligned parts could cause rockshaft malfunctions.

Replace needle bearing roller (15, Fig. 20) with new solid roller.

Check for wear of hole in shaft (33, Fig. 20). If worn, replace with new shaft and link (35 and 36).

Examine the load control valve assembly (Fig. 23) for proper mechanical operation. Piston (2) and valve (3) should move freely in their bores. The valve spring (9) should have no cracked, broken, or distorted coils.

Check screen around valve body (6), filter screen (13) and filter orifice (15) for damage or plugged conditions. Replace or carefully clean as necessary.

NOTE: Orifice in filter orifice (15) was changed to steel on later models. Replace plastic orifice with new steel orifice on early models.

NOTE: Valve body, valve, piston, and spring can only be replaced as an assembly.

Use the following specifications as reference:

Item	Specification
Flow control valve O.D.	0.6530 to 0.6534 in. (16.586 to 16.596 mm)
Flow control valve bore I.D.	0.6539 to 0.6549 in. (16.609 to 16.634 mm)
Control valve O.D.	0.7480 to 0.7490 in. (18.999 to 19.024 mm)
Control valve bore I.D.	0.7500 to 0.7520 in. (19.050 to 19.101 mm)
Load control valve piston O.D.	0.6247 to 0.6253 in. (15.867 to 15.882 mm)
Load control valve O.D.	0.2503 to 0.2509 in. (6.3855 to 6.3728 mm)
Load control valve body I.D. at piston	0.6257 to 0.6263 in. (15.892 to 15.908 mm)
Load control valve body I.D. at valve	0.2514 to 0.2524 in. (6.3855 to 6.4109 mm)
Load control valve body O.D.	0.8720 to 0.8730 in. (22.148 to 22.174 mm)

Spring Specifications

Flow control valve compressed to	0.90 in. at 12.6 to 15.4 lbs. (22.86 mm at 56 to 68.5 N)
Control valve compressed to	1.42 in. at 7.0 to 9.0 lbs. (36.1 mm at 31.1 to 40.0 N)
Thermal relief valve compressed to	0.45 in. at 12.3 to 15.3 lbs. (11.4 mm at 54.7 to 68.06 N)
Valve cam operating extended to	3.35 in. at 32.5 to 39.5 lbs. (85.1 mm at 144.6 to 75.7 N)
Cam follower return extended to	3.35 in. at 32.5 to 39.5 lbs. (85.1 mm at 144.6 to 175.7 N)
Load control valve compressed to	1.62 in. at 88.2 to 107.8 lbs. (41.1 mm at 392 to 479.5 N)

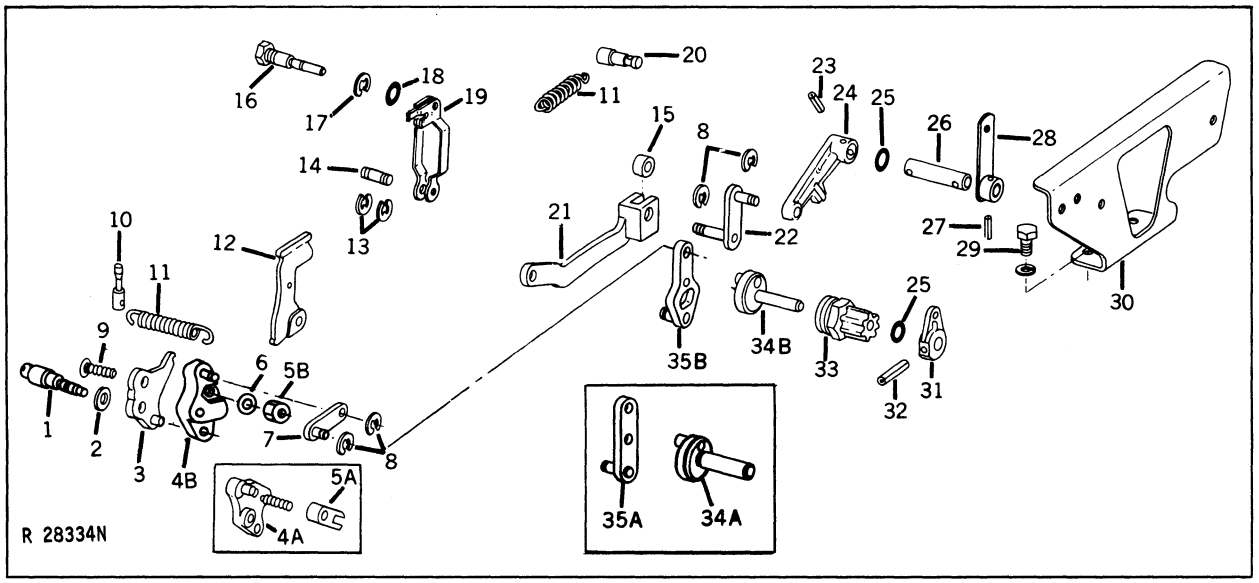

1 —Valve Cam Shaft
2 —Washer
3 —Valve Operating Cam
4A—Cam Adjusting Link
4B—Cam Adjusting Link***
5A—Special Nut
5B—Special Nut***
6 —Spring Washer
7 —Link with Pin
8 —Retaining Ring (4 used)
9 —Adjusting Screw
10—Pin
11—Spring (2 used)
12—Servo Cam Follower
13—Retaining Ring (2 used)
14—Pin
15—Needle Bearing
16—Special Plug
17—Retaining Ring
18—O-Ring
19—Link
20—Pin
21—Valve Operating Link
22—Load Selector Control Link
23—Spring Pin
24—Load Selector Control Arm
25—O-Ring (2 used)
26—Shaft
27—Spring Pin
28—Lower Load Selector Lever
29—Cap Screw (4 used)
30—Bracket
31 —Lower Valve Operating Arm
32 —Spring Pin
33 —Quill
34A—Shaft*
34B—Shaft**
35A—Operating Link*
35B—Operating Link**
***8430 (-T1046)**
8630 (-T1067)
****8430 (T1047-)**
8630 (T1068-)
*****8430 (T4669-)**
8630 (T6475-)

Fig. 20-Rockshaft Valve Linkage

Valve Assembly

Lubricate all parts, O-rings, and packings in clean John Deere Hy-Gard Transmission and Hydraulic Oil.

Install new thermal relief valve assembly with proper number of shims. Test as directed on page 30-11.

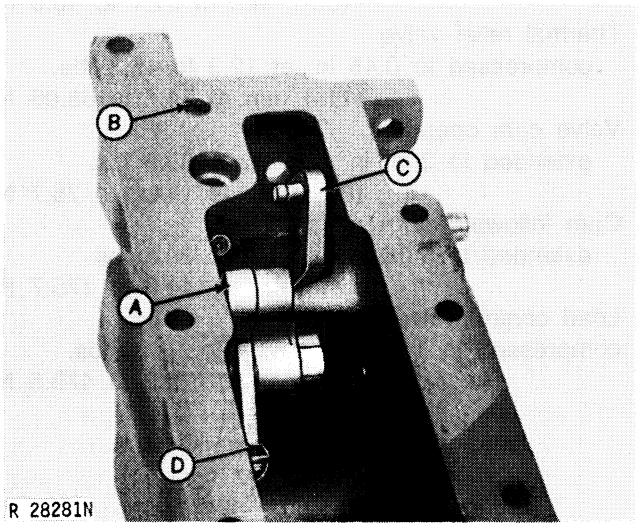

A—Valve Operating Cam
B—Thermal Relief Valve Plug
C—Operating Link
D—Spring

Fig. 21-Operating Cam Installed

Install operating link (35, Fig. 20), shaft (34), quill (33), O-ring (24) and lower operating arm. Be sure that pin is in proper hole.

Install lower arm with spring pin so rockshaft linkage attaching point is up. Tighten quill (32) to 100 ft-lbs (136 Nm) torque.

Install guides (14, Fig. 19). Assemble valve operating cam (items 2 through 9, Fig. 19). When assembling be sure that there is no more than .045 inch (1.14 mm) between the cam adjusting link (4) and special nut (5). Place this assembly in housing and secure to operating link.

Move valve operating cam into position and tighten valve cam shaft (1, Fig. 20) to 12 ft-lbs (16 Nm). Hook spring (11) to valve operating cam.

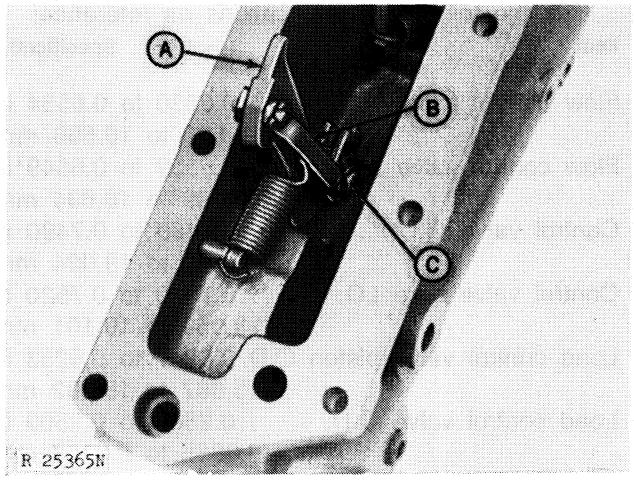

A—Servo Cam Follower
B—Link
C—Special Plug

Fig. 22-Servo Cam Follower Installed

Install special plug (16, Fig. 20). Assemble servo cam follower (12) and link (19) and install on plug (Fig. 23). Install spring (11) to follower.

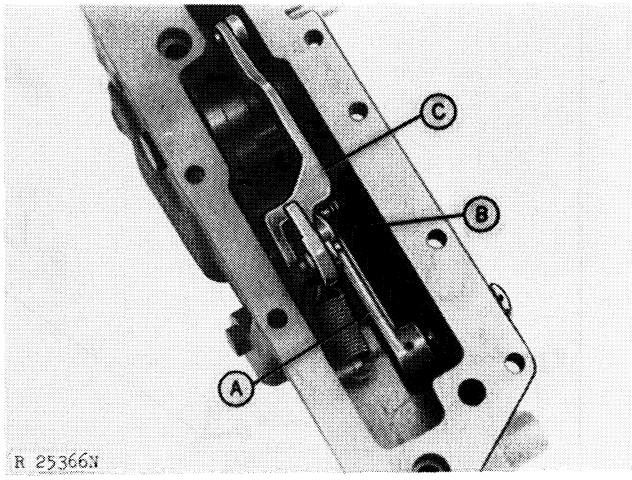

A—Load Selector Control Arm
B—Link
C—Valve Operating Link

Fig. 23-Load Selector Linkage Installed

Slide shaft (26, Fig. 20) in housing and attach load selector control arm (24), link (22) and valve operating link (21). Attach other end of link (21) to operating link (35).

With cable attaching point up, install lower load selector lever (28) to shaft (26).

Work parts in housing to be sure that there is no binding or sticking.

LOAD CONTROL VALVE

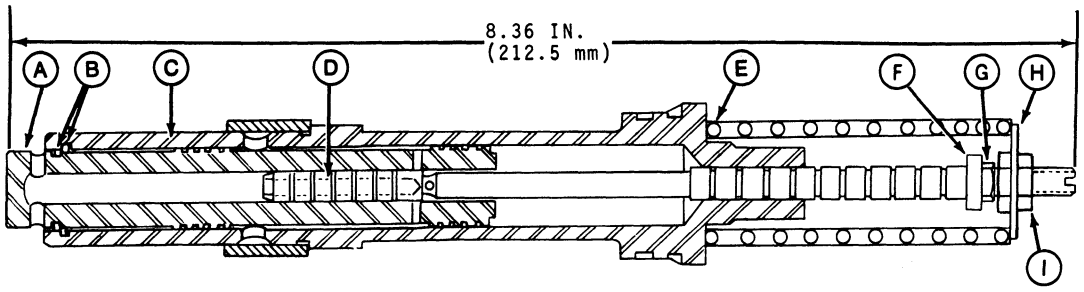

R31600

A—Load Control Valve Piston
B—Snap Ring (2 used)
C—Load Control Valve Body
D—Load Control Valve
E—Spring
F—Stop
G—Lock Nut
H—Retainer
I —Jam Nut

Fig. 24-Load Control Valve Cut-Away (Late Model)

Remove special plug (F, Fig. 25) from retainer (D) on control valve housing. Remove retainer from housing and load control valve (A).

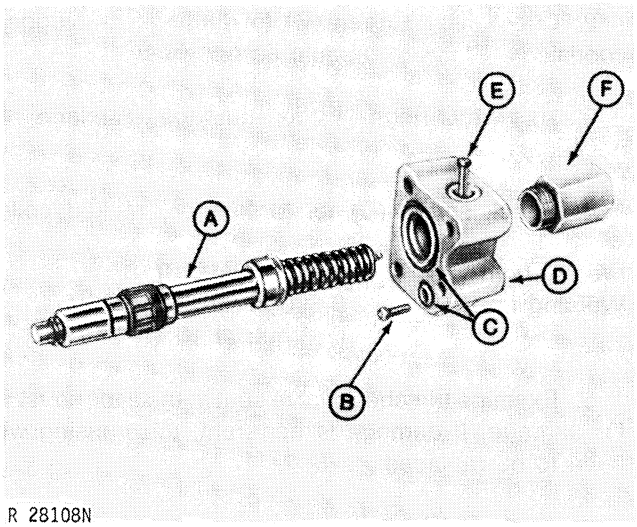

R 28108N

A—Load Control Valve Assembly
B—Filter Orifice
C—O-Rings
D—Retainer
E—Filter
F—Special Plug

Fig. 25-Load Control Valve and Retainer

NOTE: The load control valve (A, Fig. 25) comes complete and preadjusted as a parts item. The body, piston, and valve are a matched set and must be replaced as a unit.

Examine the load control valve assembly for proper mechanical operation. Piston and valve should move freely in their bores.

Check spring for broken or cracked coils.

Inspect screen around valve body, filter screen (E, Fig. 25), and filter orifice (B) for damage or plugged conditions. Replace or carefully clean as necessary.

Overall length of the load control valve is 8.36 inches (212.5 mm). Be sure to have some force against the piston, when measuring, to insure contact of the snap rings. (See Fig. 24).

If adjustment is required, adjust retainer (H, Fig. 24) to obtain the specified length. Torque jam nut (I) against retainer to 45 in-lbs (5 Nm) (0.5 kgm). Early model tractors had a large flat washer retained by two nuts in place of retainer (H) and jam nut (I).

If mechanical stop (F) has been removed, torque lock nut (G) to 40 in-lbs (4.5 Nm) (0.46 kgm).

NOTE: DO NOT adjust load control valve unless absolutely necessary.

Rockshaft Valve Housing Installation

Install inlets (3 and 7, Fig. 19) in rockshaft housing. Carefully secure valve housing to rockshaft housing. Avoid damaging inlets.

Install metering shafts (15, Fig. 19), valves (16), balls (17), and springs (18) into valve housing. Install flow control valve (24), spring (23), and proper number of shims (22). Install valve housing cover.

Install rockshaft assembly on transmission case and tighten cap screws to 85 ft-lbs (115 Nm) torque.

Rockshaft Operating Lever and Cables

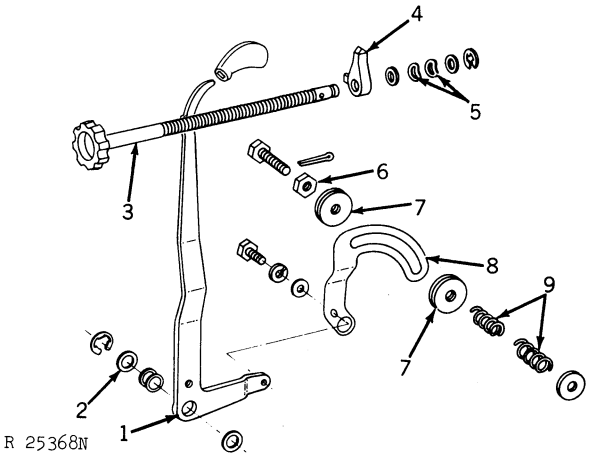

1—Console Lever
2—Washer (4 used)
3—Adjusting Screw
4—Lever Stop
5—Spring Washers
6—Jam Nut
7—Faced Washer
8—Friction Plate
9—Springs

Fig. 26-Rockshaft Console Lever

Check rockshaft operating cables, load selector lever, and console lever for excessive wear or looseness of fit.

Check friction plate and washers for wear. When installed, friction device should require 4 to 5 lbs. (17 to 22 N) of force to move lever.

See "Adjustments" on 30-10 for correct lever position.

In-Line Filter

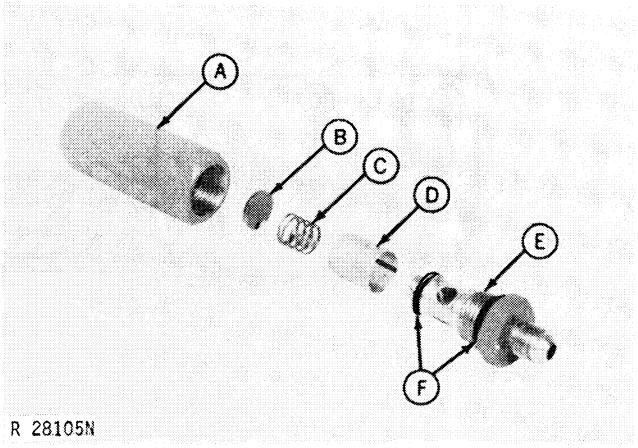

A—Housing with Seat
B—Check Valve
C—Spring
D—Screen
E—Special Connector
F—O-Rings

Fig. 27-In-Line Filter Assembly

1. Remove in-line filter (A, Fig. 27) from rockshaft control valve housing. The filter is located on the front right-hand side of the housing.

2. Check filter screen (D) for damage or plugged conditions. Clean or replace as necessary.

3. Inspect O-rings (F) for damage. Replace as necessary.

4. Check spring (C) for broken or cracked coils.

Free Length	0.480 in. (12.19 mm)
Working Load	0.300 in. at 2.81-2.87 lbs. (7.6 mm at 12.45-12.77 N)

5. Examine the check valve seat in the filter housing for damage. If damage is apparent, the housing will have to be replaced.

6. Reassemble filter using new O-rings. Be sure only one check valve disk (B) is installed. Install assembly on control valve housing with fitting pointing forward and filter housing horizontal.

LOAD SENSING CYLINDER, PIVOT SHAFT AND PIVOT ARMS

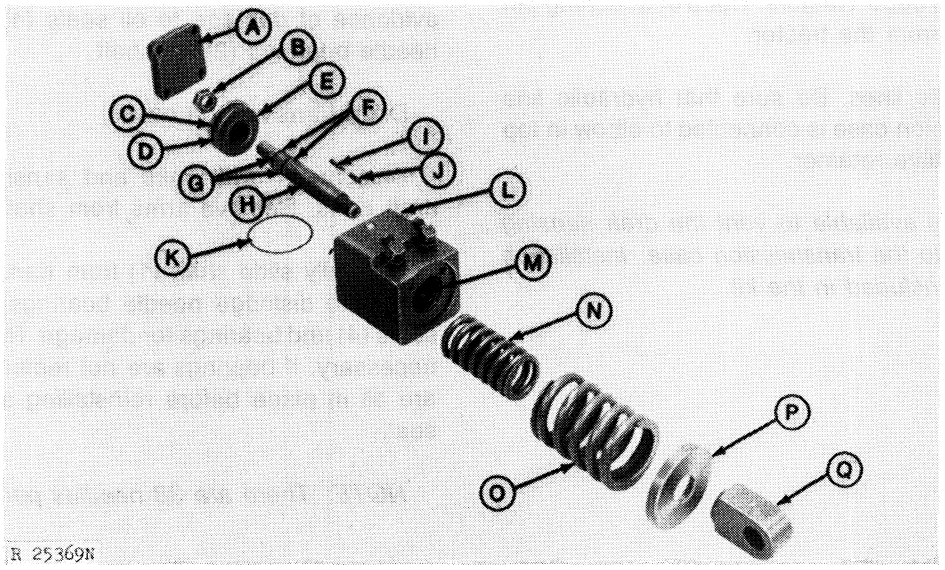

A—Cylinder End
B—Piston Rod Nut
C—Backup Ring*
D—O-Ring*
E—Piston
F—Backup Rings
G—O-Rings
H—Rod
I —Valve
J—Spring
K—O-Ring Packing
L—Cylinder
M—Oil Seal
N—Inner Spring
O—Outer Spring
P—Retainer
Q—Rod End
*** —Out of use, replaced by oil seal**

Fig. 28-Load Sensing Cylinder

Load Sensing Cylinder Repair

If necessary, relieve hydraulic pressure and disconnect hydraulic lines from sensing cylinder.

Disconnect cylinder from bracket and pivot arm.

CAUTION: With draft links attached, pivot arms will rotate upward. With draft links off, pivot arms will rotate downward.

Disassemble sensing cylinder. (Fig. 28).

Check for scored or damaged piston (E), piston rod (H), or cylinder (L).

Examine sensing cylinder valve spring (J). Be sure that valve operates freely in its bore. Spring should compress to 0.65 inch at 2.5 to 3.1 lbs. (16.5 mm at 11.1 to 13.8 N).

Check cylinder rod springs for signs of stress, cracked or broken coils. Inner spring should compress to 2.70 inches at 324 to 396 lbs. (52.4 mm at 1441 to 1761 N). Outer spring should compress to 2.70 inches at 486 to 594 lbs. (52.4 mm at 2162 to 2651 N).

*Check oil seal (M), O-rings and backup rings for damage. Replace as necessary. Examine piston O-ring (D) and backup ring (C) for damage. On 8630 Tractors (T8865-) and 8430 Tractors (T6493-) O-ring (D) and backup ring (C) were replaced with an oil seal. Examine and replace as necessary.

Assembly

Lubricate all parts, oil seal, packing, and O-rings in clean John Deere Hy-Gard Transmission and Hydraulic Oil.

Install oil seal (M) in cylinder (L) with lip of seal to the outside of the cylinder. Locate seal flush with cylinder surface.

Install valve spring (J) and valve (I) in correct bore in cylinder. Install valve with open end up.

*Install oil seal on piston (E) and O-rings and backup rings on rod (H). Install oil seal with lip toward bore in sensing cylinder. A compression tool may be required when installing piston into cylinder.

Carefully slide rod through cylinder.

Install springs (N and O), retainer (P), and rod end (Q). Tighten piston rod nut and rod end to 185 ft-lbs (251 Nm).

Install packing O-ring and cylinder end. Tighten cap screws to 35 ft-lbs (47 Nm).

Install cylinder on bracket. Attach rod end to "II" hole (9, Fig. 29) in draft arm on 8430 Tractors or to "III" hole (8) in draft arm on 8630 Tractors. Head of attaching pin should be away from the tractor.

Attach hydraulic lines. Be sure that hydraulic line nearest transmission case is connected to elbow in top of load control valve retainer.

NOTE: A kit is available to vent the draft sensing cylinder directly to the transmission case. Installation instructions are included in the kit.

Pivot Shaft and Arms

Remove draft shaft (1, Fig. 29) only if there is evidence of damage to oil seals (4), snap rings (3), needle bearings (2), or shaft.

Drain transmission case.

Disconnect draft links and sensing cylinder from draft arms. Remove arms from shaft.

Carefully slide shaft (1) from transmission case so as not to dislodge needle bearings (2). Examine oil seals (4) and bearings for damage. Replace bearings if necessary. If bearings are not replaced, be sure they are all in place before reinstalling shaft. Replace oil seal.

NOTE: There are 38 needles per bearing.

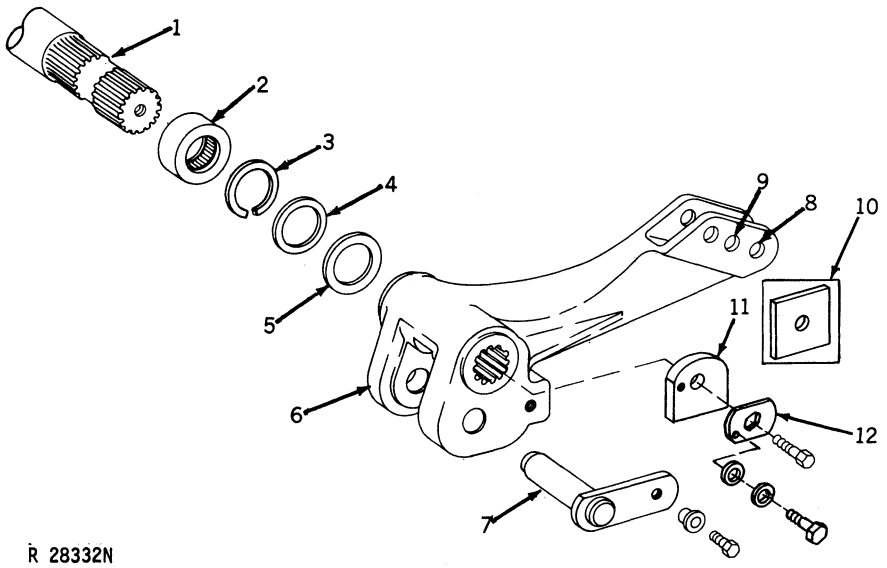

1—Draft Shaft
2—Needle Bearings
3—Snap Ring
4—Oil Seal
5—Washer
6—Draft Arm
7—Pin with Handle
8—Hole "III"
9—Hole "II"
10—Brace (Early Models)
11—Retainer
12—Retainer

Fig. 29-Pivot Shaft and Arm

Draft Shaft and Arms—Continued

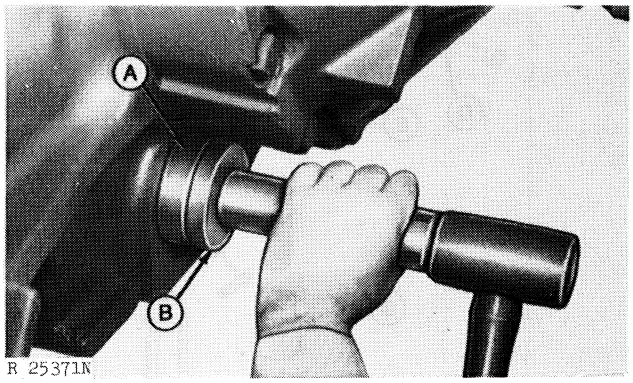

A—Needle Bearing **B—Driver**

Fig. 30-Needle Bearing Installation

Install new needle bearing with D-01045AA (No. 27797) Bushing Driver Set. Lightly coat O.D. of bearing race with "Loctite" and carefully drive bearing in until it bottoms in transmission case. Discard bearing retainer sleeve. Install snap rings in grooves.

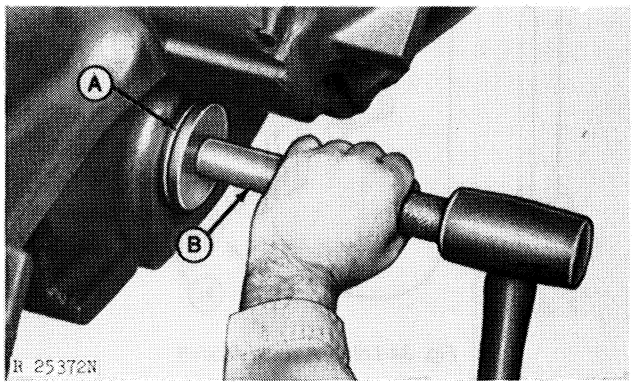

A—Oil Seal **B—Driver**

Fig. 31-Oil Seal Installation

Use D-01045AA (No. 27797) Bushing Driver Set to install new oil seals. Lip of seal is to the inside. Drive seal in until flush with recess in transmission case.

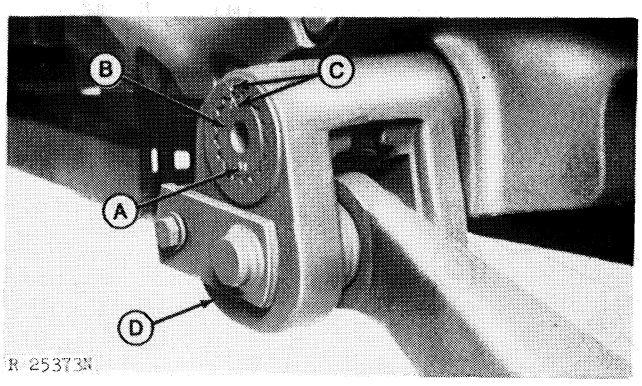

Fig. 32-Draft Shaft Installation

A—"XX" **C—Index Marks**
B—Pivot Shaft **D—Pivot Arm**

Legend for Figure 32

On 8430 Tractors (T1064-) and 8630 Tractors (T1090-) the draft shaft is stamped on one end with a "xx" (A, Fig. 32). Lubricate shaft and CAREFULLY slide into case with the "XX" marked end on the left-hand side of the tractor. Be sure that needle bearings are still in place and that lip of oil seal is not inverted.

Fill reservoir with hydraulic oil.

Install washers between transmission case and pivot arms. Index (C, Fig. 32) arms (D) with spline of shaft (B) and install arms. Tighten arm-to-shaft cap screw to 170 ft-lbs (230 Nm).

3-POINT HITCH

Lift Assist Cylinder 8630 Tractor

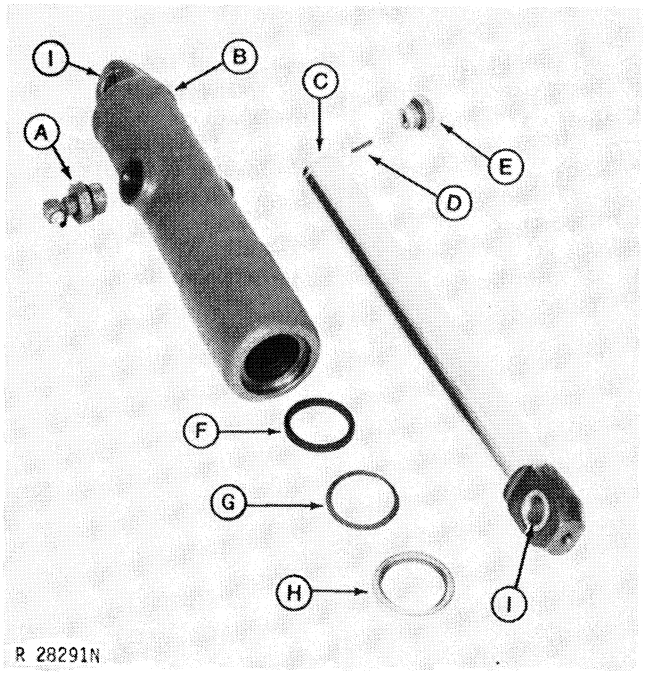

A—Bushing Adaptor **F—O-Ring***
B—Cylinder **G—Backup Ring***
C—Piston **H—Oil Seal**
D—Spring Pin **I —Bushing**
E—Plug ***—Out of use, replaced by oil seal.**

Fig. 33-Rockshaft Assist Cylinder-8630 Tractor

On 8630 Tractor (T9457-) the O-ring (F, Fig. 33) and backup ring (G) in the lift assist cylinder were replaced with an oil seal. Install oil seal with lip downward into cylinder bore. If O-ring (F) and backup ring (G) are being reinstalled the O-ring is installed first into cylinder bore then backup ring.

If necessary, replace wiper seal (H) using JDH-45 Seal Driver. Lip of seal faces outward.

Litho in U.S.A.

Install bushing (I) in cylinder (B) end flush with bore.

NOTE: On later models, a straight bushing replaces the ball joint in the end of piston (C). Install bushing flush with bore in piston.

Lift Links, Draft Links, Center Link and Quik-Coupler

Use Figs. 34, 35 and 36 as a guide for disassembly and assembly.

Inspect and repair or replace parts as necessary.

A—Lift Link
B—Spring Pin (2 used)
C—Special Pin
D—Retaining Pin
E—Upper End
F—Lock
G—Sleeve
H—Upper Body
I —Grease Fitting
J —Yoke
K—Pin
L—Washer
M—Pin
N—Retaining Ring

Legend for Figure 34

A—Pin with Handle
B—Pin (2 used)
C—Rear End
D—Body
E—Lock
F—Front End
G—Cap Screw
H—Bracket
I —Dowel Pin
J —Pin with Handle
K—Washer (4 used)
L—Draft Link
M—Cap Screw (4 used)
N—Bumper (2 used)
O—Nut (4 used)
P—Shim
Q—Pin
R—Retaining Ring

Legend for Figure 35

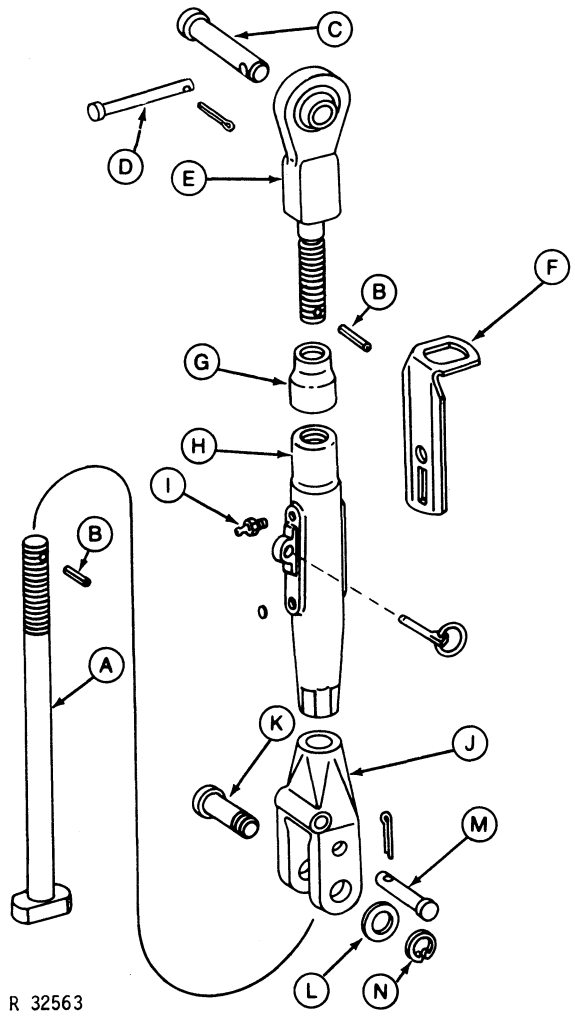

R 32563

Fig. 34-Lift Link (Late Model)

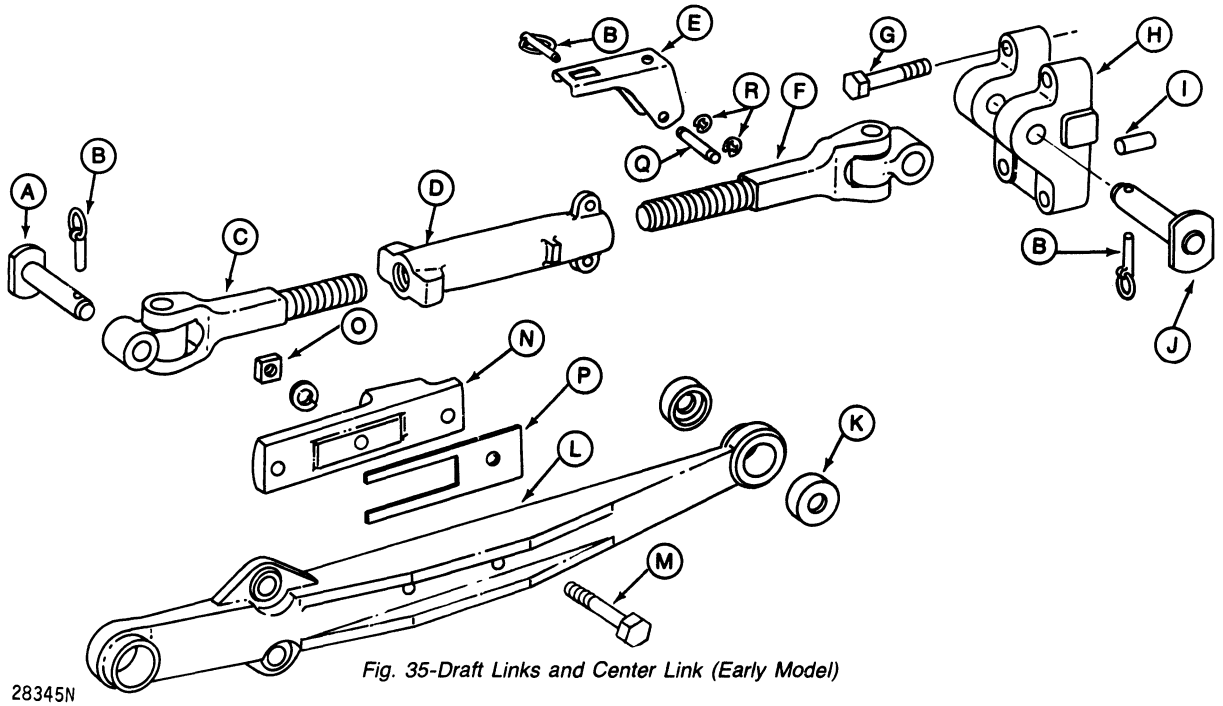

R 28345N

Fig. 35-Draft Links and Center Link (Early Model)

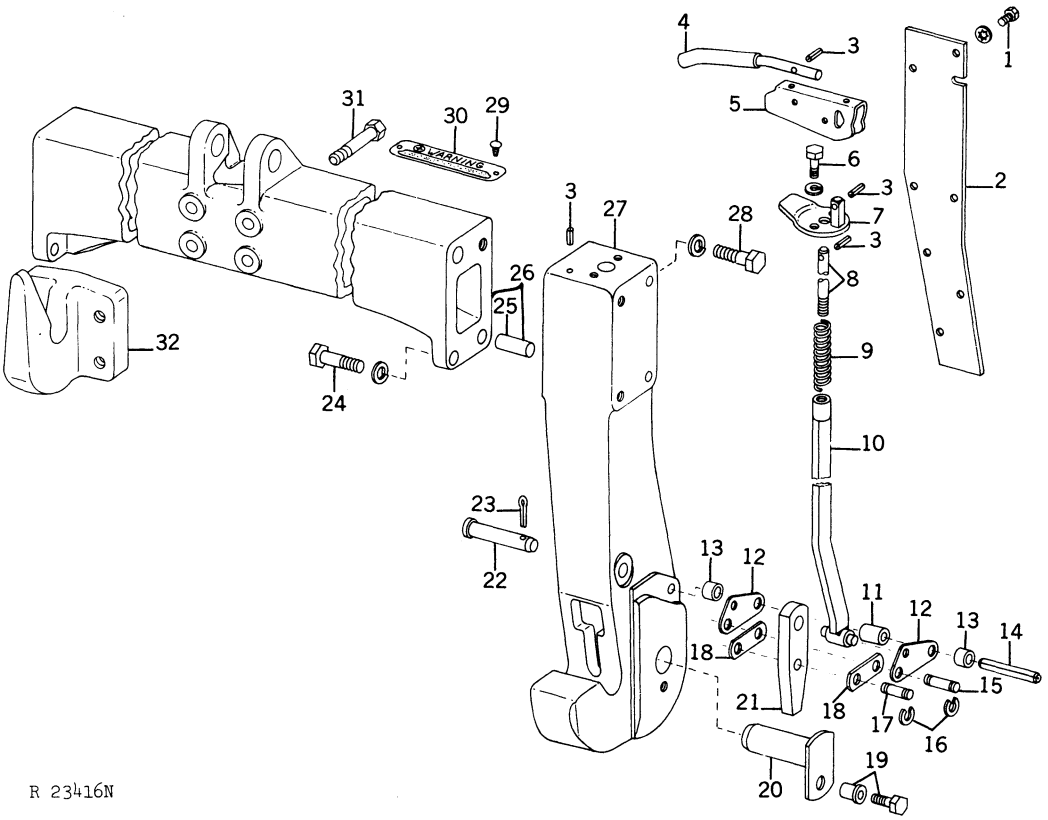

1—Cap Screw (14 used)	9—Spring (2 used)	17—Pin (2 used)	25—Dowel Pin (4 used)
2—Shield (2 used)	10—Lower Rod (2 used)	18—Link (4 used)	26—Cross Member
3—Spring Pin (8 used)	11—Spacer (2 used)	19—Cap Screw (2 used)	27—Side Member
4—Handle	12—Link (4 used)	20—Pin with Handle (2 used)	28—Cap Screw (2 used)
5—Lever	13—Spacer (4 used)	21—Latch (2 used)	29—Rivet (2 used)
6—Cap Screw (4 used)	14—Pin with Cotter Pin (2 used)	22—Pin (2 used)	30—Safety Plate
7—Bracket	15—Pin (2 used)	23—Cotter Pin (2 used)	31—Cap Screw (4 used)
8—Upper Rod (2 used)	16—Retaining Ring (8 used)	24—Cap Screw (2 used)	32—Hook

Fig. 36-Quik-Coupler (Early Model)

NOTE: On later models, pin with handle (20, Fig. 36) is installed with the handle up.

Final Rockshaft Installation

Use the following torque specifications for the rockshaft assembly:

Location	Torque Ft-lbs	Nm
Drawbar front support to rear hinge	300	407
Drawbar rear support to bracket	300	407
Bracket to transmission case	445	603
Drawbar strap to drawbar	250	339
Load sensing cylinder bracket to transmission case	35	47
Rockshaft tie rods	100	136

After rockshaft assembly has been installed, perform tests and adjustments as given on page 30-10.

Litho in U.S.A.

Group 35
SELECTIVE CONTROL VALVE, BREAKAWAY COUPLER, AND REMOTE CYLINDER

GENERAL INFORMATION

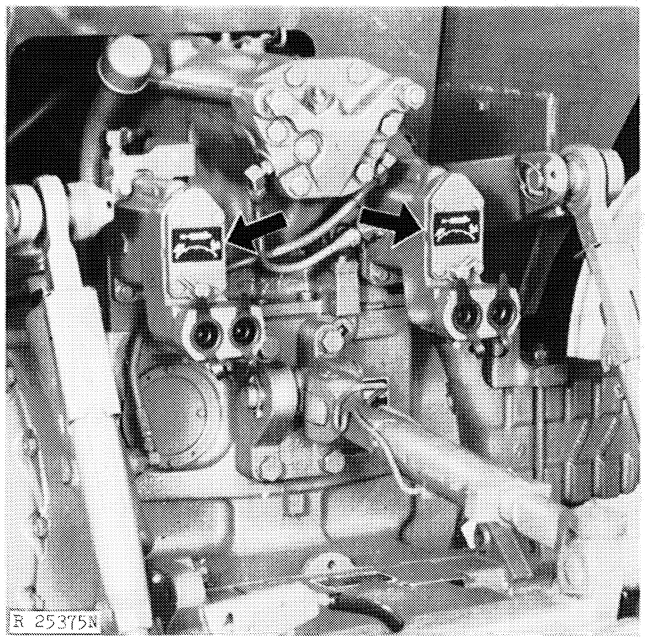

Fig. 1-Selective Control Valve Mounting Positions

The tractor may be equipped with as many as three selective control valve assemblies.

On early models, each valve, with integral breakaway coupler will operate either a single- or double-acting remote cylinder independently or simultaneously with the other two.

On later models, a directional control valve is located in the rockshaft control valve housing cover on tractors with rockshaft or in the selective control valve manifold on tractors without rockshaft. The valve directs single-acting remote cylinder return oil to the reservoir when that cylinder is operated by the lower right-hand (tractors with rockshaft) or right-hand (tractors without rockshaft) selective control valve. See Group 10 of this Section for information on the directional control valve.

The valve operating levers (Fig. 2) are mounted in the console on the right-hand side of the operator's seat. Moving the levers extends, retracts, or places the remote cylinder in float position.

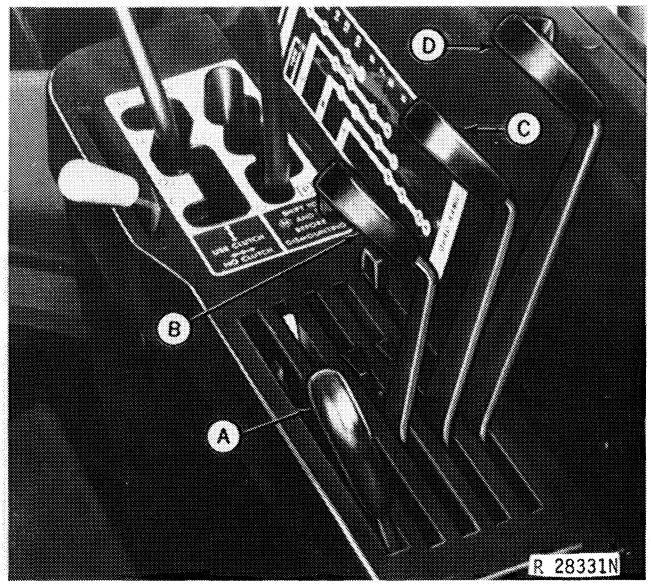

A—Float Lock-out Stop-Float Position
B—"Left-Hand Selective Control Valve"
C—"Lower Right-Hand Selective Control Valve"
D—"Upper Right-Hand Selective Control Valve"

Fig. 2-Control Levers-Tractors With Rockshaft

NOTE: On tractors without rockshaft, lever (B, Fig. 2) will operate left-hand selective control valve. Lever (C) will operate the right-hand selective control valve when tractor is equipped with only two selective control valves. Lever (C) will operate the middle selective control valve and lever (D) will operate the right-hand selective control valve when the tractor is equipped with three assemblies.

A 3.5 x 8-inch (8.89 x 203 mm) remote cylinder may have a hydraulic or mechanical adjustable stop. The hydraulic stop model has a working stroke of 0 to 8 inches (0 to 203 mm). The mechanical stop model has a working stroke of 1-1/8 to 8 inches (2.9 to 20.3 cm) in 7/8 and 5/16 inch (2.2 and 0.8 cm) steps.

ASSEMBLY DESCRIPTION

Four balanced poppet type valves in the selective control valve direct oil flow to and from the remote cylinder. The lower left and upper right poppet valves (10 and 12, Fig. 3) direct pressure oil. The upper left and lower right poppet valves (11 and 13) direct return oil. The poppet valves are opened by console lever movement and rocker (4) rotation.

Litho in U.S.A.

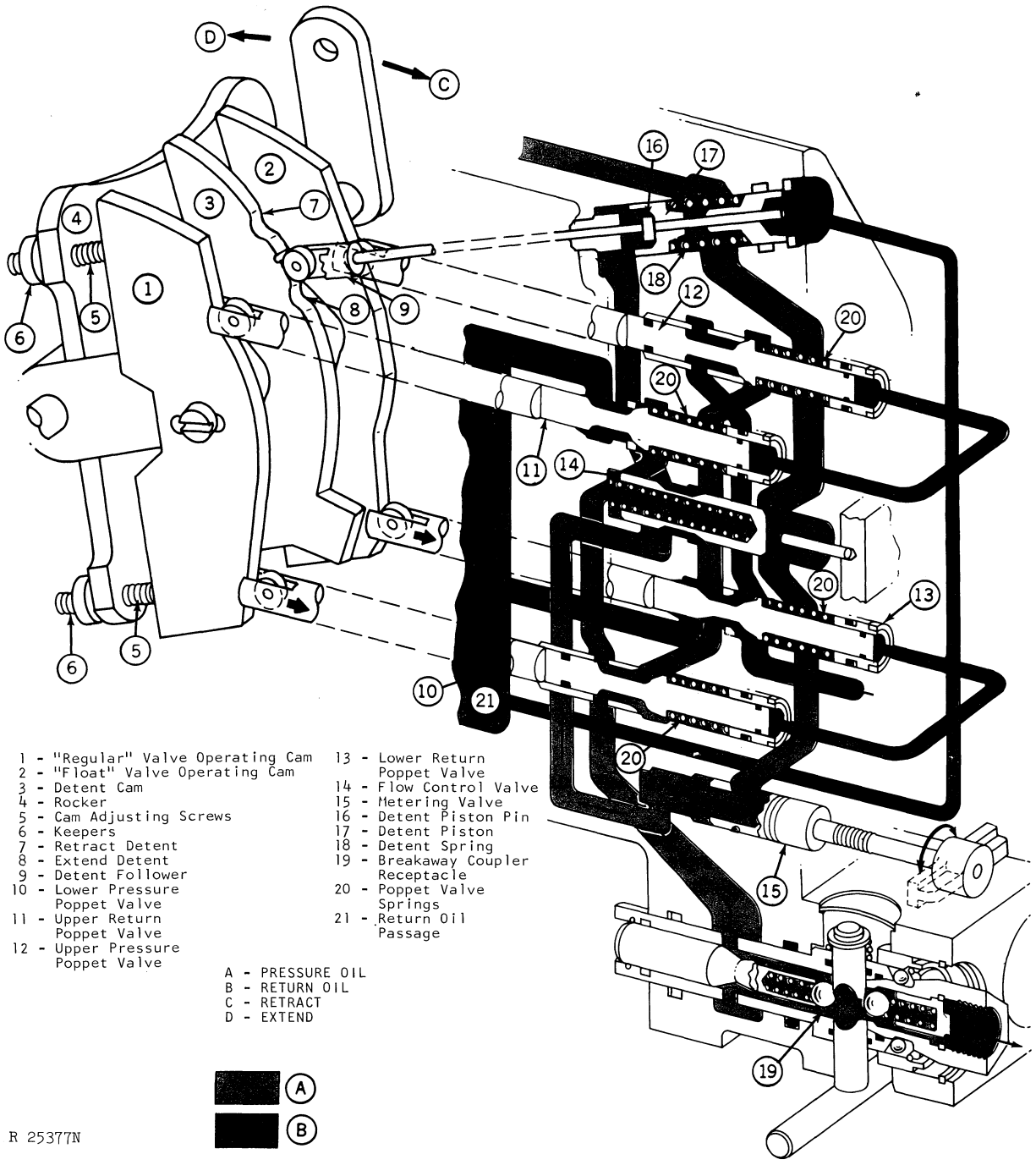

Fig. 3-Selective Control Valve Operation—Extend - EARLY MODEL

Attached to the rocker (4) are two valve operating cams (1 and 2) and a detent cam (3). Cam adjusting screws (5) adjust valve operating cam position so that the return poppet valves open slightly sooner than the pressure poppet valves.

A manually set, slotted metering valve (15) provides a means of obtaining a desired flow rate through the selective control valve to the remote cylinder.

A flow control valve (14) compensates for changes in load to maintain a consistent flow rate. Shuttled in its bore by counter-acting spring and inlet pressure, it reduces or increases the pressure oil passage to the pressure poppet valves, therefore maintains even flow rate, regardless of inlet oil pressure.

A hydro-mechanical detent (3, 9, 16, 17, and 18) provides a near constant force, to hold the valves open when automatic complete extend or complete retract is desired.

Integral breakaway couplers provide a means of quickly connecting or disconnecting the remote cylinder hoses under pressure.

NOTE: On later model tractors, the flow control valve stop pin has been replaced by a flow control valve stop.

OPERATION

Neutral

In neutral position, the console lever is at approximately center in the console guide. All poppet valves are on their seats, allowing no oil to or from the remote cylinder. The cylinder is held in the position that it was in prior to neutral by the trapped oil between the selective control valve and cylinder.

Extend

Console lever movement rearward opens pressure poppet valve (10, Fig. 3) and return poppet valve (13). Pressure oil (A) through metering valve (15) and flow past control valve (14) flows through the open pressure poppet valve to the left-hand breakaway coupler receptacle and on to the remote cylinder. Entering the piston end, oil forces piston and rod out to extend the cylinder.

Return oil (B) from the rod side of the cylinder is forced back through the right-hand receptacle through return poppet valve (13) to the return oil passage.

Retract

Console lever movement forward opens pressure poppet valve (12) and return poppet valve (11). Pressure oil through metering valve (15) and flow control valve (14) bore is directed out open pressure poppet valve through the right-hand receptacle to the rod side of the cylinder. Pressure on the rod side of the cylinder piston retracts the cylinder.

Return oil from the cylinder is forced through the left-hand receptacle out the open return poppet valve (11) to the return oil passage.

When the lever is released in "extend" or "retract", poppet valves springs (20) close the valves, causing the valves to rotate the rocker and return the console lever to "neutral". The remote cylinder is held in position until the console lever is again moved.

Automatic Extend or Retract (Detent Operation)

When the console lever is moved to the front or rear to its limit in the console guide, the appropriate valves are opened to extend or retract the cylinder. However, this degree of rocker (4) rotation also aligns one of the detents (7 or 8) in the detent cam (3) with the detent follower (9).

Inlet and spring pressure on the rear of the detent piston (17) plus a pressure drop across the metering valve moves the detent piston and pin (16) down to hold the follower in the detent. The appropriate pressure and return poppet valves are then held open until the remote cylinder reaches the end of its stroke.

When the remote cylinder reaches the end of its stroke and pressure oil is no longer needed, pressure builds at the front of the detent piston to equalize with inlet and spring pressure at the rear. However, because of a difference in area on the detent piston pin, pressure in front overcomes inlet and spring pressure and the follower is free to move out of the detent.

Without oil pressure or mechanical forces to hold the valves open, the valve springs are able to close the valves and cause the valves to rotate the rocker and move the console lever back to neutral.

Float

When the moveable stop in the console guide (A, Fig. 2) is raised and dropped down in the guide, the selective control valve console lever can be moved further forward. Moving the lever further rotates the rocker so that the detent (7) bypasses the detent follower and the valve operating cams open only the two return poppet valves. With both return poppet valves open, the remote cylinder is able to extend and retract without restriction.

Litho in U.S.A.

Single-Acting Remote Cylinder

On early model tractors the single-acting remote cylinder hose is installed in the left-hand breakaway coupler of one of the selective control valves. The manual bypass valve (See Group 10) can be turned off its seat to allow all return oil to flow directly to the reservoir, if required.

On later model tractors the single-acting remote cylinder hose is installed in the left-hand breakaway coupler of the lower right-hand or right-hand selective control valve. Only return oil from the single-acting cylinder is directed to the reservoir by the directional control valve. See Group 10 of this Section.

The right-hand coupler remains closed during single-acting cylinder operation.

Extend

Moving the console lever rearward opens pressure poppet valve (10, Fig. 3) and return poppet valve (13). Pressure oil (A) through metering valve (15) and flow control valve bore (14) flows through the open pressure valve to the left-hand breakaway coupler and on to the piston end of the cylinder. Pressure oil then forces piston and rod out to extend the cylinder.

Retract

Console lever movement forward opens pressure poppet valve (12) and return poppet valve (11). Normally, open pressure poppet valve (12) would pressurize the right-hand coupler. However the right-hand coupler is closed and there is no demand for pressure oil.

Return poppet valve (11) is open, as is the left-hand coupler (19). The weight of the implement on the rod side of the cylinder is able to force oil out of the piston side through the left-hand coupler, return poppet valve (11) to the reservoir by way of either the manual bypass valve or directional control valve.

Breakaway Couplers

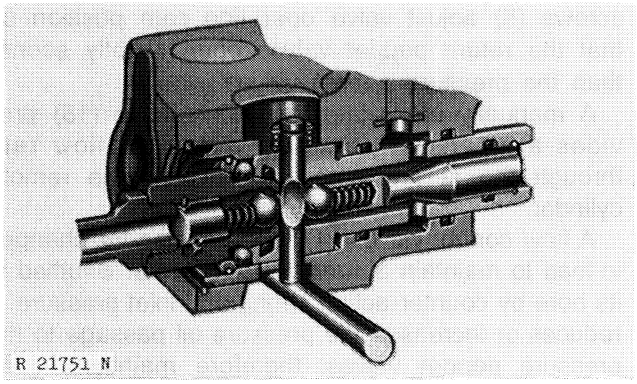

Fig. 4-Breakaway Coupler - Early Model

The receptacle assemblies are moved toward the front of the tractor when the remote cylinder hoses are installed. When the receptacle levers are rotated at right angles to the rear of the tractor, check balls in receptacle and hose are unseated and passage between selective control valve and remote cylinder is open.

Manually rotating the receptacle levers to the rear or pulling the hoses from the receptacles will permit the spring-loaded check balls to seat, closing the passage.

DIAGNOSING AND TESTING

System Malfunctions

Cylinder Won't Extend or Moves Too Slowly

Metering valve in low flow position
Low transmission oil level
Oil filter plugged
Filter bypass valve stuck open
Cooler relief valve stuck open
Oil pressure regulating valve won't open
Transmission pump failure
Transmission suction screen plugged
Low standby pressure
Main pump failure
Steering system malfunction
Rockshaft system leakage
Load on hitch less than load on cylinder
Pressure control valve malfunction

Selective Control Valve Won't Stay In Detent

High standby pressure
Low standby pressure
Main pump malfunction
Pressure control valve malfunction
Load on hitch less than load on cylinder

Selective Control Valve— Remote Cylinder Malfunctions

Cylinder Will Not Extend

Rocker to shaft spring pin sheared
Coupler receptacles not opened
Upper pressure or return poppet valve leaking
Lower pressure or return poppet valve won't open
Cylinder piston O-ring failure

Cylinder Will Not Retract

Remote cylinder stop valve stuck
Coupler receptacles not opened
Rocker to shaft spring pin sheared
Lower pressure or return poppet valve leaking
Upper pressure or return poppet valve won't open
Cylinder piston O-ring failure

Cylinder Settles Under Load

Poppet valves leaking
Cylinder piston O-ring failure
Return poppet valve or guide O-ring failure
Pressure poppet valve roller-end O-ring failure
Coupler receptacle O-ring failure

Control Lever Won't Go Into Detent

Coupler receptacles not opened
Control lever linkage maladjusted or binding
Detent cam installed incorrectly

Control Lever Won't Return to Neutral

Control lever linkage maladjusted or binding
Detent piston or pin stuck or binding

Cylinder Operates Slowly

Metering valve incorrectly adjusted or sticking
Return poppet valve leaking
Cylinder stop valve sticking

Testing

Connect test unit inlet hose as shown in Fig. 5. Be sure the meter arm (B) is in the maximum position. Use fittings from the D-15022NU Master Hydraulic Fitting Flow Test Kit.

Flow Test

Open test unit control valve and operate engine at 1000 rpm.

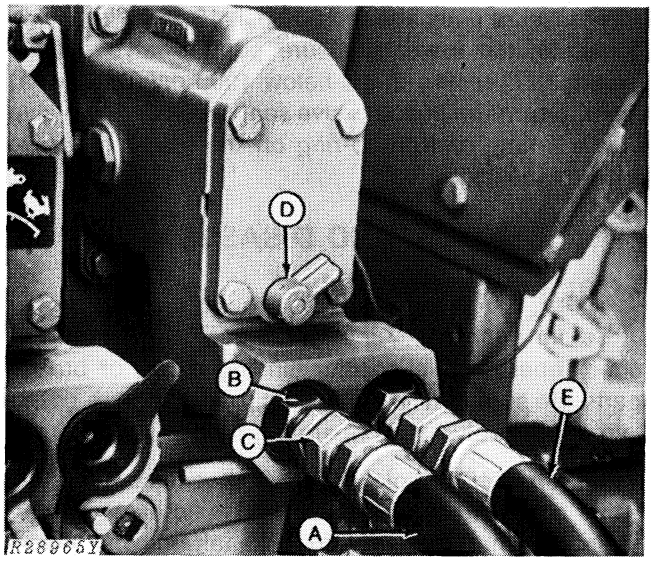

A—Test Unit Inlet Hose
B—0714 Plug (2 used)
C—7020 Union (2 used)
D—Meter Arm (Maximum Flow Position)
E—Test Unit Outlet Hose

Fig. 5-Selective Control Valve Test Connections

Move the console lever rearward to flow oil through the test unit. Adjust test unit control valve to 1500 psi (103.4 Bar).

Read the flow rate on the test unit. The flow should be greater than 15 gpm (0.95 Bar).

Valve Leakage Test

Install a 2-foot (610 mm) length of hose with a 0-3000 psi (0-200 Bar) pressure gauge in the right-hand coupler receptacle. Use connector #2104 from D-15027NU Universal Pressure Test Kit.

Operate the engine at 2000 rpm. Adjust pressure to 1500 psi (103.4 Bar) by moving console lever forward. Maintain pressure for 10 seconds, then release lever.

If pressure rises above 2000 psi (137.9 Bar) within 1 minute, the seat of the **upper** pressure valve (Fig. 3) is leaking. A pressure drop below 1000 psi (68.9 Bar) indicates leakage at **lower** return poppet valve seat, valve O-ring, valve guide O-ring, or the front O-ring on the **upper** pressure valve.

Place gauge and hose in left-hand receptacle and move console lever rearward. Adjust to 1500 psi (103.4 Bar) and maintain for 10 seconds. Release lever.

If pressure rises above 2000 psi (13.79 MPa) within 1 minute, the **lower** pressure poppet valve seat is leaking. If pressure drops below 1000 psi (6.89 MPa) the **upper** return poppet valve seat, valve O-ring, valve guide O-ring, or front O-ring on the **lower** pressure valve is leaking.

REMOVAL AND DISASSEMBLY

Selective Control Valve

Before removing selective control valve assembly, check operating linkage for binding, wear, or broken parts. Be sure that linkage is not preventing the selective control valve from operating properly.

Disconnect control linkage from selective control valve operating arm. Relieve hydraulic system pressure and remove valve from rockshaft housing flange.

Check valve adjustment using the procedure given on page 10.

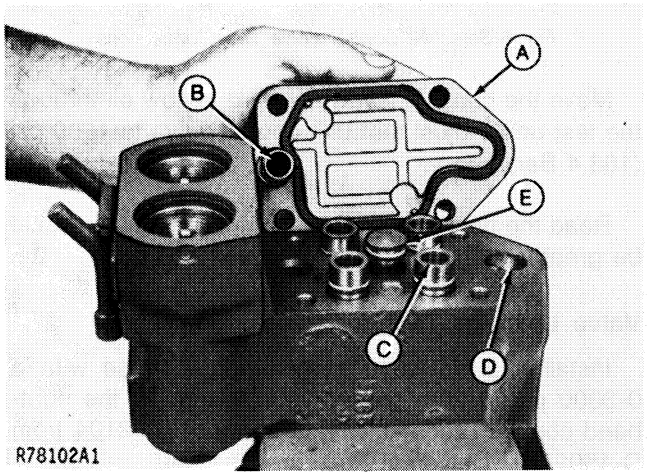

A—Cap
B—Metering Valve
C—Valve Guide
D—Detent Pin and Guide
E—Flow Control Valve Stop

Fig. 6-Cap Removal (Late Model)

CAUTION: Poppet valve springs are compressed. Carefully remove valve cap. If springs momentarily hang up in housing—then release, the valve guides can be propelled from the housing with considerable force.

Remove valve cap from valve housing (Figs. 6 and 7).

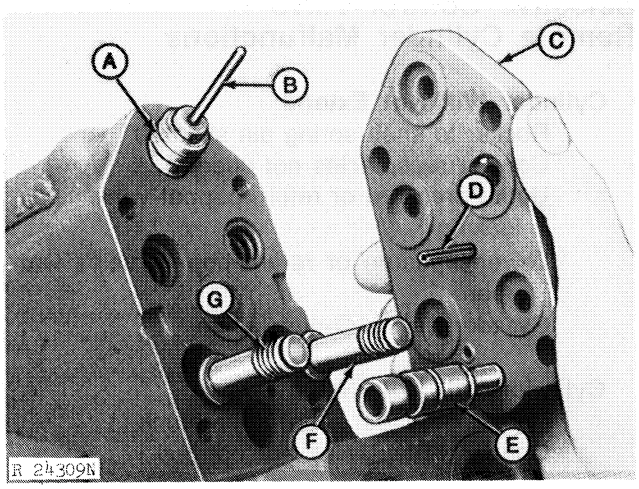

A—Detent Piston
B—Detent Piston Pin
C—Valve Cap
D—Flow Control Valve Stop Pin
E—Metering Valve
F—Return Valve
G—Pressure Valve

Fig. 7-Cap Removal - Early Model (Valve Guides and Springs Not Shown)

Remove O-rings, valve guides, springs, pressure and return valves (Fig. 6 and 7) from housing. Identify valves, springs and valve guides for reassembly.

On late model housings, remove the flow control stop valve (Fig. 6).

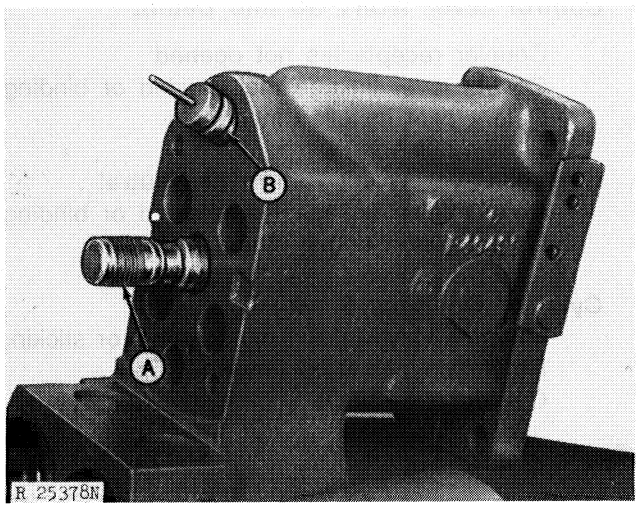

A—Flow Control Valve
B—Detent Piston

Fig. 8-Flow Control Valve Removal - Early Model Shown

Remove flow control valve (Fig. 8) and spring. Remove snap ring, outer detent piston guide, backup ring, O-ring, and detent piston.

To remove outer detent piston guide, it may be necessary to first remove the rocker assembly and detent follower. Then, push on the detent pin to remove pin, piston, spring and outer guide.

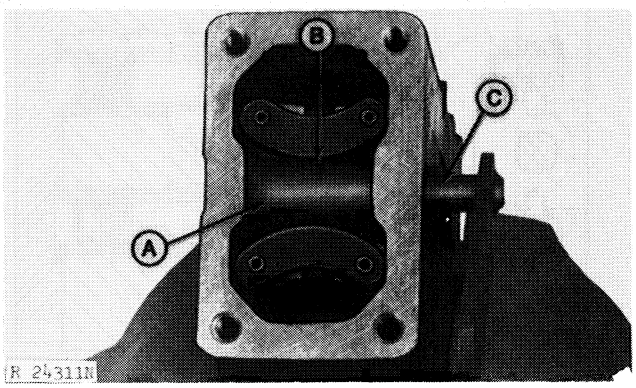

A—Rocker **B—Pin** **C—Control Shaft**

Fig. 9-Rocker Assembly Removal

Rotate valve housing in vise so rocker assembly (Fig. 9) faces upward.

Drive out pin holding control arm shaft to the rocker assembly. Remove cam holding screws and remove rocker assembly from housing. Remove valve operating cams. Note assembled position of these parts for later reassembly.

If necessary, remove inner detent guide by removing follower and driving out guide with a brass drift.

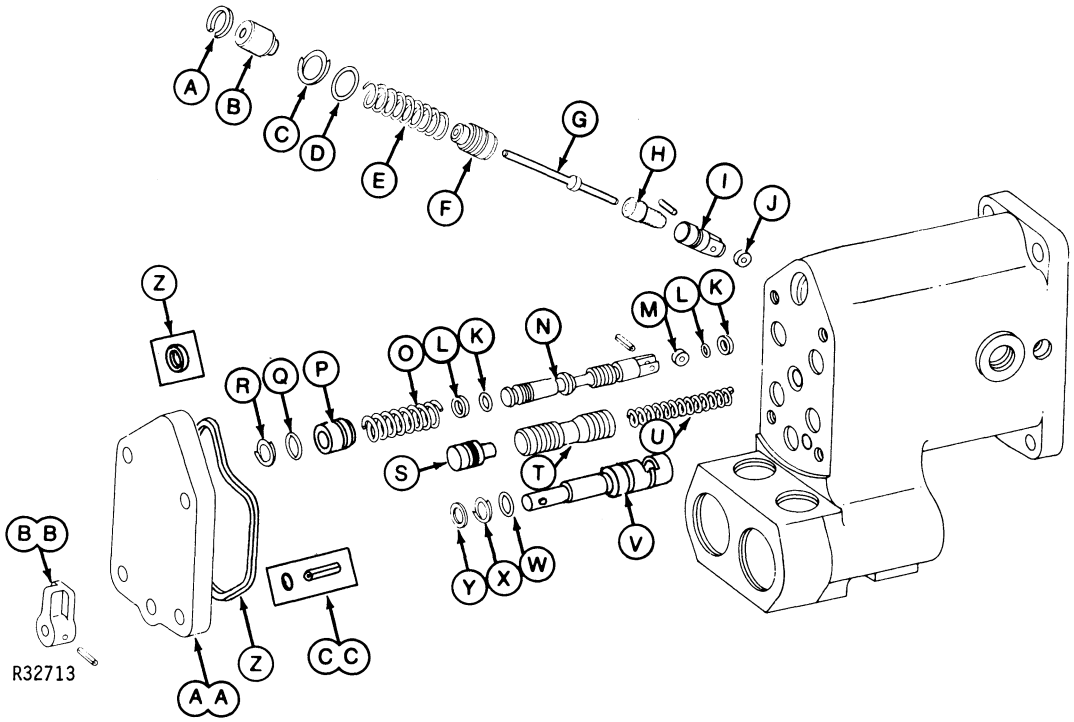

A—Snap Ring
B—Outer Guide
C—Backup Ring
D—O-Ring
E—Spring
F—Detent Piston
G—Detent Pin
H—Inner Guide
I —Follower
J —Roller
K—Backup Ring (6 used) (4 pressure - 2 return)
L—O-Ring (6 used) (4 pressure - 2 return)
M—Roller
N—Poppet Relief
O—Spring
P—Valve Guide
Q—O-Ring
R—Backup Ring
S—Flow Control Valve Stop
T—Flow Control Valve
U—Spring
V —Metering Valve
W —O-Ring
X —Backup Ring
Y —Thrust Washer
Z —Packing
AA—Cap
BB—Arm

Fig. 10-Exploded View of Selective Control Valve

INSPECTION AND REPAIR

Cap

Inspect valve cap (AA, Fig. 10) for damage. Replace if cracked.

Replace packing if necessary.

Replace flow control valve stop (S) (Later Model) if damaged. The stop's length is 0.9375 inch (23.813 mm). A stop that is too short can cause jerky valve operation.

Replace the flow control valve stop pin (S) (Early Model) if damaged. The pin's exposed length is 0.9375 inch (23.813 mm) above the cap.

Housing

Inspect housing for wear or damage. Remove nicks and burrs with a fine file. Replace housing if cracked.

Check valve bores in housing. Replace housing if bores are badly scored.

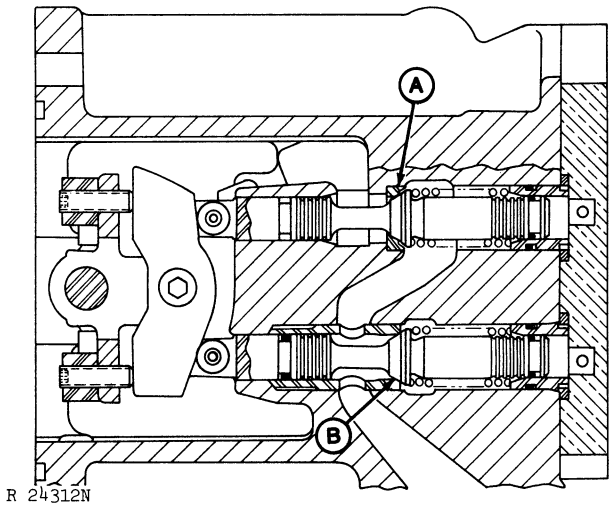

A—Return Valve Seat **B—Pressure Valve Seat**

Fig. 11-Checking Valve Seats

Check valve seats (Fig. 11) for damage. Seats are not replaceable, but may be repaired using D-15002NU (NJD150) Valve Seat Repair Kit. Use kit exactly as directed by the manufacturer. Take care not to squeeze housing while repairing seats.

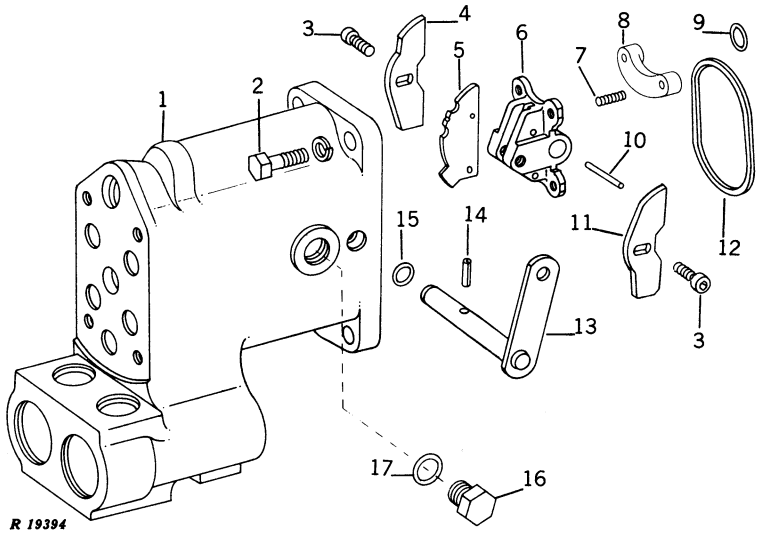

1—Housing
2—Cap Screw (4 used)
3—Special Screw (2 used)
4—Valve Operating Cam—"Regular"
5—Detent Cam
6—Rocker
7—Set Screw (4 used)
8—Keeper (2 used)
9—Packing
10—Pin (2 used)
11—Valve Operating Cam—"Float"
12—Packing
13—Arm with Shaft
14—Spring Pin
15—O-Ring (2 used)
16—Plug (2 used)
17—O-Ring (2 used)

Fig. 12-Exploded View of Selective Control Valve Rocker Assembly - Early Model Shown

NOTE: On early models, selective control valve housings are equipped with a spring in the end cap return oil passage. The pin prevents the O-ring (CC, Fig. 10) from being pulled into the passage during sudden oil surges. The O-ring and pin are not required in the later model valve housings.

Valves

Inspect valves for scoring or damage.

Check valve rollers for freedom, flat spots, pits or wear. Replace if necessary.

Check pressure, return, flow control and detent piston springs for the following specifications and replace as necessary.

Spring	Working Load	
	Late Model	Early Model
Pressure Valve	1.20 in. at 36-44 lbs. (30.5 mm at 160-196 N)	1.25 in. at 36-44 lbs. (31.8 mm at 160-196 N)
Return Valve	1.20 in. at 18-22 lbs. (30.5 mm at 80-98 N)	1.25 in. at 19-23 lbs. (31.8 mm at 84-102 N)
Flow Control Valve	2.15 in. at 41-50 lbs. (55 mm at 182-222 N)	2.15 in. at 41-50 lbs. (54.6 mm at 180-222 N)
Detent Piston	1.25 in. at 19-23 lbs. (31.8 mm at 85-102 N)	1.25 in. at 19-23 lbs. (31.8 mm at 84-102 N)

Inspect detent assembly for scoring or damage. Be sure pin will move freely in piston and guides.

Inspect rocker, operating and detent cams.

ASSEMBLY

Assemble the valve in reverse order of disassembly.

Dip new O-rings, backup washers, and parts in clean John Deere Hy-Gard Transmission and Hydraulic Oil. Use special care to keep all parts dirt free.

Insert detent follower. Be sure follower roller is located on rocker.

With the housing in position (1, Fig. 12), the pointed ends of the valve operating cams (4 and 11) are installed toward the detent piston assembly. Note that the "float" cam (11) is shorter than the "regular" cam and is installed on the numbered side of the housing (on the left, as you look into the rocker cavity).

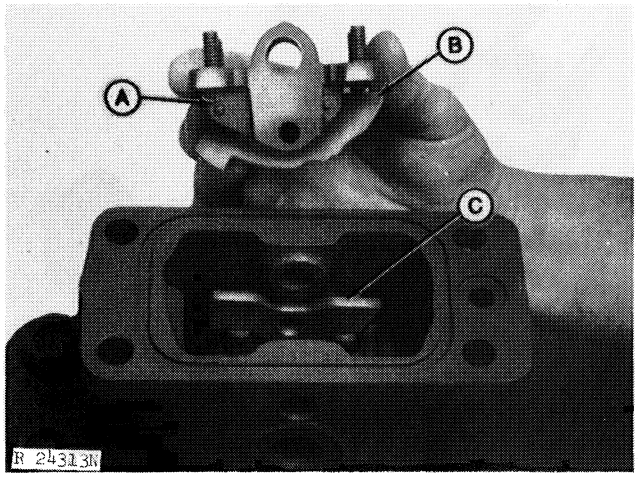

A—Rocker **B—Detent Cam** **C—"Float" Cam**

Fig. 13-Detent Cam Installation

Install detent cam (Fig. 13) in rocker and install rocker assembly in housing. Be sure that detent cam will locate on detent follower.

Install arm with shaft (13, Fig. 12) on housing.

Install pressure and return valves and springs in bores. If the valves have not been replaced, install each valve in the bore from which it was removed. Be sure that the correct spring is in each bore.

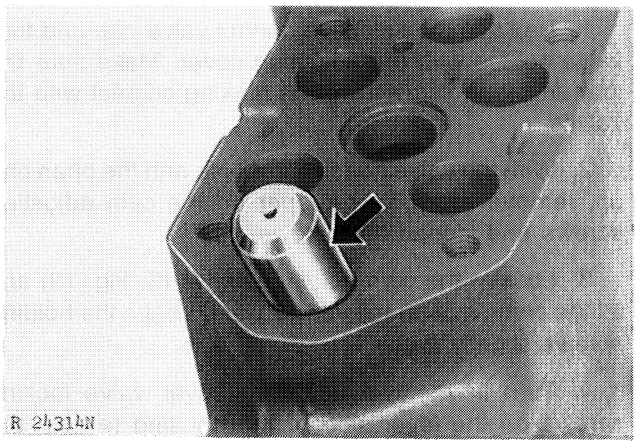

Fig. 14-Inner Detent Piston Guide Driver

Drive inner detent guide into detent bore with JDH-28 Driver (Fig. 14).

Install detent pin with the short shank portion of pin in first. Install the detent piston with the shoulder facing outward. Install O-ring, backup ring, spring, detent outer guide and snap ring.

Litho in U.S.A.

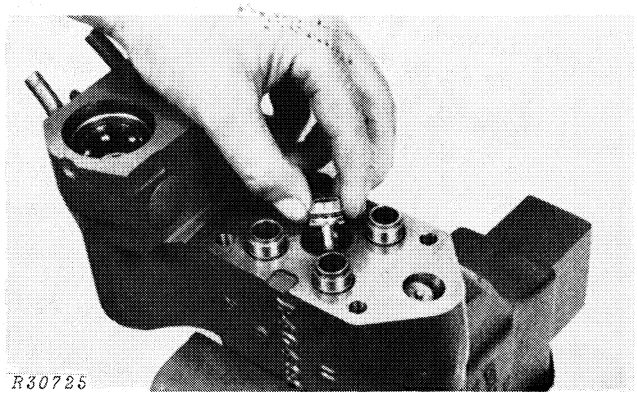

Fig. 15-Flow Control Valve Stop Installation - Later Model

Install flow control valve stop with pin facing flow control valve (Fig. 15).

ADJUSTMENT

The return and pressure valves are adjusted by setting specified distance between the selective control valve cams and the valve rollers while the selective control valve is in neutral position. This is to insure that the return valves open before the pressure valves during selective control valve operation.

A special adjusting cover, JDH-15C is used to make the valve adjustment. The cover valve locking screws hold the valves on their seats.

The adjusting procedure is as follows:

1. Replace the selective control valve cap and four valve guides with the adjusting cover. Make sure the four adjusting screws are not making contact with the valves.

2. With the valve housing in a vise and the open end up, remove the rubber keeper on the cam adjusting screws and loosen the screws.

3. Loosen the cam holding screws (3, Fig. 12) and let the cams rest on the valve rollers. Leave the holding screws slightly loose.

4. Turn in the two adjusting cover valve locking screws on the lever side of the housing to hold the pressure and return valves on that side on their seats. Rotate the rocker assembly to visually make sure that the cam is riding properly on the valve rollers. (The valves could possibly turn 90°, preventing cam contact.)

IMPORTANT: Do NOT use a wrench on any of the adjusting cover screws. Tighten with fingers only.

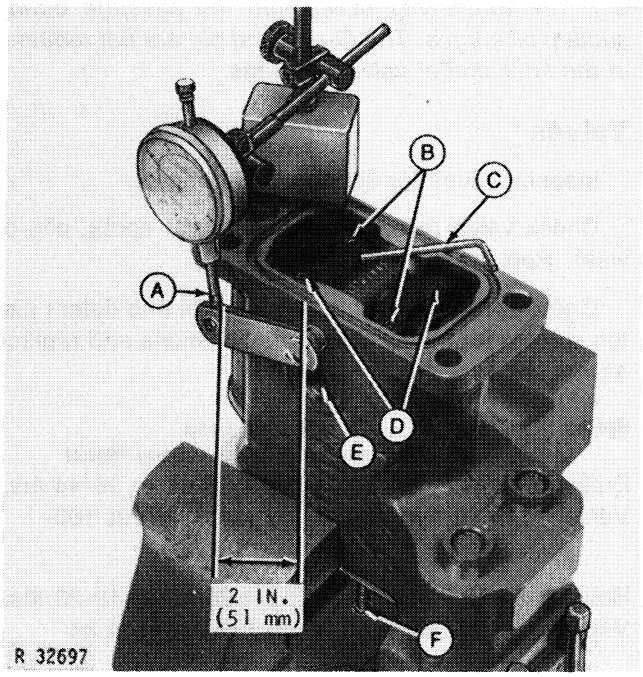

A—Dial Indicator
B—Return Valve Adjusting Screw
C—Allen Wrench
D—Pressure Valve Adjusting Screw
E—Cam Holding Screw Bore
F—Lock Screw

Fig. 16-Valve Adjustment

5. Rotate rocker until detent follower is felt as small neutral notch in cam passes over it. With rocker in neutral, install a dial indicator on valve lever two inches (51 mm) from center of rocker shaft (Fig. 16). Zero dial indicator at midpoint of its travel.

6. Turn in the two cam adjusting screws on the lever side of the housing evenly until they just touch the cam. Do not apply pressure. If screws appear uneven, check the cam for tilt.

7. Install rubber keepers and back the cam adjusting screw over the return valve 1/8 turn. Back out the adjusting screw located over the pressure valve 1/4 turn.

8. Tighten cam holding screws and pry cam up against adjusting screws.

NOTE: Each time the cam adjusting screws are backed away from the cams, the cams must be pried up against the screws, without loosening the cam holding screws.

Litho in U.S.A.

9. Rotate the rocker in both directions. As the cam touches the return valve roller, the dial indicator should read 0.008-0.040 inch (0.20-1.02 mm). As the cam touches the pressure valve roller in the other direction, the indicator should read 0.048-0.080 inch (1.22-2.03 mm). Turn cam adjusting screws in to decrease or out to increase the distance.

10. Occasionally check the "zero" reading on the dial indicator as directed in step 5.

11. Back out the adjusting cover valve locking screws on the lever side and turn in the valve locking screws on the opposite side to hold the other return and pressure valves on their seats. Zero the dial indicator.

12. Adjust the other return and pressure valves in the same manner as the first two were adjusted. The dial indicator should read as specified.

NOTE: Remember, pressure and return valves are diagonally opposite each other in the valve housing.

13. Recheck the zero reading and all four valve adjustments. Readjust if necessary.

14. Reinstall selective control valve cap and four valve guides. Later model housings have guides without the necked down end. Be sure to install the short end and O-ring first into housing. Tighten cap to 35 ft-lbs (47 Nm) DO NOT remove valves as they must be readjusted if removed and installed.

BREAKAWAY COUPLER

Disassembly

Drive a punch into the expansion plugs (Q, Fig. 17) in the coupler housing and pry out. Remove retaining rings (P), spring (O), and operating levers (S).

Use a brass drift to drive receptacle assembly from housing. Remove steel balls and snap ring from receptacle.

Press down on receptacle plug (M) and remove snap ring. Use a brass drift to drive plug, spring and ball from receptacle.

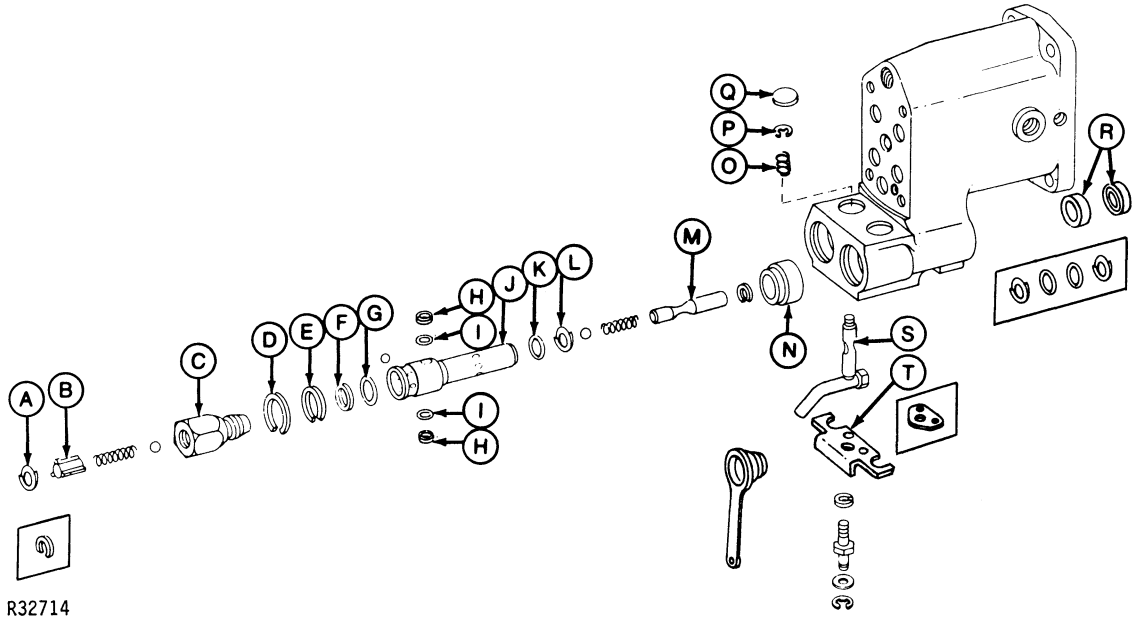

A—Snap Ring*
B—Spring Guide
C—Cylinder Hose Plug
D—Snap Ring
E—Snap Ring
F—Backup Ring
G—Quad Ring Packing
H—O-Ring
I —Backup Ring
J —Receptacle
K—O-Ring
L —Backup Ring
M—Plug
N—Sleeve
O—Spring
P—Retaining Ring
Q—Expansion Plug
R—Oil Seals*
S—Operating Lever
T—Cam*
*** —Replace items boxed on later model tractors.**

Fig. 17-Exploded View of Breakaway Coupler

Inspection and Repair

Check parts for wear or damage.

Replace O-rings and backup washers.

When installing oil seals in breakaway coupler bore, be sure grooves in seals face each other.

Replace damaged or worn parts as necessary.

Assembly

Install valve ball, spring, and plug on receptacle and replace snap ring.

Install snap ring on receptacle and replace steel balls.

Install receptacle assembly in coupler.

Selective Control Valve Installation

On tractors with rockshaft, place packing in selective control valve groove and install in positions as shown in Fig. 1.

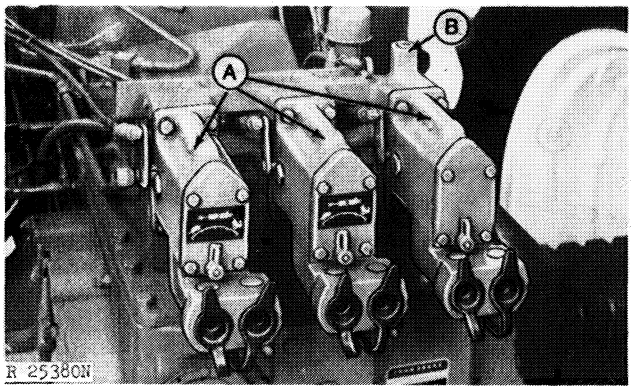

A—Selective Control Valves **B—Directional Control Valve**

Fig. 18-Selective Control Valves - Tractors Without Rockshaft

On tractors without rockshaft, install three selective control valves as shown in Fig. 18. If the tractor is equipped with only two selective control valves, install one on each side of the manifold.

Connect console lever linkage so that inside lever will operate left-hand valve, middle lever will operate middle valve and outside lever will operate the right-hand valve. If only two selective control valves are available, the middle lever should operate the right-hand selective control valve.

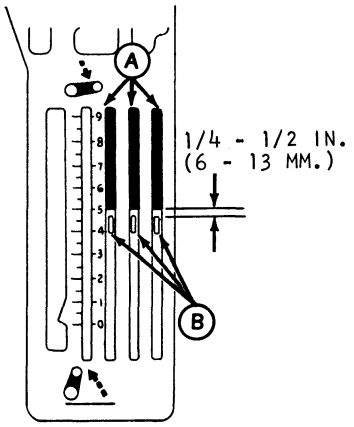

A—Float Lockout Stop **B—SCV Levers in Retract Position**

Fig. 19-Selective Control Valve Linkage Adjustment

Adjust selective control valve linkage so that the console lever (B, Fig. 19) is 1/4 to 1/2 inch from the float lockout stop (A) when the selective control valve is in the retract position.

Check and fill main reservoir with John Deere Hy-Gard Transmission and Hydraulic Oil.

Make selective control valve tests as described on page 70-35-5.

REMOTE CYLINDER

General Information

FOS

See "Hydraulic Cylinders" in FOS Manual-10—HYDRAULICS, for cylinder theory of operation. Refer to operator's manual for information on connecting cylinders.

Disassembly

Refer to Fig. 20 for disassembly and assembly of cylinder.

Remove cylinder end cap (2, Fig. 20).

Remove stop valve assembly (6) by pushing stop rod assembly into cylinder to its limit.

Secure rod with yoke (37) when removing special lock nut (24). Remove piston and rod from cylinder.

Remove stop rod assembly by driving groove pin (26) from stop rod arm (27). Push rod all the way into cylinder to prevent distortion of rod while driving pin.

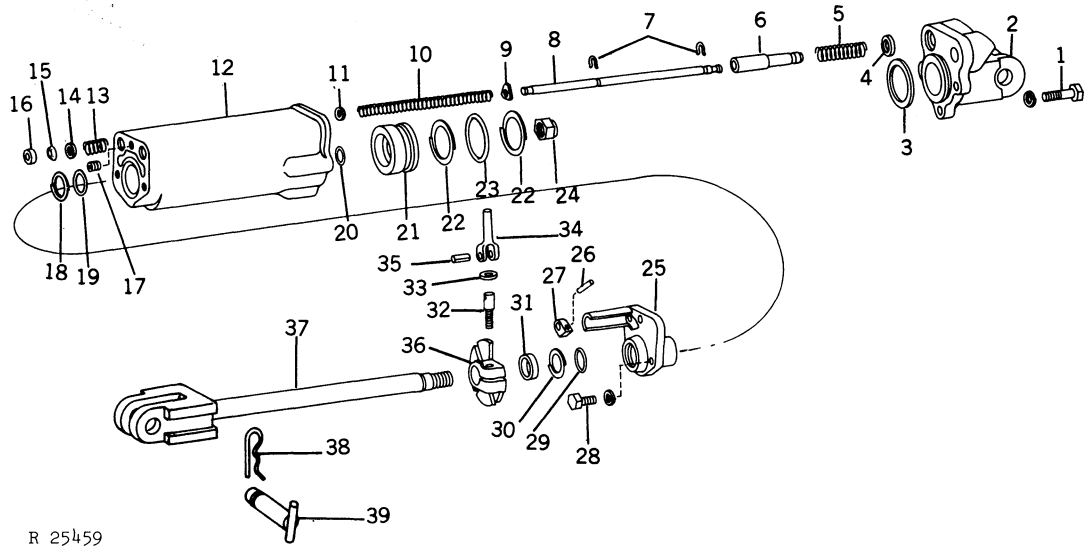

1—Cap Screw
2—End Cap
3—Gasket
4—Oil Passage Gasket
5—Stop Valve Spring
6—Stop Valve
7—Snap Ring (2 used)
8—Stop Rod
9—Stop Rod Washer
10—Stop Rod Spring
11—Washer
12—Cylinder
13—Stop Rod Packing Spring
14—Stop Rod Packing Adapter
15—V-Packing (3 used)
16—Stop Rod Packing Adapter
17—Plug
18—Backup Ring
19—O-Ring
20—O-Ring
21—Piston
22—Backup Ring (2 used)
23—O-Ring
24—Lock Nut
25—Piston Guide Rod
26—Groove Pin
27—Stop Rod Arm
28—Cap Screw
29—O-Ring
30—Backup Ring
31—Oil Seal
32—Stop Screw
33—Washer
34—Stop Lever
35—Spring Pin
36—Piston Rod Stop
37—Piston Rod with Yoke
38—Pin
39—Attaching Pin

Fig. 20-Exploded View of Hydraulic Stop Remote Cylinder

Inspection and Repair

Inspect all parts for wear and damage. Replace parts as necessary.

Replace all O-rings, gaskets, backup rings, seals, and packings.

Assembly

Clean and dip all parts in John Deere Hy-Gard Transmission and Hydraulic Oil.

Press in new piston rod oil seal (31, Fig. 20) with sealing lip toward outer end of bore.

Install stop rod V-packing (15) with sealing edge toward cylinder.

Install piston rod guide (25) but do not tighten.

Install stop rod assembly. Use stop valve assembly to push stop rod through V-packing. Tighten piston rod guide on cap screws to 35 ft-lbs (47 Nm) torque.

Push stop rod all the way into cylinder when installing groove pin (26).

Install stop valve assembly. Push valve assembly into cylinder.

Install piston rod. Install O-ring (20) and backup rings (19) on piston with O-ring between washers.

Install piston on rod. Push piston well into cylinder. Hold piston and tighten nut to 300 ft-lbs (407 Nm) torque.

Locate the piston rod stop on the piston rod with the stop lever (34) opposite the stop rod arm.

Install gasket (3) on end cap (2). Insert two oil passage gaskets (4). Place spring (5) over end of stop valve and install end cap. Torque cap screws to:

D Grade - 85 ft-lbs (115 Nm)
F Grade - 120 ft-lbs (163 Nm)

Bleeding

Connect cylinder hose to breakaway coupler.

NOTE: Be certain that hose on stop side of cylinder is connected to the left-hand receptacle to assure remote cylinder extension.

Start tractor engine and operate cylinder seven or eight times to remove trapped air in cylinder. Air will bleed faster if cylinder is placed in a vertical position with hose end upward.

Litho in U.S.A.

Group 40
SPECIFICATIONS AND SPECIAL TOOLS

SPECIFICATIONS

Item	New Part Specification	Wear Tolerance
General Information, Diagnosis, and Tests		
Test oil temperature	110 and 150°F (43 and 66°C)	
Time cycle tests		
Rockshaft lift (75° rotation)	2.5 to 3.0 sec. at 2000 rpm	
3.5 x 8 in. (89 x 203 mm) remote cylinder extension	1.50 to 2.00 sec. at 2100 rpm	
Standby pressure at 2000 rpm	2250 to 2300 psi (155-159 bar) (158-161 kg/cm²)	
Reservoir, Filter, Valves, and Oil Cooler		
Return oil check valve spring compression	0.75 in. (19.1 mm) at 10.8 to 13.2 lbs (49 to 58 N)	
Return oil filter relief valve opening pressure	91 psi (6.27 bar) - differential	
Clutch oil filter relief valve opening pressure	74 psi (5.10 bar) (5.2 kg/cm²) - differential - (to lube)	
	85 psi (5.86 bar) (6 kg/cm²) - differential - to sump	
Return filter relief valve spring compression	4.31 in. (109.5 mm) at 23.2 to 28.4 lbs. (103 to 126 N)	
Clutch oil filter relief valve spring compression	4.31 in. (109.5 mm) at 23.2 to 28.4 lbs. (103 to 126 N)	
Oil cooler relief valve opening pressure	115 psi (7.9 bar) (8.0 kg/cm²) - (to lube)	
	135 psi (9.3 bar) (9.5 kg/cm²) - (to sump)	
Oil cooler relief valve spring compression	4.54 in. (115.3 mm) at 36.5 to 44.5 lbs. (162 to 198 N)	
Oil pressure regulating valve		
Opening pressure	175 psi (12.06 bar)—to main pump	
Inner spring compression	4.00 in. (101.6 mm) at 42.0-51.4 lbs. (186-227 N)	
Outer spring compression	1.63 in. (41.4 mm) at 14.7 to 17.9 lbs. (65 to 80 N)	
Pressure control valve operating pressure	1600 to 1700 psi (110 to 117 bar)	
Pressure control valve spring compression	3.50 in. (88.9 mm) at 45 to 55 lbs. (200 to 245 N)	
Directional valve spring compression	0.75 in. at 10.8 to 13.2 lbs (19.05 mm at 48 to 59 N)	
Oil cooler test pressure	300 psi (20.68 bar)	
Torques		
Return oil filter relief valve housing	45 ft-lbs (61 Nm)	
Clutch oil filter relief valve housing with clutch oil pump	35 ft-lbs (47 Nm)	
Filter screw to housing	45 ft-lbs (61 Nm)	
Oil pressure regulating valve housing	21 ft-lbs (28 Nm)	

Litho in U.S.A.

Item	New Part Specification	Wear Tolerance

Hydraulic Pumps

Clutch Oil Pump

Flow test (2000 rpm)	17 gpm (1.07 l/s) at 110°F (43°C) 16 gpm (1.01 l/s) at 150°F (66°C)	
Clutch oil filter relief		
Valve spring compression	4.31 in. at 23.2 to 28.4 lbs (109.5 mm at 103.2 to 126.3 N)	
Oil pump driven gear		
O.D.	2.3395 to 2.3405 in. (59.423 to 59.448 mm)	
I.D.	0.6220 to 0.6230 in. (15.798 to 15.824 mm)	
Thickness	0.8080 to 0.8090 in. (20.523 to 20.548 mm)	
Oil pump idler gear		
O.D.	2.1075 to 2.1085 in. (53.530 to 53.566 mm))	
Bushing I.D.	0.7518 to 0.7528 in. (19.095 to 19.121 mm)	
Thickness	0.08080 to 0.8090 in. (20.523 to 20.548 mm)	
Oil pump idler shaft O.D.	0.7497 to 0.7503 in. (19.040 to 19.060 mm)	
Oil pump housing		
Driven gear bore I.D.	2.3465 to 2.3485 in. (59.601 to 59.651 mm)	
Idler gear bore I.D.	2.1140 to 2.1160 in. (53.695 to 53.746 mm)	
Drive shaft bushing I.D.	0.6232 to 0.6242 in. (15.829 to 15.854 mm)	
Gear bore depth	0.8117 to 0.8133 in. (20.617 to 20.658 mm)	

Oil Transfer Pump

Oil pump driven gear		
O.D.	2.2680 to 2.2690 in. (57.607 to 57.632 mm)	
I.D.	0.6220 to 0.6230 in. (15.799 to 15.824 mm)	
Thickness	1.0000 to 1.0020 in. (25.400 to 25.451 mm)	
Oil pump idler gear		
O.D.	2.1075 to 2.1085 in. (53.530 to 53.566 mm)	
Bushing I.D.	0.7518 to 0.7528 in. (19.095 to 19.121 mm)	
Thickness	0.8080 to 0.8090 in. (20.523 to 20.548 mm)	
Oil Pump idler shaft O.D.	0.6284 to 0.6290 in. (15.961 to 15.976 mm)	
Oil pump housing		
Driven gear bore I.D.	2.2720 to 2.2740 in. (57.734 to 57.760 mm)	
Idler gear bore I.D.	2.2720 to 2.2740 in. (57.734 to 57.760 mm)	
Drive shaft bushing I.D.	0.6232 to 0.6242 in. (15.829 to 15.854 mm)	
Gear bore depth	1.0050 to 1.0070 in. (25.527 to 25.578 mm)	
Pump drive shaft		
O.D. at clutch oil pump driven gear location	0.6237 to 0.6247 in. (15.841 to 15.867 mm)	
O.D. at oil transfer pump driven gear location	0.6207 to 0.6217 in. (15.765 to 15.791 mm)	
Torques		
Clutch oil pump inlet tube bracket to transmission case	170 ft-lbs (230 Nm)	
Oil transfer pump inlet tube retaining plate	20 ft-lbs (27 Nm)	
Filter housing and pump assembly to front hinge	35 ft-lbs (47 Nm)	
Filter cover to filter housing	45 ft-lbs (61 Nm)	

Item	New Part Specification	Wear Tolerance

Main Hydraulic Pump

Standby pressure	2250 to 2300 psi (155-159 bar) (158-161 kg/cm²) at 2000 rpm
Minimum output	28.5 gpm (108 L/m) @ 2000 rpm and 150°F (66°C)
Pump shaft end play	0.001 to 0.005 in. (0.03-0.10 mm)
Thrust washer thickness	0.0422 to 0.0452 in. (1.072 to 1.148 mm)
Piston O.D.	0.9630 to 0.9634 in. (24.46 to 24.47 mm)
Piston bore	0.9637 to 0.9643 in. (24.48 to 24.49 mm)
Piston spring compression	1.78 in. (45.2 mm) at 47 to 53 lbs. (209 to 236 N) (MUST be matched to within 1.5 lbs. [6.7 N] of each other)
Inlet valve lift	0.0600 to 0.0800 in. (1.524 to 2.032 mm)
Inlet valve guide position	0.5330 to 0.5370 in. (13.53 to 13.64 mm) from finished face
Stroke control valve spring compression	3.30 in. (83.8 mm) at 125 to 155 lbs. (556 to 689 N)
Crankcase outlet valve spring compression	2.20 in. (55.9 mm) at 45 to 55 lbs. (200 to 245 N)
Torques	
Pump piston plug	100 ft-lbs (136 Nm)
Stroke control valve housing to pump housing cap screws	85 ft-lbs (115 Nm)
Pump to pump support cap screws	85 ft-lbs (115 Nm)
Pump drive shaft cap screws	35 ft-lbs (47 Nm)
Special drive screws with Loctite	35 ft-lbs (47 Nm)
Coupler cap screws	30 ft-lbs (41 Nm)
Coupler lock nuts	30 ft-lbs (41 Nm)

Power Steering

Metering Pump

Steering shaft spring compressed	5.28 in. (134.1 mm) at 17.1 to 20.9 lbs (76.07 to 92.97 N)
Friction spring compression	0.77 in. (19.5 mm) at 81 to 99 lbs (360 to 440 N)
Torque on nuts	35 ft-lbs (47 Nm)

Steering Valve

Control circuit relief valve opening pressure	1500 to 1800 psi (103.4 to 124.1 Bar)
Pressure oil circuit relief valve opening pressure	4250 to 4750 psi (293.1 to 327.6 Bar)
Control circuit relief valve spring compression	0.64 in. (16.2 mm) at 26.5 to 33.5 lbs (118 to 149 N)
Pressure oil circuit relief valve spring compression	1.85 in. (46.9 mm) at 219.6 to 268.4 lbs (976.8 to 1193.8 N)
Make-up valve springs compression	0.34 in. (8.6 mm) at 1.24 to 1.52 lbs (5.5 to 6.7 N)

Item	New Part Specification	Wear Tolerance

Steering and Feedback Cylinders

Steering cylinder piston nut torque	150 to 250 ft-lbs (203 to 339 Nm)	
Steering cylinder spanner nut torque	125 to 175 ft-lbs (169 to 237 Nm)	
Feedback cylinder		
Outer rod bushing I.D.	1.1265 to 1.1295 in. (28.613 to 28.689 mm)	
Inner rod O.D.	1.1242 to 1.1261 in. (28.555 to 28.605 mm)	
Bolt torque	20 ft-lbs (27 Nm)	

Brakes

Brake disk flatness	Within 0.068 in. (1.727 mm)	
Piston O.D.	2.6245 to 2.6255 in. (66.662 to 66.688 mm)	
Piston cylinder I.D.	2.6280 to 2.6310 in. (66.751 to 66.827 mm)	
Brake valve plunger O.D.	0.5595 to 0.5605 in. (14.211 to 14.237 mm)	
Brake valve plunger bore I.D.	0.5610 to 0.5630 in. (14.249 to 14.275 mm)	
Manual brake piston O.D.	0.9330 to 0.9350 in. (23.698 to 23.749 mm)	
Manual brake piston bore I.D.	0.9365 to 0.9375 in. (23.787 to 23.800 mm)	
Brake valve plunger return spring compression	1.6875 in. (42.86 mm) at 39 to 47 lbs. (173 to 209 N)	
Pedal bushing I.D.	0.749 to 0.753 in. (19.02 to 19.13 mm)	
Brake inlet valve assembly torque	40 ft-lbs (54 Nm)	
Pedal height	5.75 to 5.87 in. (146 to 149 mm) above foot rest	
Accumulator piston O.D.	2.993 to 2.996 in. (76.02 to 76.10 mm)	
Accumulator cylinder I.D.	2.998 to 3.001 in. (76.15 to 76.23 mm)	
Inner thermal relief valve spring compression	0.84 in. (21.3 mm) at 5.8 to 7.2 lbs. (25 to 32 N)	
Outer thermal relief valve spring compression	1.00 in. (25.4 mm) at 37.8 to 46.2 lbs. (168 to 206 Nm)	
Inlet check valve spring compression	0.22 in. (5.6 mm) at 1.55 to 1.95 lbs. (6.9 to 8.7 Nm)	

Rockshaft and Implement Hitches

Rockshaft flow control valve flow - 8630 Tractor	15.5 to 16.5 gpm (0.98 to 1.04 L/s) at 1900 rpm and 2000 psi (137.8 Bar)	
- 8430 Tractor	14 to 15 gpm (0.88 to 0.95 L/s) at 1900 rpm and 2000 psi (137.8 Bar)	
Surge relief valve opening pressure	2650 to 3000 psi (182.7 to 206.8 Bar)	
Thermal relief valve opening pressure	3550 to 3950 psi (244.8 to 272.4 Bar)	
(NOTE: See 70-30-10 for rockshaft adjustments)		
Throttle valve spring compression	0.75 in. (19 mm) at 0.5 to 0.7 lbs. (2.2 to 3.1 N)	
Surge relief valve spring compression	1.114 in. (28.29 mm) at 130 to 150 lbs. (578 to 667 N)	
Rockshaft piston O.D.	4.3710 to 4.3730 in. (111.02 to 111.07 mm)	
Rockshaft cylinder I.D.	4.3735 to 4.3765 in. (111.09 to 111.16 mm)	
Left-hand rockshaft O.D.	3.6220 to 3.6240 in. (91.999 to 92.024 mm)	
Left-hand rockshaft bushing I.D.	3.6265 to 3.6315 in. (93.129 to 93.229 mm)	
Right-hand rockshaft O.D.	3.2470 to 3.2490 in. (82.474 to 82.525 mm)	
Right-hand rockshaft bushing I.D.	3.2515 to 3.2565 in. (82.558 to 82.715 mm)	
Flow control valve O.D.	0.6530 to 0.6534 in. (16.586 to 16.596 mm)	
Flow control valve bore I.D.	0.6539 to 0.6549 in. (16.609 to 16.634 mm)	
Control valve O.D.	0.7480 to 0.7490 in. (18.999 to 19.024 mm)	

Item	New Part Specification	Wear Tolerance

Rockshaft and Implement Hitches—Cont.

Control valve bore I.D.	0.7500 to 0.7520 in. (19.050 to 19.101 mm)
Load control valve piston O.D.	0.6247 to 0.6253 in. (15.867 to 15.882 mm)
Load control valve O.D.	0.2503 to 0.2509 in. (6.3855 to 6.3928 mm)
Load control valve body I.D. at piston	0.6257 to 0.6263 in. (15.892 to 15.908 mm)
Load control valve body I.D. at valve	0.2514 to 0.2524 in. (6.3855 to 6.4109 mm)
Load control valve body O.D.	0.8720 to 0.8730 in. (22.148 to 22.174 mm)
Springs	
Flow control valve - compression	0.90 in. (23 mm) at 12.6 to 15.4 lbs. (56 to 68.5 N)
Control valve - compression	1.06 in. (26.9 mm) at 7.0 to 9.0 lbs. (31.1 to 40.0 N)
Thermal relief valve - compression	0.45 in. (11.4 mm) at 12.3 to 15.3 lbs. (54.7 to 68.06 N)
Valve cam operating - extension	3.35 in. (85.1 mm) at 32.5 to 39.5 lbs. (144.6 to 175.7 N)
Load selector lever - extension	3.35 in. (85.1 mm) at 32.5 to 39.5 lbs. (144.6 to 175.7 N)
Load control valve - compression	1.62 in. (41.1 mm) at 88.2 to 107.8 lbs. (392 to 479.5 N)
Initial load control valve adjustment	8.36 in. (212.5 mm) overall length
Friction device force	4 to 5 lbs. (17 to 22 N)
Load sensing cylinder valve spring - compression	0.65 in. (16.5 mm) at 2.5 to 3.1 lbs. (11.1 to 13.8 N)
Load sensing cylinder inner spring - compression	2.70 in. (52.4 mm) at 324 to 396 lbs. (1441 to 1761 N)
Load sensing cylinder outer spring - compression	2.70 in. (52.4 mm) at 486 to 594 lbs. (2162 to 2651 N)
Torques	
Rockshaft piston cover	170 ft-lbs (230 Nm)
Lift arms	300 ft-lbs (407 Nm) - initial 270 to 330 ft-lbs (366 to 447 Nm) - final
Quill	100 ft-lbs (136 Nm)
Rockshaft housing to transmission case	85 ft-lbs (115 Nm)
Sensing cylinder end	35 ft-lbs (47 Nm)
Sensing cylinder piston nut	185 ft-lbs (251 Nm)
Draft arm	170 ft-lbs (230 Nm)
Drawbar front support to rear hinge	300 ft-lbs (407 Nm)
Drawbar rear support to bracket	300 ft-lbs (407 Nm)
Bracket to transmission case	445 ft-lbs (603 Nm)
Drawbar strap to drawbar	250 ft-lbs (339 Nm)
Load sensing cylinder bracket to transmission case	35 ft-lbs (47 Nm)
Rockshaft tie rods	100 ft-lbs (136 Nm)
Center link attaching bracket cap screws	300 ft-lbs (406 Nm) (40.6 kgm)
Pin with handle-to-Quik-Coupler	85 ft-lbs (115 Nm) (11.5 kgm)
Quik-Coupler-to-hook cap screws	300 ft-lbs (407 Nm) (40.7 kgm)
Tie rod front nut	199 ft-lbs (270 Nm) (27 kgm)
Tie rod nut against piston cover	89 ft-lbs (120 Nm) (12 kgm)
Tie rod rear jam nut	199 ft-lbs (270 Nm) (27 kgm)
Lift assist pin to lift arm	35 ft-lbs (47 Nm) (4.7 kgm)
Lift assist cylinder-to-support nut	185 ft-lbs (250 Nm) (25 kgm)
Sensing Cylinder to Draft Arm	
8630	Hole Number III
8430	Hole Number II

Item	New Part Specification	Wear Tolerance

Selective Control Valve, Breakaway Coupler, and Remote Cylinders

Test flow	3 to 18 gpm (0.19 to 1.13 L/s) at 1700 to 1800 rpm and 1500 psi (103.4 bar)	
Early Model		
Flow control valve stop pin exposed length	0.9375 in. (23.810 mm)	
Pressure valve spring compression	1.25 in. (31.8 mm) at 36-44 lbs. (160-190 N)	
Return valve spring compression	1.25 in. (31.8 mm) at 19-23 lbs. (84-102 N)	
Flow control valve spring compression	2.15 in. (54.6 mm) at 41-50 lbs. (180-220 N)	
Detent piston spring compression	1.25 in. (31.8 mm) at 19-23 lbs. (84-102 N)	
Late Model		
Flow control valve stop length	0.9375 in. (23.810 mm)	
Pressure valve spring compression	1.20 in. (30.5 mm) at 36-44 lbs. (160-196 N)	
Return valve spring compression	1.20 in. (30.5 mm) at 18-22 lbs. (80-98 N)	
Flow control valve spring compression	2.15 in. (55 mm) at 41-50 lbs. (182-222 N)	
Detent piston spring compression	1.25 in. (31.8 mm) at 19-23 lbs. (85-102 N)	
Pressure valve adjustment	0.048-0.080 in. (1.22-2.03 mm) - 2 in. on arm	
Return valve adjustment	0.008-0.040 in. (0.20-1.02 mm) - 2 in. on arm	
Flow control valve O.D.	0.7480-0.7490 in. (18.99-19.03 mm)	
Metering valve O.D.	0.6235-0.6245 in. (15.84-15.86 mm)	
Selective control valve cap-to-housing cap screw torque	35 ft-lbs (47 Nm)	
Remote cylinder piston rod guide torque	35 ft-lbs (47 Nm)	
Remote cylinder piston rod nut torque	300 ft-lbs (407 Nm)	
Remote cylinder end cap torque	85 ft-lbs (115 Nm)	

SPECIAL TOOLS

Number	Name	Use
JDE-28*	Speed Indicator Adapter	Check engine speed for hydraulic tests
D-01006AA* (JDM-16)	Bench Fixture	Hold hydraulic pump for repairs
JDH-21*	Parts Tray	Hold hydraulic pump parts
JDH-40*	Seat Puller	Remove hydraulic pump discharge valve seats
JDH-39*	Seat Driver	Install hydraulic pump discharge valve seats
JDH-18*	Driver	Install hydraulic oil pump seal
JDH-19 or 19A*	Adjusting Tool	Adjust hydraulic pump crankcase outlet valve
D-05155ST	Oil Transfer Unit	To facilitate oil handling
JDG-17*	Puller	Removing steering wheel
JDH-42-2*	Alignment Dowels	Assemble steering metering pump
JDH-46*	Plug	Test steering valve
ND-925, D15010NU, D15011NU, or D15012NU	Accumulator Charging Kit	Charge brake accumulator with dry nitrogen
JDH-53*	Filter Relief Valve Removal Tool	Valve removal
JDH-43*	Rockshaft Thermal Relief Valve Test Kit	Test rockshaft system operation
JDH-44*	Test Block	Test rockshaft system operation
D-01045AA* (27797)	Bushing Driver Set	Install oil seals and bushings
JDH-45*	Driver	Install lift-assist cylinder wiper seal
D-15002NU* (NJD150)	Valve Seat Repair Kit	Repair selective control valve seats
JDH-28*	Driver	install inner detent piston guide
JDH-15C*	Adjusting Cover	Adjust selective control valves

Hydraulic Test Fittings

D-15017NU*	Hydraulic Flow Test Meter
D-15022NU*	Hydraulic Fitting Kit
D-15027NU*	Pressure Test Kit

**Order from: Service Tools, Box 314, Owatonna, Minnesota 55060*

Litho in U.S.A.

Litho in U.S.A.

Section 80
SOUND-GARD BODY

CONTENTS OF THIS SECTION

Page

GROUP 5 - SEPARATION
General Information 5-3
Removal 5-3
Installation 5-5

GROUP 10 - AIR CONDITIONING
System Operation 10-1
System Cycle 10-2
Component Check 10-3
Superheat Shutoff Switch 10-3
Thermal Fuse 10-4
Schraeder Valves 10-4
Refrigerant Couplings 10-6
Compressor 10-7
Receiver-Dryer 10-8
Regulatory Controls 10-8
Expansion valve 10-8
Thermostatic Temperature Control Switch 10-8
Compressor Relief Valve 10-9
Air Conditioning System Tests and Diagnosis 10-10
Preliminary Checks 10-10
Electrical Operational Checks 10-10
Safety Pressure Checks 10-10
Safety Precautions 10-11
Discharging the System 10-30
Flushing the System 10-30
Adding Refrigerant Oil to the System 10-31
Purging the System 10-32
Evacuating the System 10-32
Charging the System 10-33
Leak Testing 10-34
Refrigerant Couplings 10-35
Disassembly 10-35
Repair 10-35
Assembly 10-35
Compressor Removal 10-36
Leak Testing Compressor 10-36
Volumetric Efficiency Test 10-36
Shaft Seal Leak Test 10-37
Compressor Clutch and Shaft Seal Assembly 10-38
Disassembly 10-39
Assembly 10-42

Page

Checking and Adding Compressor Oil 10-46
When Servicing Compressor 10-46
When Servicing System Components other than Compressor 10-47
Compressor Installation 10-47
Condenser, Receiver-Dryer and Evaporator 10-48
Condenser 10-48
Removal 10-48
Repair 10-48
Installation 10-48
Receiver-Dryer 10-49
Removal 10-49
Repair 10-49
Installation 10-49
Evaporator 10-50
Removal 10-50
Repair 10-50
Installation 10-50
Regulator Controls 10-51
Expansion Valve 10-51
Removal 10-51
Repair 10-52
Installation 10-52
Temperature Control Switch 10-52
Removal 10-52
Testing 10-52
Installation 10-53
Compressor Relief Valve 10-53
Removal 10-53
Repair 10-53
Installation 10-53
Air Intake System 10-54
Pressurizer Blowers and Switch 10-54
General Information 10-54
Blower Removal 10-54
Repair 10-54
Installation 10-54
Blower Switch Removal 10-55
Repair 10-55
Installation 10-55
Air Filters 10-55
Removal 10-55
Service 10-55
Installation 10-55

Litho in U.S.A.

CONTENTS OF THIS SECTION—Continued

Page

GROUP 15 - HEATING SYSTEM
System Operation 15-1
Diagnosis and Testing 15-2
System Components
Heater Valve 15-3
Heater Core 15-3
Heater Blowers 15-4
Heater Pipes and Hoses 15-4

GROUP 20 - SEAT
General Information 20-1
Swivel and Latch Assembly 20-2
Armrest Assembly 20-3
Cushions and Seat Belts 20-4
Seat Support Assembly 20-5
Suspension Assembly 20-7

GROUP 25 - MISCELLANEOUS COMPONENTS
Sound-Gard Body Frame 25-1
Body Door and Exterior Panels 25-2
Glass and Attaching Hardware;
Moldings and Seals 25-12
Control Support With
Covers and Cowl 25-14
Headliner and Upholstery 25-15
Radio, Tape Player, and
Windshield Wiper Motors 25-15

GROUP 30 - SPECIFICATIONS, AND SPECIAL TOOLS
Specifications
Separation 30-1
Air Conditioning System 30-1
Heating System 30-2
Seat 30-2
Miscellaneous Components 30-2
Cap Screw Torque Chart 30-3
Special Tools 30-3

Litho in U.S.A.

Group 5
SEPARATION

GENERAL INFORMATION

The Sound-Gard Body is designed to be a module; that is, it contains the Control Island, seat, floor, air conditioning and/or heating units, and all operator's controls in one complete unit. Four large mounts are used to reduce noise and shock to the operator.

Seldom will it be necessary to remove the Sound-Gard Body in order to service the tractor. However, if there is physical damage to the front hinge or to the Sound-Gard Body (or possibly some other reason), removal of the body will be required.

REMOVAL

⚠ CAUTION: Before separating the Sound-Gard Body from the tractor, be sure that the brake accumulator is discharged. The accumulator can be discharged by opening the right-hand brake bleed screw, and holding the brake pedal down for a few minutes. Make sure no one is close to tractor when starting engine or that no one works around hinge with the engine running.

Remove the air intake pipe, muffler, and hood. Drain the cooling system, and disconnect the battery ground cable.

From inside the Sound-Gard, remove the floor mat, foot rest panel (A, Fig. 1), and bottom floor panel (B).

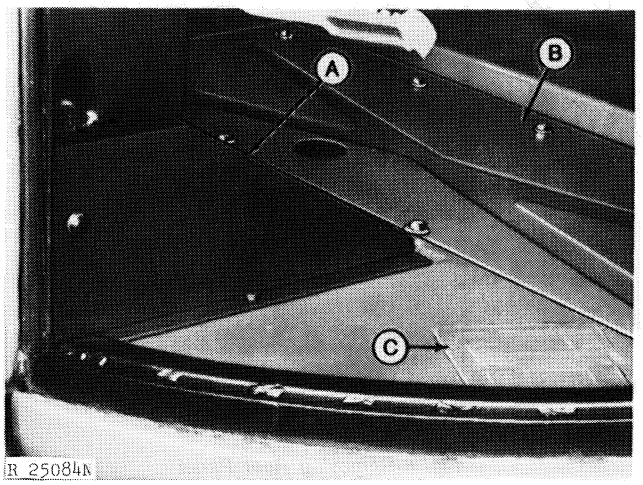

A—Foot Rest Panel
B—Floor, Panel
C—Sealing Tape

Fig. 1-Panels

Disconnect the Quad-Range operating rod yoke (Section 10, Group 25).

Disconnect the speed control linkage at turnbuckle just forward of the clutch housing. Disconnect speed control cable from clamp located under the Sound-Gard at the front edge (Fig. 2 of Section 30, Group 20), by reaching in through the foot rest panel hole.

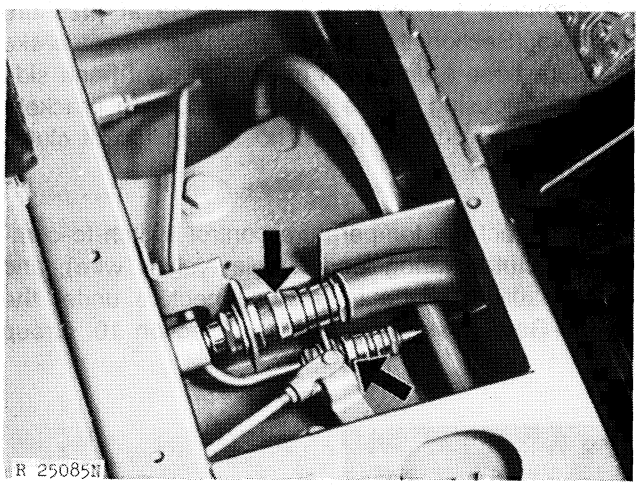

Fig. 2-Refrigerant Couplings

Disconnect the air conditioning lines at couplings (Fig. 2).

Disconnect PTO and clutch valve operating rods (E, Fig. 3) at pressure regulating valve housing.

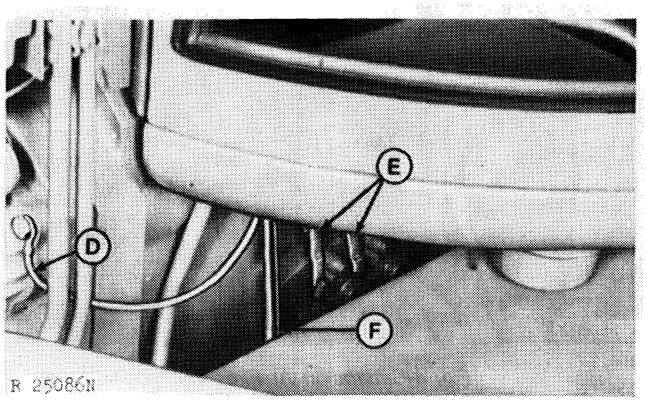

D—Ground Wire
E—Operating Rods
F—Return Hose

Fig. 3-Left-Hand Side Removal Steps

Disconnect the metering pump oil return hose (F) at valve housing.

Disconnect the Sound-Gard Body ground wire (D) at the starter mounting flange.

Disconnect the selective control valve, rockshaft, and transmission shifter cables (Section 10, Group 25). Wire cables to back of Sound-Gard, out of the way for removal.

Disconnect the fuel shut-off cable and tachometer cable (Section 10, Group 25). Disconnect heater hoses.

Disconnect the brake pressure hose at pressure manifold (Section 10, Group 25). Disconnect brake pressure hose at fitting on bracket at right-hand side of clutch housing (brake valve-to-mounting bracket), and disconnect brake return hose from top of clutch housing.

Disconnect the temperature control switch-to-compressor clutch wiring lead (single, yellow wire), and front headlight wiring lead at connectors under the Sound-Gard at right-front corner (Section 10, Group 25).

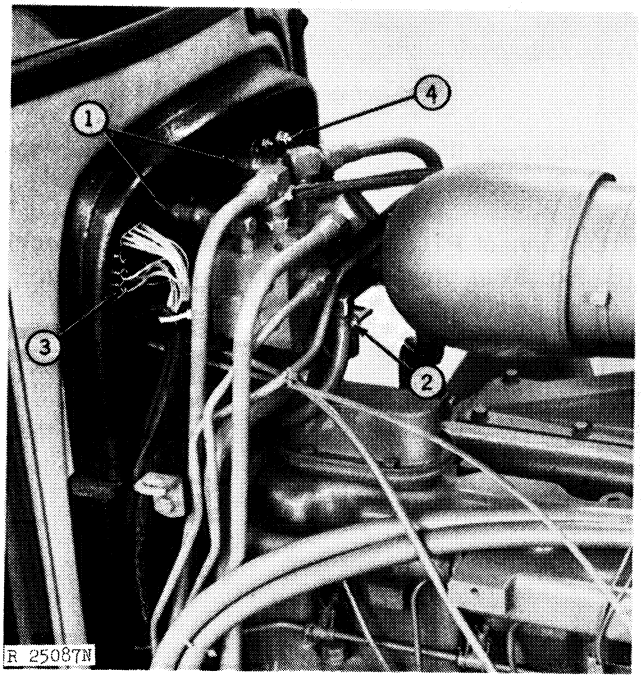

Fig. 4-Separation At Fire Wall

At the top of fire wall (Fig. 4):

(1) Disconnect both steering valve-to-metering pump pressure hoses at rear side of valve.

(2) Disconnect the return oil hose from front side of steering valve.

(3) Disconnect the lower main wiring connector.

(4) Disconnect starter circuit relay switch from fire wall by removing the two screws which secure the switch to the fire wall. Disconnect the primary wiring lead.

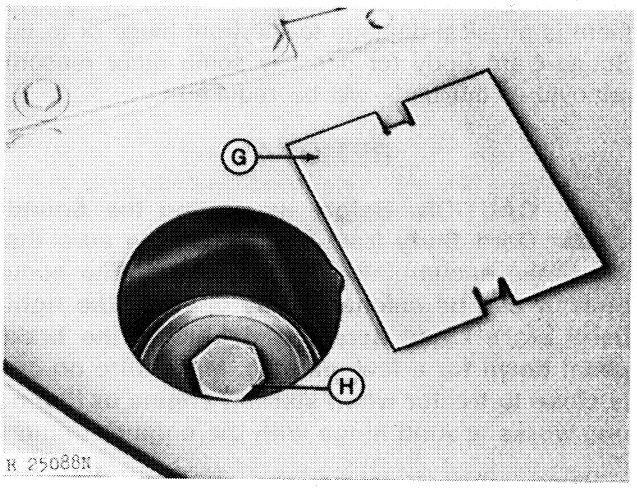

G—Cover Plate **H—Mounting Screw**

Fig. 5-Cover Plate and Screw

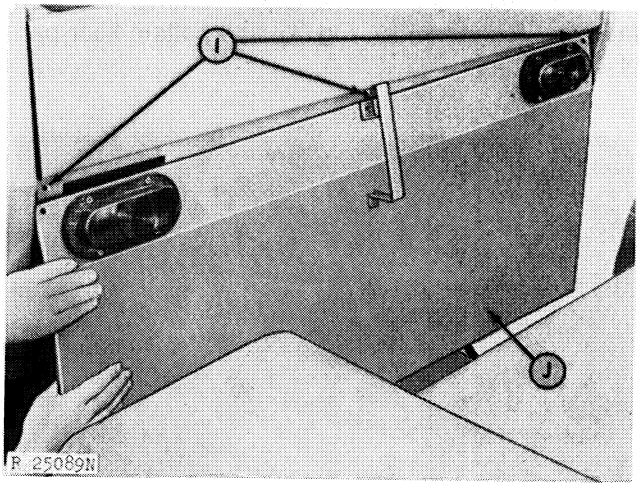

I—Retaining Screw Locations **J—Rear Panel**

Fig. 6-Removing Rear Panel

Remove sealing tape (C, Fig. 1) from cover plate (G, Fig. 5) on front mounts. Loosen lock nut (underneath body support next to fuel tank), and remove the front mounting screws (H).

Remove the rear panel (J, Fig. 6). On early models, remove the SMV emblem and remove the five retaining screws from the top edge of panel. Note that there are two screws in each tail light and one screw in the SMV bracket. On late models, remove the SMV emblem and remove three retaining screws (I) from top edge of panel.

On all models, loosen the panel retaining screws at the left and right bottom corners. Carefully pull panel away from body far enough to disconnect the wiring lead (M, Fig. 7) for each tail light, and remove panel.

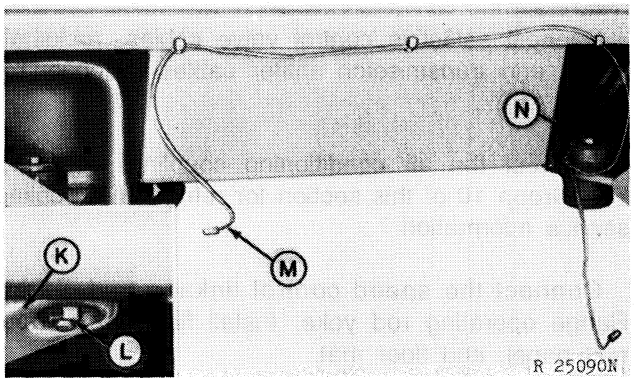

K—Body Support
L—Lock Nut
M—Wiring Lead
N—Mounting Screw

Fig. 7-Rear Mounting Screws

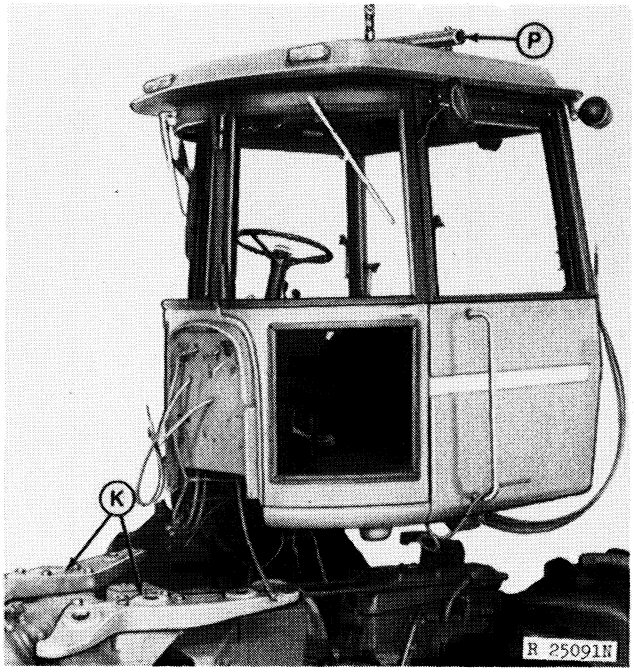

K—Body Supports
P—JDG-15 Lifting Bar

Fig. 8-Removing Sound-Gard Body

Loosen lock nut (L, Fig. 7) from underneath support (K), and remove the rear mounting screws (N).

Remove the two cap screws from top of Sound-Gard Body roof, and install JDG-15 Lifting Bar (P, Fig. 8). Connect hoist to lifting bar.

Lift body from tractor and place on JDG-10-2 Sound-Gard Body Support Stand equipped with a JDG-14 Adapter to receive the body.

INSTALLATION

Position Sound-Gard over body supports. Install mounts, using Fig. 9 or Fig. 10 as a guide for installation. Lubricate rubber mounts with a liquid soap or similar lubricant to help seat the mounts.

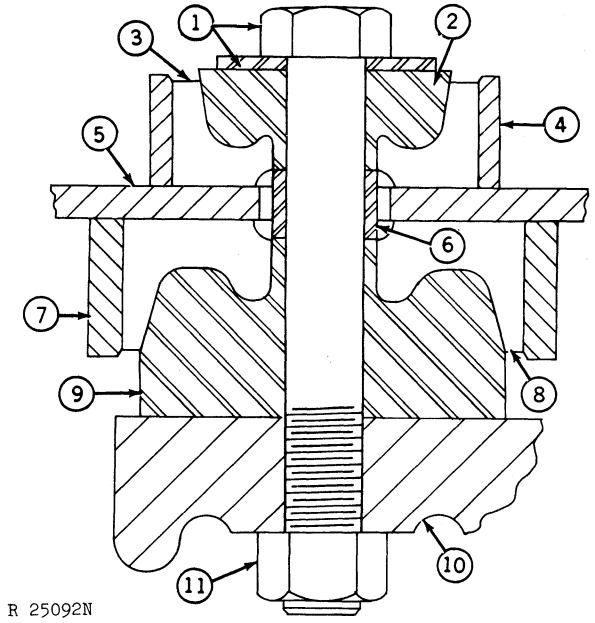

1—Cap Screw and Washer
2—Upper Insert
3—Upper Mount
4—Upper Sleeve
5—Body Frame
6—Spacer
7—Lower Sleeve
8—Lower Mount
9—Lower Insert
10—Body Support
11—Lock Nut

Fig. 9-Sound-Gard Body Mounts (Early Models)

Lubricate mounting screw threads, and install screws. Tighten screws to 100 ft-lbs (136 Nm) torque. Install lock nuts and tighten securely.

INSTALLATION (Continued)

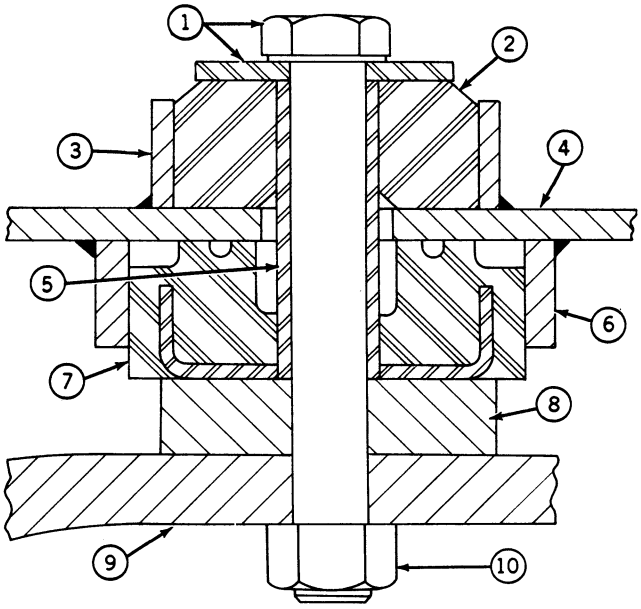

R 25093N

1—Cap Screw and Washer
2—Upper Mount
3—Upper Sleeve
4—Body Frame
5—Spacer
6—Lower Sleeve
7—Lower Mount
8—Special Washer
9—Body Support
10—Lock Nut

Fig. 10-Sound Gard Body Mounts (Later Models)

Install rear panel (Fig. 6) and SMV emblem. Install cover plates for the front mounting screws (Fig. 5), and seal with tape.

Connect hoses and wiring at fire wall (Fig. 4). Connect PTO and clutch valve operating rods, oil return hose, and ground wire (Fig. 3).

Connect wiring leads at right-front corner of Sound-Gard (Section 10, Group 25).

Connect brake pressure and return hoses, heater hoses (supply hose has a white stripe), tachometer cable, and fuel shut-off cable.

Connect selective control valve cables, rockshaft cable, and transmission shifter cables (Section 10, Group 25).

Connect the air conditioning couplings (Fig. 2). See Group 10 of this section for refrigerant coupling service information.

Connect the speed control linkage and Quad-Range operating rod yoke. Install floor panel, foot rest panel, and floor mat.

Install hood, air stack, and muffler. Be sure to connect aspirator hose to muffler.

Group 10
AIR CONDITIONING SYSTEM

AIR CONDITIONING SYSTEM OPERATION

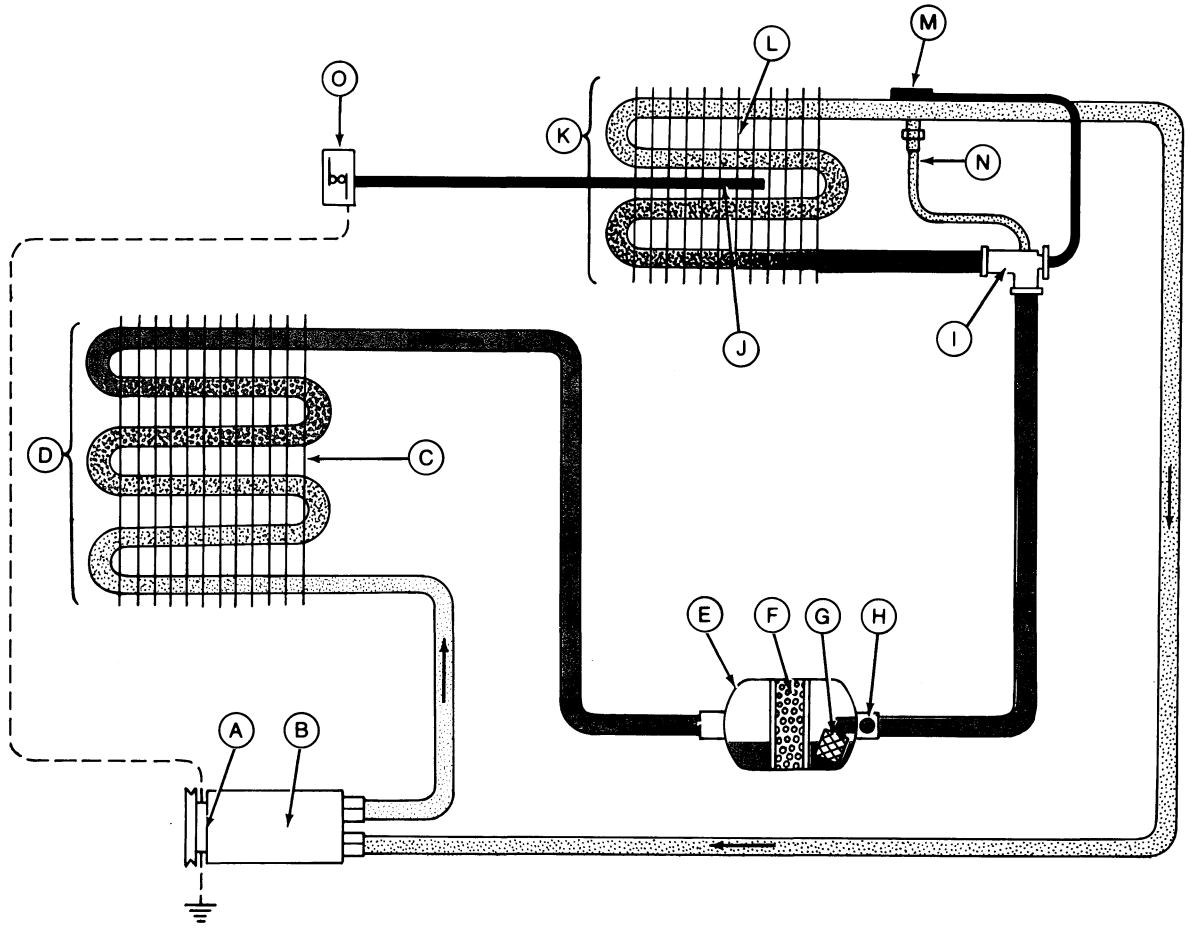

R.31541C

A—Magnetic Clutch
B—Compressor
C—Condenser
D—Heat Transfer From Refrigerant Gas To Outside Air At Condenser
E—Receiver-Dryer
F—Desiccant
G—Pickup Tube
H—Sight Glass
I —Expansion Valve
J —Sensing Tube
K—Heat Transfer From Cap Air To Refrigerant Gas At Evaporator
L —Evaporator
M—Temperature Sensing Tube
N—External Equalizer Line
O—Temperature Control Switch
High Pressure Liquid
High Pressure Gas
Low Pressure Liquid
Low Pressure Gas
Temperature Sensing Tube Gas

Fig. 1-Schematic of Air Conditioning System

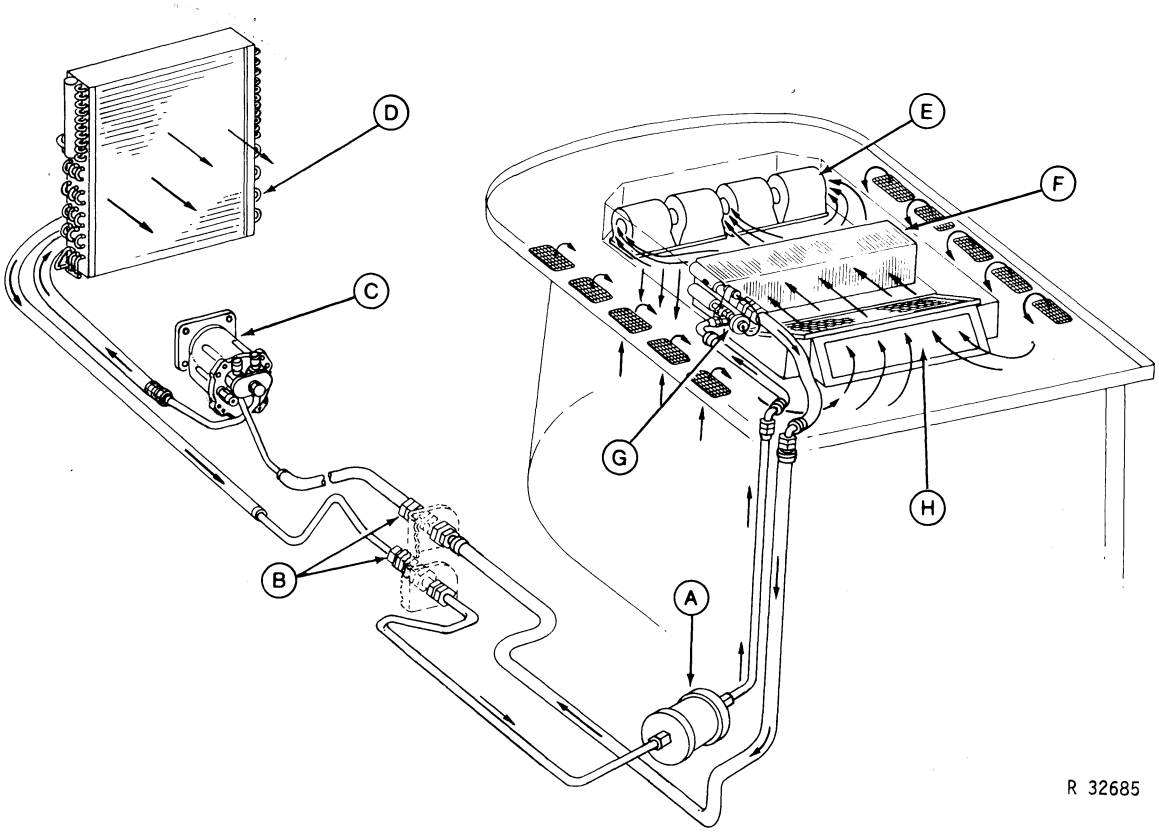

A—Receiver-Dryer
B—Couplers
C—Compressor
D—Condenser
E—Pressurizer Motors and Blower
F—Evaporator
G—Expansion Valve
H—Air Filter

Fig. 2-Air Conditioning System

THE SYSTEM CYCLE

Referrring to Fig. 1, the compressor (C) draws low pressure refrigerant from the evaporator (F) and compresses it to a high pressure. Increasing the pressure of the refrigerant causes its boiling point to rise to a temperature higher than that of the outside air.

As the high pressure gas passes through the condenser (D), heat is removed from the gas and transferred to the cooler outside air being forced through the condenser core. This permits the refrigerant gas to cool sufficiently to condense into a liquid (still under high pressure).

The high pressure liquid then passes through the receiver-dryer (A), where contaminants such as moisture, acids, or solids are removed by a special filter. The receiver-dryer also acts as a storage reservoir for refrigerant until demanded by the evaporator.

The evaporator is where the actual cooling and drying of warm, moist cab air takes place. The flow of refrigerant entering the evaporator is regulated by a diaphragm-type valve, called an expansion valve (G). This valve uses an orifice to reduce the flow of high pressure liquid refrigerant into the evaporator, causing the refrigerant pressure and temperature to drop.

Warm cab air, pulled over the evaporator by the pressurizer blowers, gives up its heat to the cooler refrigerant, thereby cooling the air and causing the refrigerant to boil, or vaporize. Because the pressure in the evaporator is low, the boiling point of the refrigerant is also low.

Moisture (in the air) is collected on the evaporator core during the cooling process and drained away. With the cab air cooled and dehumidified, the desired effect has been produced and the cycle is now complete.

The expansion valve and a thermostatic temperature control switch (O, Fig. 1) are the two controls used in the air conditioning system to maintain the proper cooling balance.

A temperature sensing bulb (M, Fig. 1) is connected to the expansion valve by means of a capillary tube filled with a low pressure gas. The sensing bulb

is clamped to the evaporator outlet pipe and is well insulated from external heat sources. Too little or too much refrigerant passing through the expansion valve into the evaporator, will limit the cooling efficiency of the system.

If too little refrigerant passes through the expansion valve, the refrigerant gas will become too hot, permitting the gas in the sensing bulb to expand enough to open the expansion valve.

If too much liquid refrigerant passes through the expansion valve, some of the liquid will still be vaporizing as it leaves the evaporator. This lowers the temperature at the outlet, which in turn lowers the temperature of the gas in the sensing bulb and allows the expansion valve to close.

The thermostatic temperature control switch is a rotary type switch that is connected to a temperature sensing tube inserted in the evaporator core. The switch end of the gas-filled sensing tube has a diaphragm which controls two external contacts wired to the compressor clutch. When the cab air needs to be cooled, corresponding to the preselected control setting, the compressor will turn on. The compressor will continue to function until the selected temperature is reached.

ELECTRICAL TESTING

Wiring Diagrams

Refer to Section 40 for wiring diagrams on the air conditioning system.

Component Check

When an electrically operated component in the system fails to function, make the following preliminary checks:

1. Determine if adequate voltage is being supplied to the air conditioning system.

2. Visually check for a loose connection or a broken wire.

If, after making the preliminary checks, the source of trouble has not been found, test the system for an open circuit within each component.

Superheat Shutoff Switch

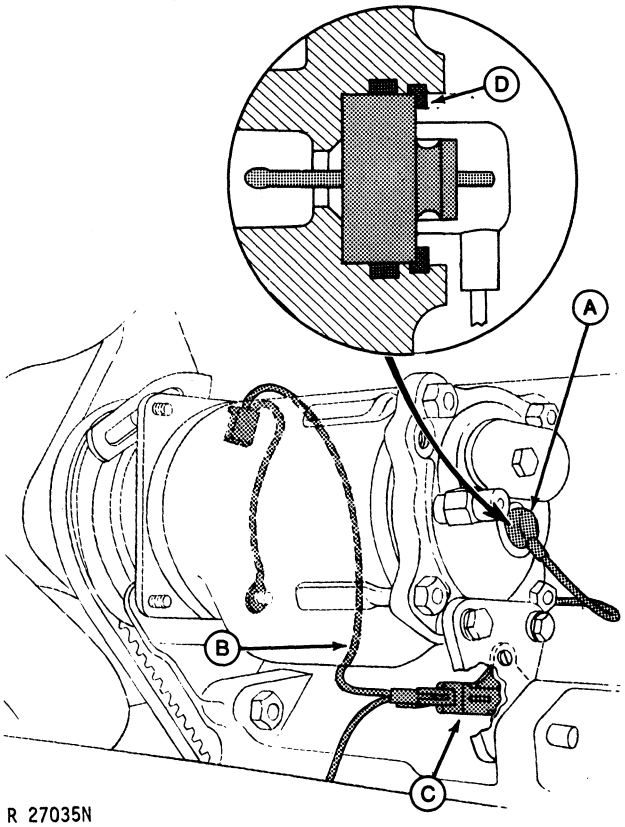

A—Superheat Shutoff Switch **C—Thermal Fuse**
B—Wiring Harness **D—Snap Ring**

Fig. 3-Superheat Shutoff Switch

1. Disconnect the wiring lead from the superheat shutoff switch (A, Fig. 3).

2. Connect one lead of a test light on the superheat shutoff switch terminal, and the other lead to a power supply.

If the bulb lights the superheat shutoff switch is defective.

NOTE: When replacing the superheat shutoff switch, the snap ring (D, Fig. 3) must be installed with the convex side toward the switch to provide a positive seat and the electrical ground.

Thermal Fuse

1. Disconnect the wiring harness (B, Fig. 3) from the thermal fuse (C).

2. Install a continuity tester between terminals marked "B" and "C" on thermal fuse (Fig. 4).

If tester shows continuity, the thermal fuse is good. If no continuity, the fuse is blown and must be replaced.

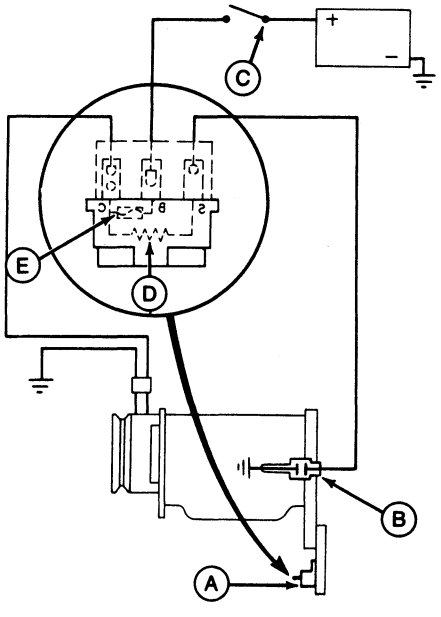

R 27036N

A—Thermal Fuse
B—Superheat Shutoff Switch
C—Air Conditioning Switch
D—Resistance-type Heater
E—Fuse Link

Fig. 4-Thermal Fuse

Schrader Valves

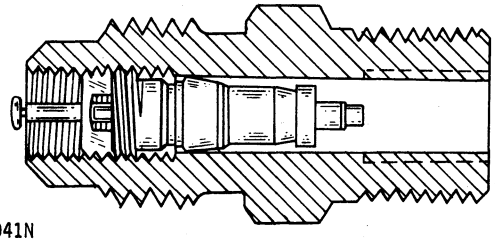

R 27041N

Fig. 5-Schrader Valve

When the fitting in the end of the service hose is screwed onto the Schrader valve (Fig. 5), a pin is depressed in the center of the valve allowing pressure to be read on the gauges. When the fitting is removed, the valve closes.

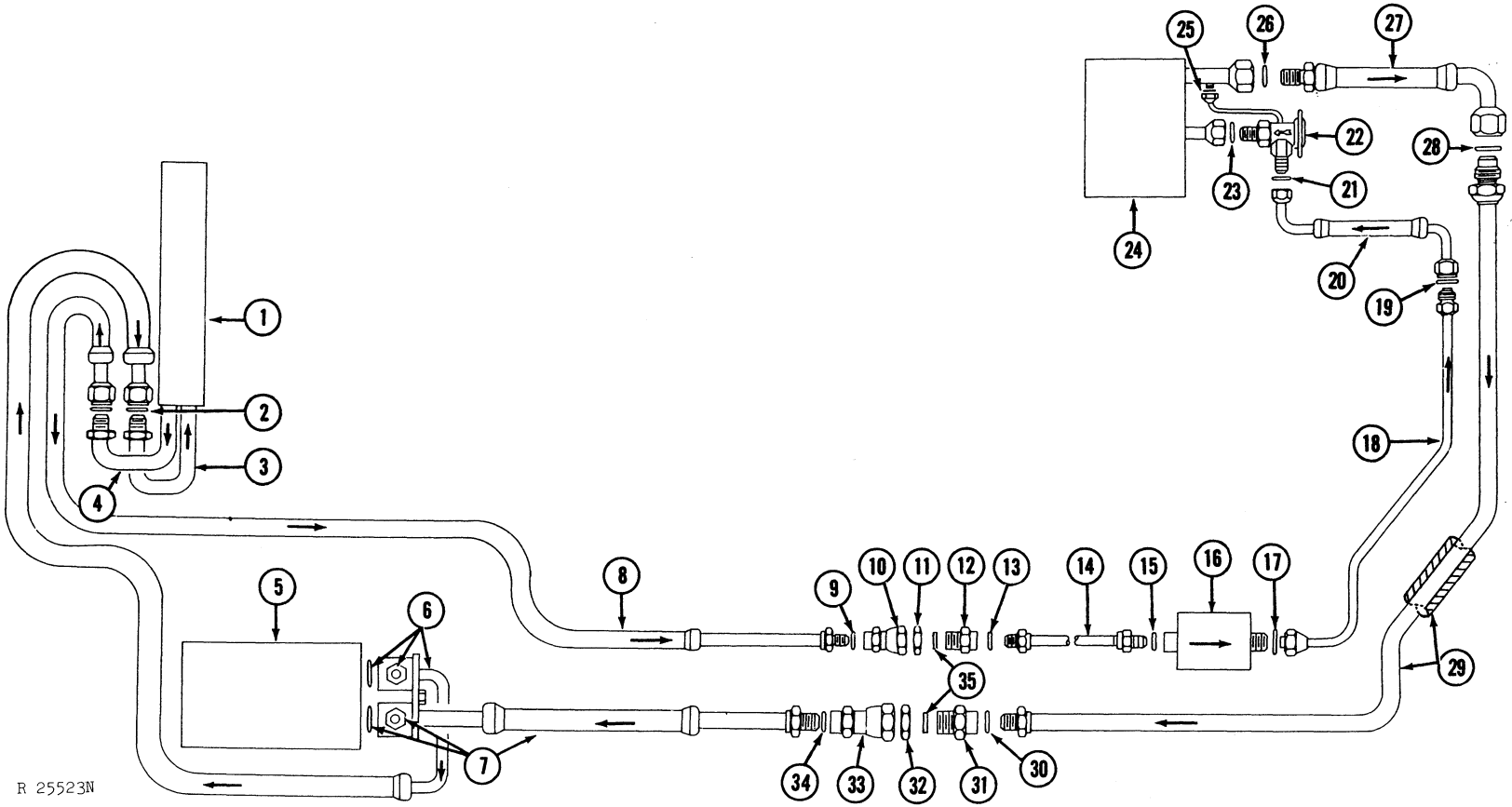

1—Condenser
2—O-Ring
3—Condenser Inlet
4—Condenser Outlet
5—Compressor
6—Compressor Outlet Line (Pressure) With Refrigerant Valve and O-Ring
7—Compressor Inlet Line (Suction) With Refrigerant Valve and O-Ring
8—Condenser Outlet Line
9—O-Ring
10—Refrigerant Coupling Half (Female, Pressure)
11—Lock Nut
12—Refrigerant Coupling Half (Male, Pressure)
13—O-Ring
14—Coupling-To-Receiver-Dryer Pipe
15—O-Ring
16—Receiver-Dryer
17—O-Ring
18—Evaporator Pressure Pipe
19—O-Ring
20—Evaporator Pressure Line
21—O-Ring
22—Expansion Valve
23—O-Ring
24—Evaporator
25—O-Ring
26—O-Ring
27—Evaporator Return Line
28—O-Ring
29—Evaporator Return Pipe and Insulation
30—O-Ring
31—Refrigerant Coupling Half (Male, Return)
32—Lock Nut
33—Refrigerant Coupling Half (Female, Return)
34—O-Ring
35—Seals

Fig. 6-Schematic of Air Conditioning Lines and Fitting Connections

Litho in U.S.A.

REFRIGERANT COUPLINGS

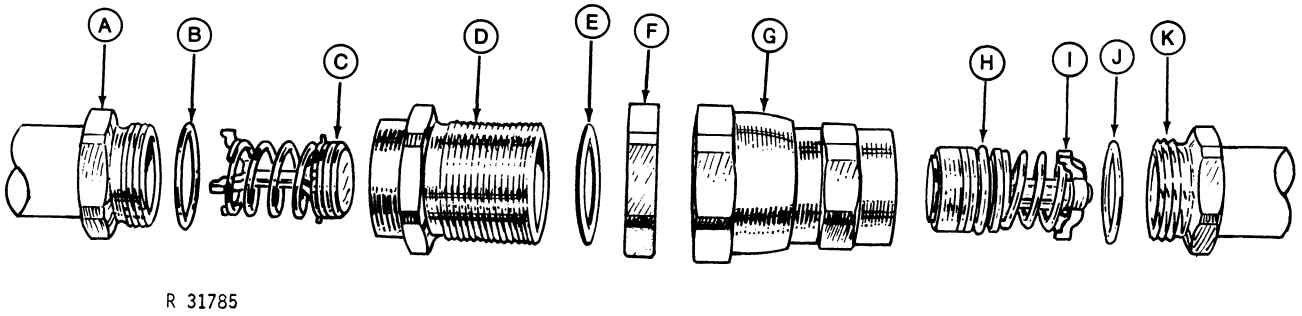

A—Tubing Adapter
B—O-Ring
C—Poppet Valve Assembly
D—Body
E—Gasket Seal
F—Lock Nut
G—Union Nut and Body Assembly
H—O-Ring
I —Valve and Sleeve Assembly
J—O-Ring
K—Tubing Adapter

Fig. 7-Exploded View of Refrigerant Coupling

HOW THE COUPLINGS WORK

Refrigerant couplings (Fig. 7) are used on both the pressure and return sides of the air conditioning system, and are located under the floor panel of the Sound-Gard Body.

When the coupling is disconnected, both halves seal to prevent loss of refrigerant and admission of air or foreign material into the system.

As the two coupling halves are partially connected together by the union nut (G, Fig. 7) the stem valve head of the valve and sleeve assembly (I) contacts the face of the poppet valve assembly (C), expelling air. Body (D) contacts a gasket on the face of sleeve (I) making a seal during the connection.

Tightening the union nut (G) draws the coupling halves together. At the same time, the poppet valve assembly (C) and valve and sleeve assembly (I) are moved to open the fluid passage around the valves. When fully coupled, gasket seal (E) on the recessed face of the body (D) is compressed between faces of coupling bodies (D) and (G) to form a seal. During disconnection, the springs automatically return valves (C) and (I) to their sealing position.

NOTE: Tubing adapters (A) and (K) are brazed to their respective pipes, and therefore are serviced only as an assembly.

COMPRESSOR

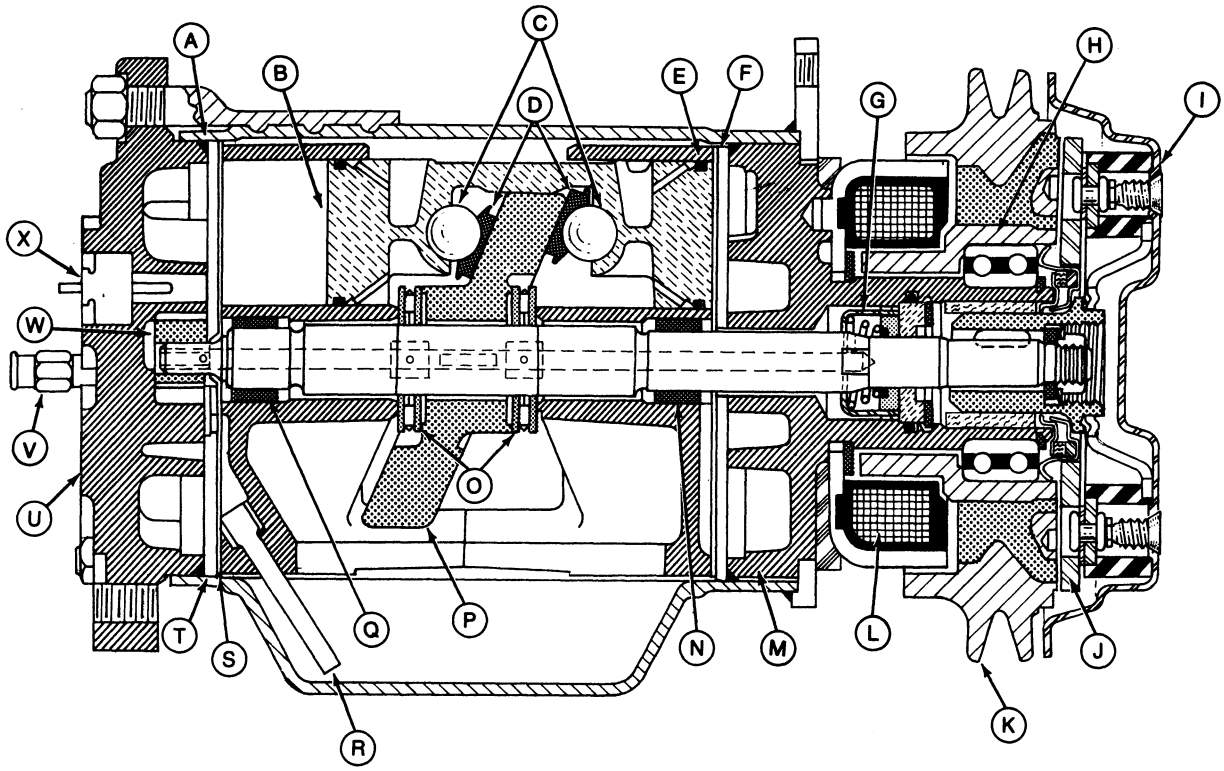

R 27048N

A—O-Ring Seal
B—Piston
C—Drive Ball
D—Ball Shoe
E—Suction Reed
F—Front Discharge Valve Plate
G—Shaft Seal
H—Pulley Bearing
I —Dust Cover
J—Hub and Drive Plate Assembly
K—Pulley
L—Clutch Coil
M—Front Head
N—Mainshaft Front Bearing
O—Mainshaft Thrust Bearing
P—Swash Plate
Q—Mainshaft Rear Bearing
R—Oil Pick-Up Tube
S—Suction Reed
T—Rear Discharge Valve Plate
U—Rear Head
V—Relief Valve
W—Oil Pump
X—Superheat Switch

Fig. 8-Cross-Section of Delco (Frigidaire) Compressor

HOW THE COMPRESSOR WORKS

The compressor is a Delco (Frigidaire), horizontal, 6-cylinder (3-pistons), double-acting type (Fig. 8), and is belt-driven from the engine crankshaft.

Pistons (B) are mounted axially around the compressor shaft and driven by a swash plate (P).

Reed-type suction and discharge valves are mounted in valve plates (S and T) between the cylinder assembly and the head at each end of the compressor. The heads are connected by gas-tight passage ways which direct refrigerant gas to a common outlet.

An oil pump (W) mounted at the rear of the compressor picks up oil from the bottom of the compressor oil sump and pumps the oil to the internal working parts of the compressor.

Operation of the compressor is controlled by the temperature control switch, which electrically controls the magnetic clutch (J) on the compressor.

The compressor is fitted with a high pressure relief valve (V) which opens whenever the compressor discharge pressure exceeds 440 psi (30 bar) (30 kg/cm²).

Litho in U.S.A.

RECEIVER-DRYER

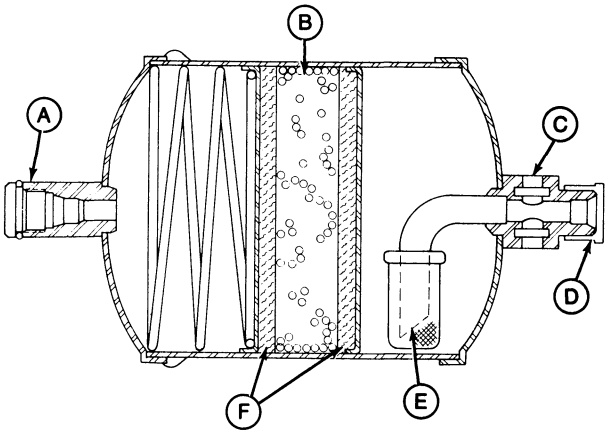

R 25126N

A—Inlet From Condenser
B—Desiccant
C—Sight-Glass
D—Outlet To Expansion Valve
E—Pick-Up Tube
F—Filter Pad

Fig. 9-Cross-Section of Receiver-Dryer

How The Receiver-Dryer Works

The receiver-dryer (Fig. 9), mounted under body on left-hand side, has a two-fold function. First, it receives the high pressure liquid refrigerant from the condenser and stores the liquid until needed by the evaporator. Second, the unit removes harmful moisture (and acids), and filters out solid contaminants.

Solid contaminants are filtered by the strainer-filter pads (F), while moisture and acids are removed by the dessicant material (B) filling the chamber between the filter pads.

The sight glass (C) is incorporated into the receiver-dryer unit, and should be used for checking refrigerant operation.

REGULATORY CONTROLS

EXPANSION VALVE

How The Expansion Valve Works

Liquid refrigerant under high pressure is piped to the expansion valve (B, Fig. 10) from the receiver-dryer. The function of the expansion valve is to regulate the amount of liquid refrigerant entering the evaporator (now under low pressure), depending upon the desired inside temperature. Sensing action which regulates valve action takes place in the temperature sensing bulb (A).

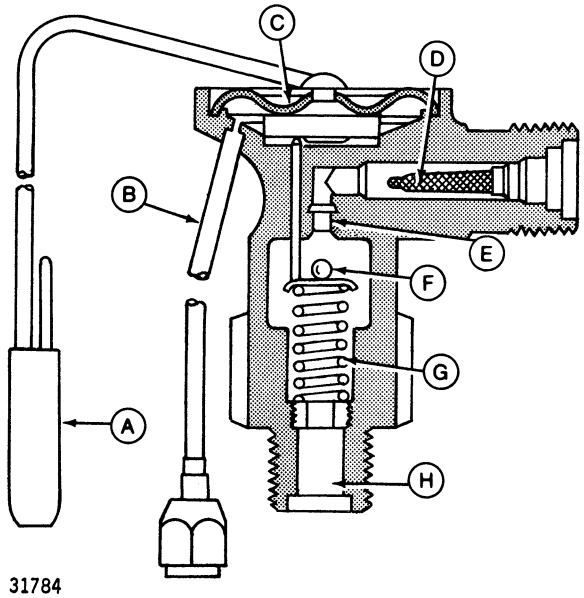

R 31784

A—Sensing Bulb
B—External Equalizer Line
C—Diaphragm
D—Screen
E—Orifice
F—Valve Seat
G—Spring
H—Valve Outlet

Fig. 10-Expansion Valve

The expansion valve has an external equalizer line (B) which allows pressure at the valve outlet (H, or evaporator inlet) to be transmitted to the evaporator side of the diaphragm.

THERMOSTATIC TEMPERATURE CONTROL SWITCH

How The Switch Works

The purpose of the temperature control switch (A, Fig. 11) is to regulate the temperature of the refrigerant in the evaporator corresponding to the control knob setting selected by the operator.

The switch consists of a set of contact points which receives its power from the pressurizer motor switch. The current flows from the temperature switch to the compressor clutch.

The contact points in the temperature switch are controlled by a gas-filled temperature sensing tube (B) having a spring bellows or diaphragm on one end making contact with the point operating mechanism. The other end of the sensing tube is inserted into the core of the evaporator.

Litho in U.S.A.

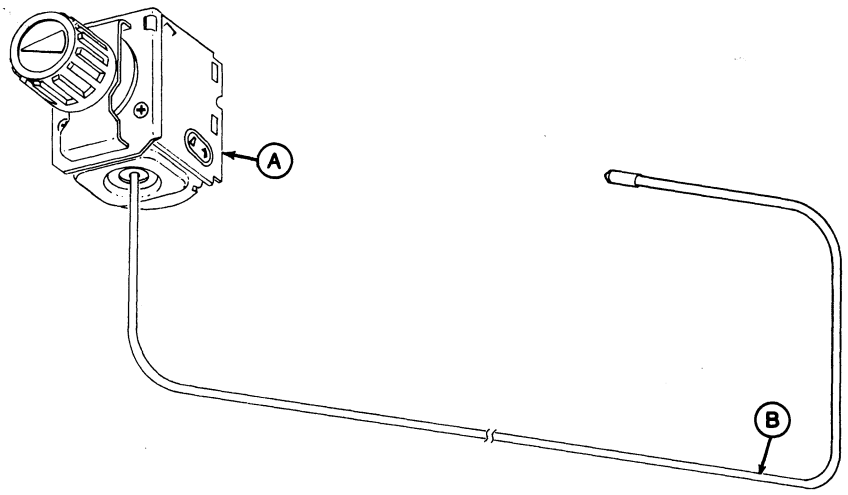

R 31144

A—Temperature Control Switch **B—Sensing Tube**

Fig. 11-Temperature Control Switch

When the control knob is turned on (clockwise), the contact points close, thereby activating the compressor. However, the compressor will not operate unless the pressurizer motors are turned on. As the temperature in the evaporator reaches its specified lower limit, the contact points are allowed to open, which in turn shuts off the compressor. The compressor will remain off until the temperature in the evaporator reaches its specified upper limit. When that limit is reached, the contact points close and the compressor starts operation. In this manner, the compressor turns off and on automatically to satisfy the demands of the evaporator.

Turning the control knob all the way to the left (counterclockwise) manually opens the contact points in the switch housing, stopping compressor operation.

COMPRESSOR RELIEF VALVE

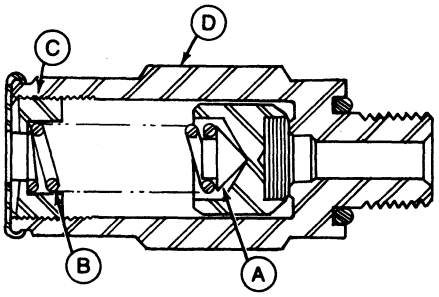

R 28639N

A—Valve Seat **C—Spring Seat**
B—Spring **D—Valve Housing**

Fig. 12-Compressor Relief Valve

The compressor relief valve (Fig. 12) is a pressure regulating control. If the system discharge pressure exceeds 440 psi (30 bar) (30.61 kg/cm²), the valve (A) will open automatically against spring (B) pressure and stay open until the pressure recedes. The valve will then close automatically.

If the relief valve opens, a loud popping noise will be heard. In addition, some oil may be ejected through the valve. Correct any condition that would cause this valve to open.

AIR CONDITIONING SYSTEM TESTS AND DIAGNOSIS

GENERAL INFORMATION

When diagnosing any air conditioning problem, there are three checks that MUST be performed:

Preliminary Checks

Any of the minor problems checked here can produce an incorrect pressure temperature relationship of the refrigerant entering the evaporator, with the exception of engine coolant flowing through the heater core. Decreasing the air flow through the condenser increases the system pressure. Decreasing the air flow through the evaporator does not allow the operators compartment to get cooled to a comfortable temperature. Always make the Preliminary Checks before any operational checks or testing of the system.

Electrical Operational Checks

An operational check of the electrical system before actual testing assures the following:

1. Compressor clutch is engaging to circulate refrigerant through the system.

2. Blower motor is circulating air across the evaporator for cooling.

Make these operational checks after the Preliminary Checks, but before pressure checks and system checks.

System Pressure Checks

A system operational pressure check of the low and high sides assures that the correct refrigerant pressure is maintained when it enters the condenser and leaves the evaporator for a specific ambient temperature. Make this check after performing the two checks above, and before starting the test sequences which follow.

ADDITIONAL INFORMATION

Moisture In System

During the development of the air conditioning diagnostic procedure, it was determined that moisture does not freeze out at the expansion valve. Depending upon the ambient temperature and flow through the evaporator, moisture freezes near the inlet or outlet of the evaporator. There seems to be no consistent method of indicating moisture in the system. Therefore, if all checks are "NORMAL" and the operator complained of "lack of cooling" below 80°F (27°C), there is moisture in the system. Above 80°F (27°C) moisture will not freeze in the system because the temperature of the refrigerant coming out of the expansion valve will be above 32°F (0°C), the freezing point of water.

Restriction In System

When feeling refrigerant lines or components for restriction, always check for a temperature change in the direction of normal refrigerant flow to correctly sense temperature changes.

HOW TO USE STEP-BY-STEP CHARTS

These charts are usually divided into three sections
STEP ⟶ SEQUENCE ⟶ RESULT

Always start at the first step and go through the complete sequence from left to right. Each sequence ends with a result and tells you the next step. Work through the appropriate steps as directed until the malfunction has been corrected. After repair, repeat the total diagnosing sequence to be sure the problem has been corrected.

Litho in U.S.A.

Throughout the diagnosing sequence, reference is made to the following short procedures which are located after step 48 of the diagnosing sequence. As you become more familiar with these procedures, frequent reviewing will not be necessary.

	Page
Discharging the System	10-30
Flushing the System	10-30
Adding Refrigerant Oil to the System	10-30
Purging the System	10-32
Evacuating the System	10-32
Charging the System	10-33
Leak Testing the System	10-34

ABBREVIATIONS USED IN CHARTS

TEV	—Thermal Expansion Valve
TEMP	—Temperature
°F	—Degrees Fahrenheit
°C	—Degrees Celsius
R-12	—Refrigerant—12
SGB	—Sound-Gard Body
RPM	—Revolutions Per Minute
PSI	—Pounds Per Square Inch
SPEC	—Specification
RH	—Right Hand
LH	—Left Hand
M-BAR	—Milli-bar
MM	—Millimeter
OZ	—Ounce
MIN	—Minimum
MAX	—Maximum

SAFETY PRECAUTIONS

Refrigerant-12 by itself is harmless and nonpoisonous; however, special precautions should be taken when servicing any refrigerant air conditioning system or handling refrigerant containers.

1. Do not expose eyes or skin to liquid refrigerant. Always wear safety goggles when opening refrigerant lines. Liquid Refrigerant-12 has a boiling temperature of approximately −21°F (−29.5°C) at sea level; therefore, serious injury could result if liquid refrigerant contacts the eyes or skin. If Refrigerant-12 strikes the eye, call a doctor IMMEDIATELY and:

Do not rub the eye. Splash cold water on the eye to gradually raise the temperature of the contacted area.

Obtain treatment from a physician as soon as possible.

If the liquid refrigerant comes in contact with the skin, treat the injury as though it were frozen or frostbitten.

2. Do not discharge refrigerant into an area where there is exposed flame. Heavy concentrations of Refrigerant-12 contacting an open flame will produce a poisonous gas.

3. Do not weld or steam clean near or on an air conditioning system. Excessive pressure could be built-up within the system.

4. Do not subject containers of Refrigerant-12 to temperatures above 125°F (51.8°C). Also, during the charging process, water for heating the refrigerant containers should not exceed 125°F (51.8°C). Higher temperatures will cause excessive container pressures.

5. All charging and leak testing should be performed in a well-ventilated area.

6. Before loosening a refrigerant fitting, cover the connection with a cloth.

7. When charging system with engine running, be sure high pressure gauge valve is CLOSED.

8. Observe and stay clear of rotating parts.

Litho in U.S.A.

AIR CONDITIONING DIAGNOSIS

Step	Sequence			
(1) **PRELIMINARY CHECKS** Check the following:	B.	C.	D.	
A. 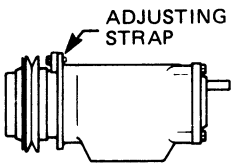 Belt loose?	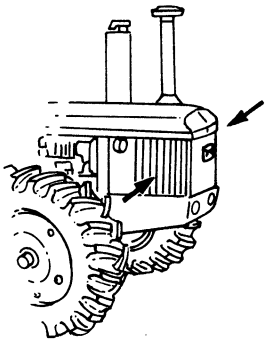 Side screens dirty? (both sides)	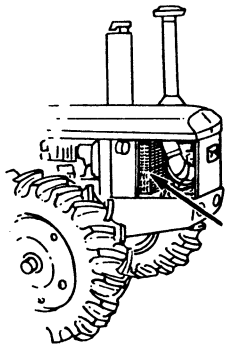 Condensor or radiator dirty?	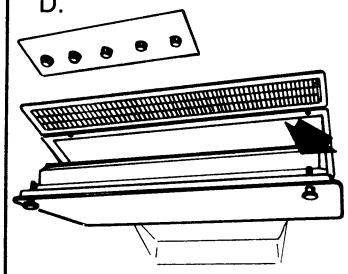 Fresh air filter dirty? NOTE: If filter requires frequent cleaning, clean entire roof area.	
E. 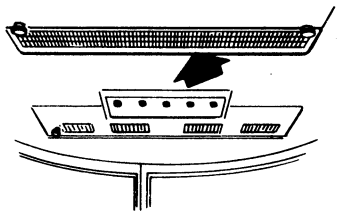 Recirculating filter dirty?	F. 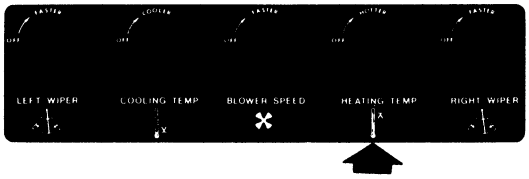 Heater "OFF"?			*Result* Correct any abnormal condition. Then... **GO TO 2**
(2) **ELECTRICAL OPERATIONAL CHECKS:** Key switch "ON". Blower switch at "SLOW SPEED." 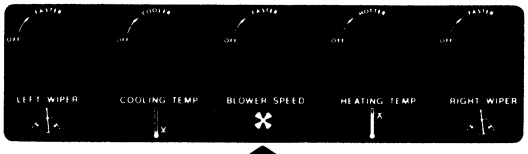 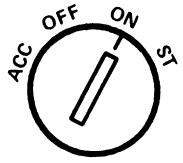 R 31825	Observe motor speed and volume of air from air ducts. Repeat check at "MEDIUM" and "FAST" speeds NOTE: Low air flow indicates * 1. Bad lead connections. 2. Cages installed backwards. 3. Reversed polarity *There will normally be greater velocity from both inner ducts than outer ducts			OK: **GO TO 3** Not OK: **GO TO ELECTRICAL DIAGNOSIS SECTION 240.**

Step	Sequence	Result
(3) Blower Switch at "SLOW". As you turn cooling control knob to "MAXIMUM COOLING" ... 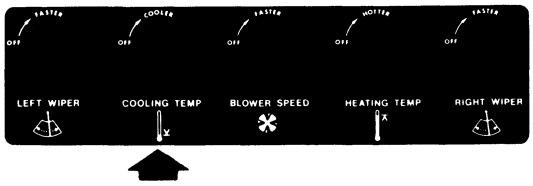	Listen for audible click of compressor clutch. NOTE: Clutch will not engage below 35°F (2°C). 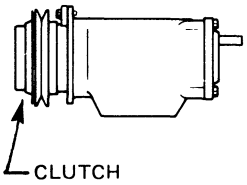	Click: OK. **GO TO 4** No Click: Not OK. **GO TO ELECTRICAL DIAGNOSIS SECTION 240**
(4) Install test equipment as shown: 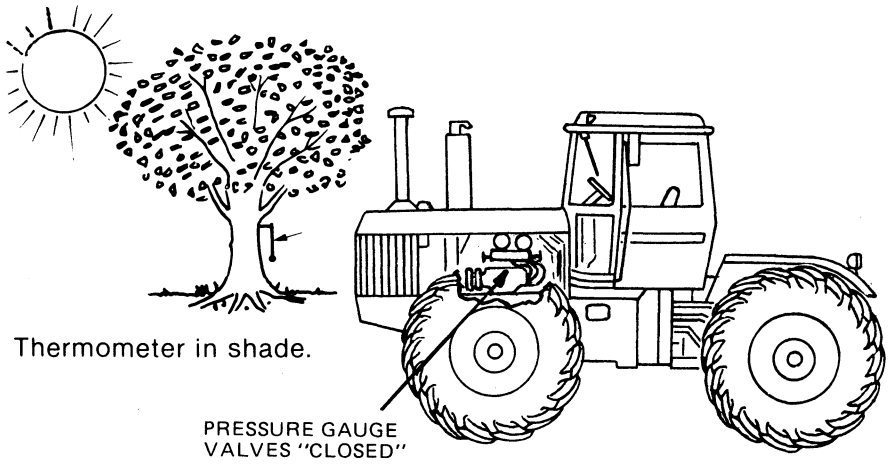	Connect blue or green hose to suction (LH side); connect red hose to discharge (RH side). NOTE: Purge air from hoses.	**GO TO 5**
(5) Compressor "OFF". Connect R-12 can valve to gauge manifold as shown. "OPEN" low and high side valves to stabilize pressures. 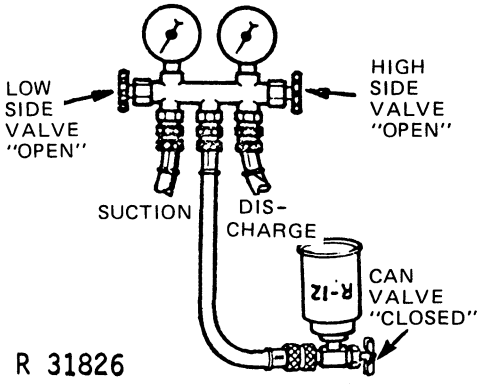	Compare gauge readings to chart.

Temp. °F	Temp. °C	Min. Pressure PSI	Min. Pressure BAR
60	15	45	3.1
65	18	50	3.3
70	21	55	3.7
75	24	60	4.0
80	27	65	4.3
85	29	70	4.7
90	32	75	5.0
95	35	80	5.3
100	38	85	5.7
105	41	90	6.0
110	43	95	6.3
115	46	100	6.7

CAUTION: "CLOSE" low and high side valves after pressures stabilize.

Pressure OK: **GO TO 8**
No Pressure: **GO TO 6**
Low Pressure: **GO TO 7**

Step	Sequence	Result
(6) Check test hoses for missing or damaged Schrader Valve depressor. 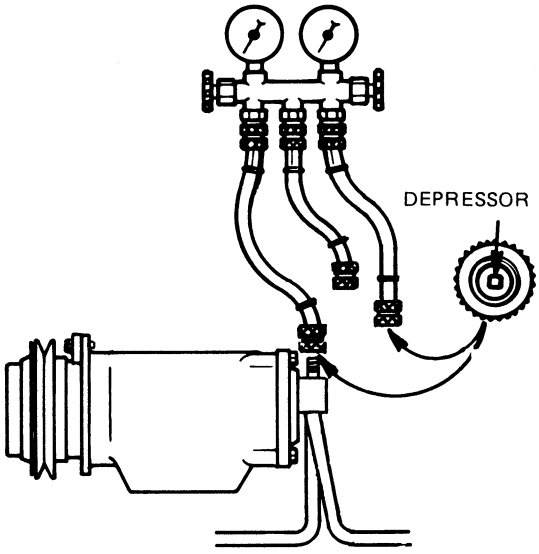 Repair and reconnect hoses.	Check gauges for pressure. Compare reading to chart in step 5. 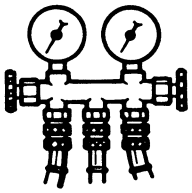	Pressure: **GO TO 5** No Pressure: **GO TO 7**
(7) Compressor "OFF". Purge air from charging hose. "OPEN" low and high side valves. 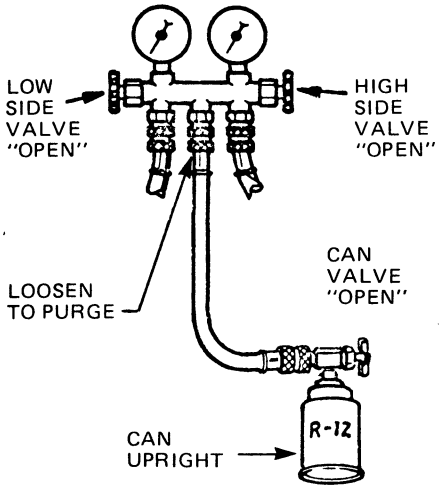	"OPEN" R-12 can valve. Add R-12 until pressure stabilizes. CAUTION: "CLOSE" manifold valves before starting compressor. Check all components, joints and line connections for R-12 leakage with a leakage detector. See page 80-10-34. 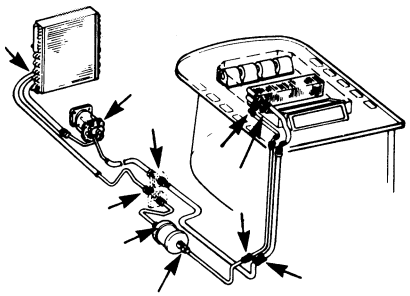	No Leaks: **GO TO 8** Leaks: Repair.* Then... **GO TO 4** *Discharging, Evacuating and Charging may be necessary. See pages 80-10-30, 32 and 33.

Step	Sequence	Result
(8) **TEMPERATURE CONTROL SWITCH CHECK:** SGB door and windows "CLOSED". Key switch "ON". Engine at 2000 rpm. Blower switch at "HIGH". Temp. control switch at "MAXIMUM COOLING". 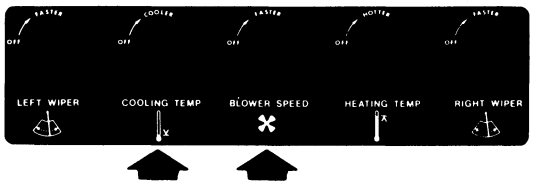	Operate system for 10 minutes. Observe compressor clutch for cycle time. SPEC.: Above 75 °F (24 °C) "Minimum" cycle time 60 seconds. NOTE: The clutch may not cycle when ambient temperature is above 85 °F (29 °C)	Cycle time more than 60 seconds: **GO TO 13** Cycle time less than 60 seconds: **GO TO 9**
(9) Causes of frequent clutch cycling are: A. Blower motor inoperative B. Fresh air and recirculating filters dirty C. Evaporator dirty		Correct condition. Then... **GO TO 8**
D. Temperature control switch capillary tube incorrectly located in evaporator. E. Temperature control switch temperature range set too cold. (NOTE: First attempt D.)		**GO TO 10**
(10) Raise SGB roof. Remove pressurizer cover. 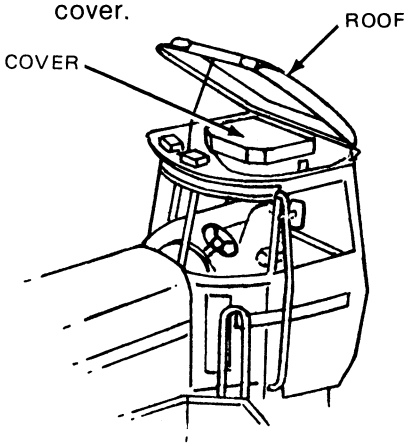 NOTE: Reinstall all roof and cover screws after testing or repair.	Place tube vertical between 1st and 2nd refrigerant tubes 15" from LH side of evaporator. Push tube all the way to bottom. 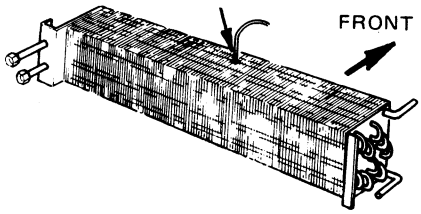 NOTE: If tube is vertical, GO TO 11. IMPORTANT: Pressurizer cover must be secured at each corner for all checks. Engine at 2000 rpm. Compressor "OPERATING". Observe clutch cycle time. 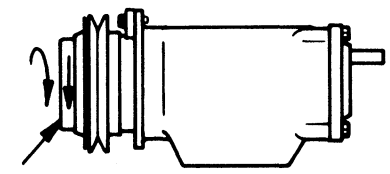	Cycle time more than 60 seconds: **GO TO 13** Cycle time less than 60 seconds: **GO TO 11**

R 31828

Step	Sequence	Result
(11) Move capillary tube at 2" (51mm) intervals (two moves only) from center of evaporator toward RH end of evaporator. 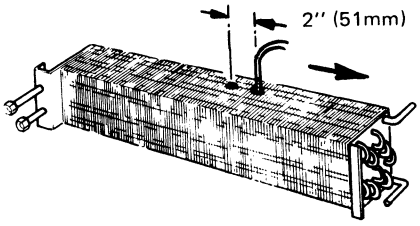	Observe compressor clutch cycle time. 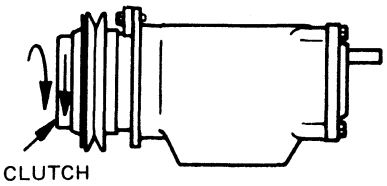 IMPORTANT: Pressurizer cover must be secured at each corner for all checks.	Cycle time more than 60 seconds: **GO TO 13** Cycle time less than 60 seconds: **REPEAT 11** Unable to obtain correct cycle time: **GO TO 12**
(12) Remove inner SGB control panel. Lower temperature switch. 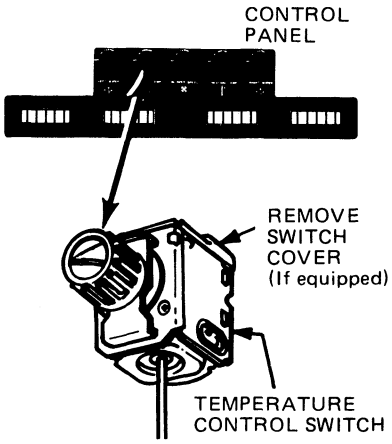	Turn adjusting screw toward colder direction until clutch stays engaged for 60 seconds. 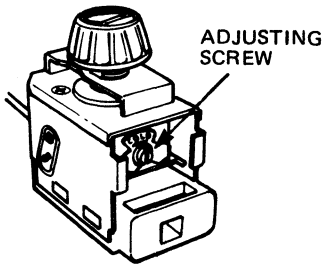	Cycle time more than 60 seconds: **GO TO 13** Unable to obtain correct cycle time: Replace switch. Then... **GO TO 8**
(13) **RECEIVER-DRIER SIGHT GLASS CHECK:** Engine at 2000 rpm. Compressor "OPERATING". Check receiver-drier sight glass for bubbles. NOTE: Word "TOP" must be at 12 o'clock position. 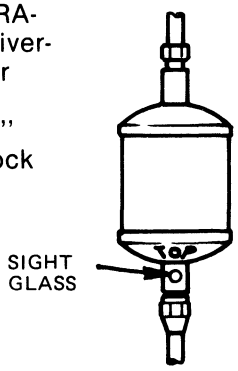	CAUTION: Bubbles with "HIGH" discharge pressure or very slow bubbles and a vacuum, GO TO 16.	No bubbles: O.K. **GO TO 16** Bubbles: Not OK. **GO TO 14**

R 31829

Step	Sequence	Result
(14) Check all components, joints and line connections for R-12 leakage with a leakage detector. NOTE: Check low and high sides with engine "OFF". Repeat check on high side with compressor operating. Any damp, dusty spot indicates an R-12 leak.	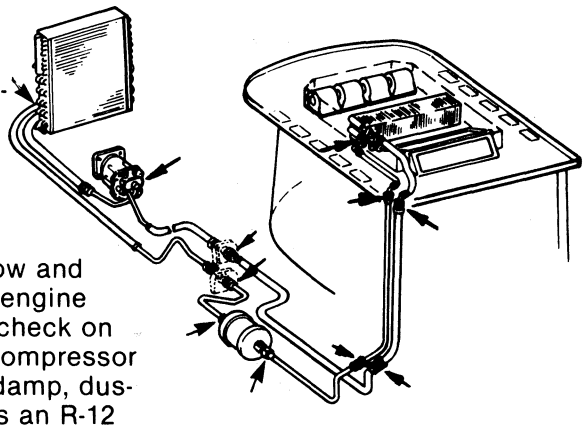	No leaks: **GO TO 15** Leaks: Repair.* Then... **GO TO 4** *Discharging, Evacuating and Charging may be necessary. See pages 80-10-30, 32 and 33.
(15) Connect R-12 container to gauge manifold as shown: Purge air from charging hose. 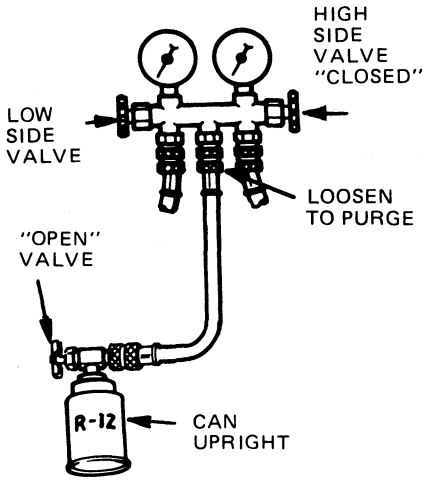 	Compressor "OPERATING". Engine at 2000 rpm. "OPEN" low side valve not to exceed 40 psi (2.6 BAR). Add R-12 until bubbles disappear in receiver-drier sight glass, then add 8 oz. (230 ml) more. 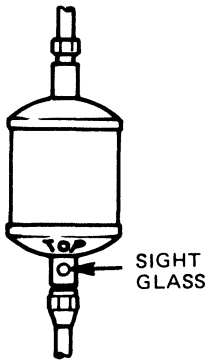 	GO TO STEP 14. Then... **GO TO 13**

Step	Sequence	Result
(16) SYSTEM PRESSURE CHECK Compressor "OPERATING". Engine at 2000 rpm. Blower at "HIGH". SGB door, windows and panels "CLOSED". Check ambient temperature and gauge pressures. 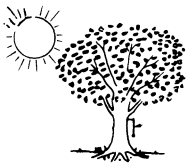 TEMP. SUCTION DISCHARGE 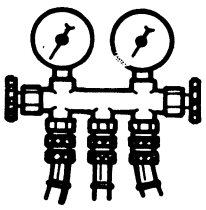 Compare temperature and pressure readings to specification chart. NOTE: The lower figures correspond to humidity near 10%. The higher figures correspond to humidity near 90%.	**Temporary Spec. Chart** **Temp. °F / Suction PSI / Discharge PSI** 66-70 / 1.0-6 / 135-175 71-75 / 1.5-8 / 140-190 76-80 / 2.0-10 / 150-205 81-85 / 3.5-12 / 165-220 86-90 / 5.0-14 / 180-240 91-95 / 7.5-16 / 200-260 96-100 / 10.0-18 / 220-285 101-105 / 13.5-20 / 245-310 106-110 / 17.0-24 / 270-340 111-115 / 21.5-30 / 300-370 **Temp. °C / Suction mBAR / Discharge BAR** 18-21 / 60-400 / 8.8-12.0 21-24 / 100-540 / 9.5-13.0 24-27 / 130-680 / 10.2-14.0 27-30 / 230-810 / 11.2-15.0 30-32 / 340-950 / 12.2-16.3 32-35 / 510-1080 / 13.6-17.7 35-38 / 680-1220 / 15.0-19.4 38-41 / 910-1360 / 16.7-21.0 41-43 / 1170-1630 / 18.4-23.0 43-46 / 1460-2040 / 20.4-25.2	Suction / Discharge Normal / Normal — **GO TO 36** Low, Normal or High / High (Bubbles) — **GO TO 17** High / Low — **GO TO 18** Normal or High / High — **GO TO 19** Low or Vacuum / Normal or Low — **GO TO 27**
(17) There is a **RESTRICTION** at or between the following locations: 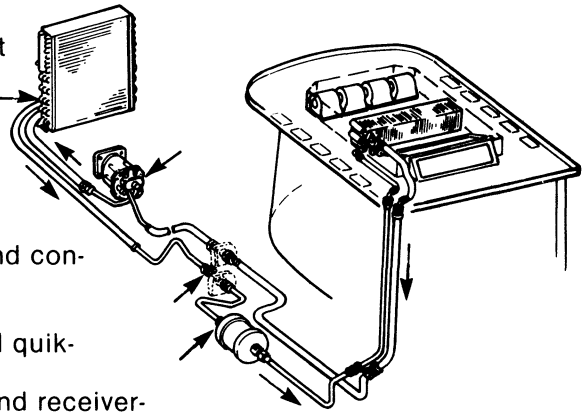 1. Compressor and condenser. 2. Condenser 3. Condenser and quik-coupler 4. Quik-coupler and receiver-drier 5. Receiver-drier NOTE: Feeling lines for a temperature change may or may not locate point of restriction. CAUTION: These lines are normally "HOT".		Inspect and Repair.* Then... — **GO TO 4** *May require Discharging, Flushing, Evacuating and Charging. See pages 80-10-30, 32 and 33.

Step	Sequence	Result
(18) The following are causes of **SUCTION HIGH, DISCHARGE LOW:** 1. Clutch Not Engaged 2. Belt Slipping		Repair. Then... **GO TO 16**
3. Clutch Slipping (Cover condenser to obtain higher pressure to check for slippage) NOTE: Repair requires Discharging, Evacuation and Charging system. See pages 80-10-30, 32 and 33.		Repair. Then... **GO TO 4**
4. Compressor has an internal failure NOTES: Repair requires Discharging, Replacing Receiver-Drier, Flushing, Evacuating and Charging system. See pages 80-10-30, 32 and 33. Perform Compressor Volumetric Efficiency Test after removal and before installaton of compressor on tractor. See page 80-10-36.		
(19) The following are causes of **SUCTION NORMAL OR HIGH, DISCHARGE HIGH:** 1. Restricted Air Flow Through Condensor or Radiator.		Clean. Then... **GO TO 16**
2. TEV Thermal Bulb is Loose or Corroded at Evaporator Tail Pipe. 3. System is Over-Charged with R-12. 4. TEV is Stuck "OPEN". (or) 5. Air in System.		**GO TO 20**
(20) Remove recirculating filter. "OPEN" insulating tape on evaporator outlet pipe. 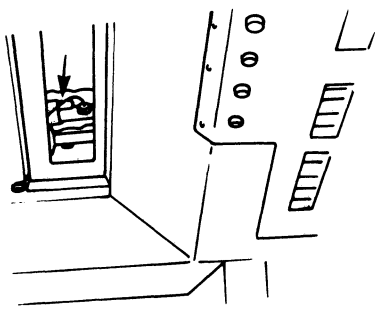	Inspect thermal bulb for corrosion and looseness. 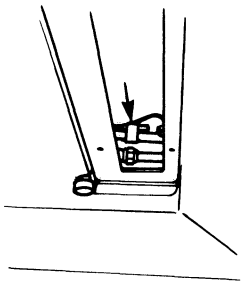	OK: **GO TO 21** Not OK: Repair. Then... **GO TO 16**

Step	Sequence	Result
(21) Compressor "OPERATING". Engine at 2000 RPM. "OPEN" low side (LH) valve to discharge R-12 at a slow rate. 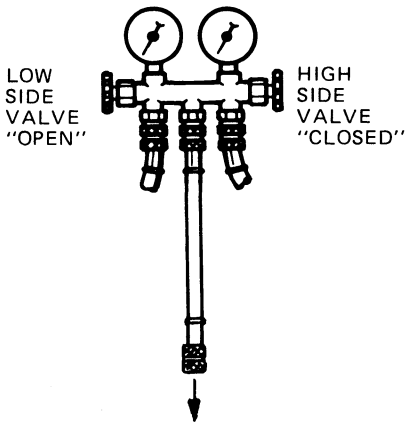	Observe receiver-drier sight glass until bubbles appear, then "CLOSE" low side (LH) valve. 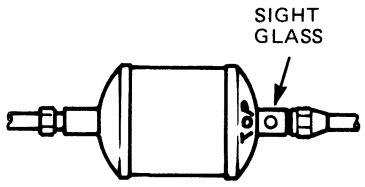 Check gauge pressures and compare to chart at step 16. 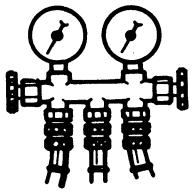	Discharge Pressure High: **GO TO 23** Pressures Normal: **GO TO 22**
(22) Connect R-12 container to gauge manifold as shown: Purge air from charging hose. 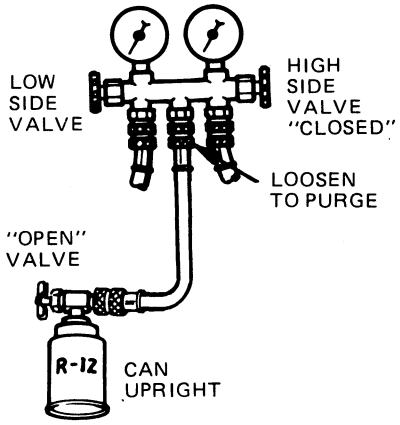	Engine at 2000 RPM. Compressor "OPERATING". "OPEN" low side valve not to exceed 40 psi (2.6 BAR). Add R-12 until bubbles disappear in receiver sight glass. Then add 8 oz. (230 ml) more. 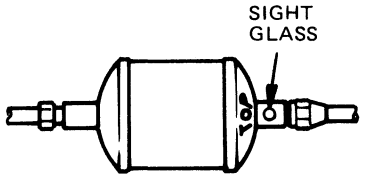 Recheck gauge pressures and compare to chart at step 16. 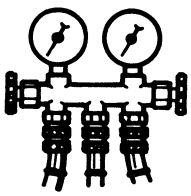	Pressures Normal: **GO TO 36** Pressures High: **GO TO 23**

R 31833

Step	*Sequence*	*Result*
(23) Connect a hose to a can of R-12. Tie open end of hose to thermal bulb of TEV as shown: 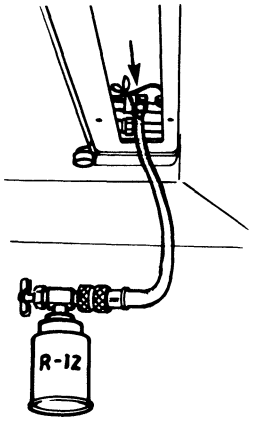	Engine at 2000 RPM. Compressor "OPERATING". "OPEN" valve on R-12 can 1½ turn. Invert can for 10-15 seconds. Then "CLOSE" R-12 can valve. Observe suction pressure gauge for a pressure decrease. 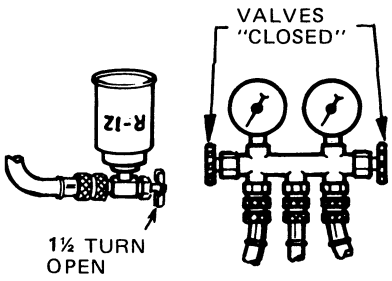 CAUTION: Stand to RH side of SGB to prevent contact with liquid R-12. Wear Your Goggles.	Pressure Did Not Decrease: **GO TO 24** Pressure Decreased: **GO TO 25**
(24) The TEV is sticking. Perform the following: 1. Discharge system. See page 80-10-30, 2. Remove TEV inlet hose and remove screen for inspection: A. Screen is "DIRTY" 1. Flush line between receiver-drier and TEV 2. Replace receiver-drier 3. Add .75 oz. (22 ml) refrigerant oil. See page 80-10-31. B. Screen is "CLEAN". Do not replace receiver-drier unless more than two years old. 3. Install a new TEV and connect all components. 4. Evacuate system. See page 80-10-32. 5. Charge system with R-12. See page 80-10-33.		After Charging: **GO TO 16**

Step	Sequence	Result
(25) The TEV is intermittently sticking open or there is air in the system. Perform the following: 1. TEV check: Compressor "OPERATING". Engine at 2000 RPM.		
A. Remove thermal bulb of TEV from evaporator outlet pipe. 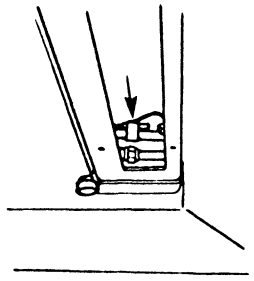	Warm bulb with hand for one minute. Check pressure gauges for increase in pressure. 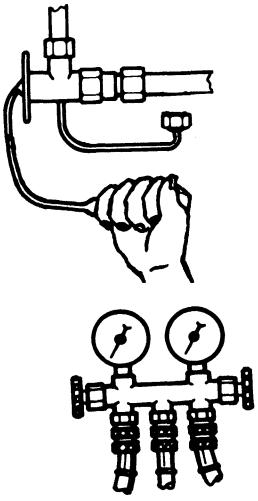 NOTE: Reattach bulb and insulate after testing or repair.	
B. Connect a hose to a can of R-12. Tie open end of hose to thermal bulb of TEV as shown: 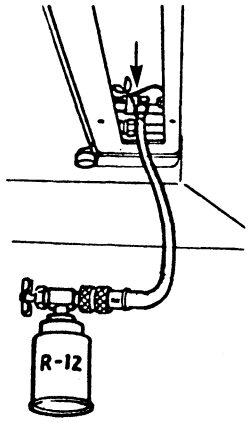 R 31835	"OPEN" valve on R-12 can 1½ turn. Invert can for 10-15 seconds. Then "CLOSE" R-12 can valve. Observe suction pressure gauge for a pressure decrease. 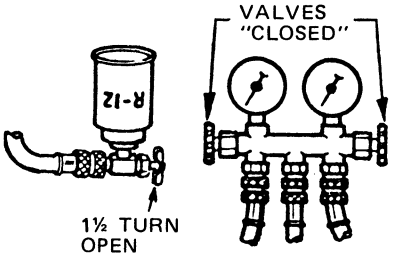 CAUTION: Stand to RH side of SGB to prevent contact with liquid R-12. Wear Your Goggles.	Pressure Increases and Decreases: **GO TO 26** Pressure Does Not Always Change: **GO TO 24**

Step	Sequence	Result
(26) There is air in the system. Perform the following: 1. Discharge system. See page 80-10-30. 2. Evacuate system. See page 80-10-32. 3. Charge system with R-12. See page 80-10-33.		After Charging: GO TO 16
(27) The following are causes of **SUCTION LOW OR VACUUM, DISCHARGE NORMAL OR LOW:** 1. Blower motor inoperative. 2. Dirty recirculating and fresh air filters. (Discharge may be Normal or Low.)		Repair or clean. Then... GO TO 16
3. **RESTRICTION:** (Discharge may be normal or low) a. Between condenser and receiver-drier. b. At receiver-drier c. Between receiver-drier and TEV d. At TEV (inlet screen partially clogged) e. Between evaporator and Quik-coupler (or) f. Between Quik-coupler and compressor suction side. 4. TEV stuck "CLOSED" or no gas charge in thermal bulb. (Discharge will be Low.) 5. Moisture in system. (Discharge may be Normal or Low.)		GO TO 28
(28) Remove thermal fuse from clutch lead. 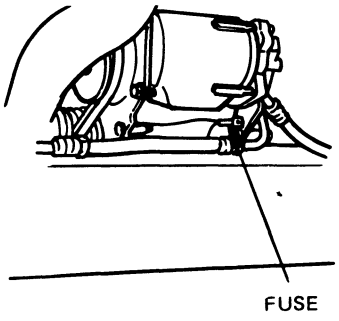 	Connect a jumper wire between power and clutch terminals as shown: 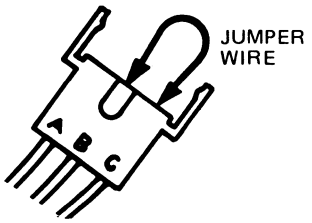 NOTE: Reinstall thermal fuse after testing or repair.	GO TO 29
(29) Compressor "OPERATING". Engine at 2000 RPM. SGB door "CLOSED". Blower at "HIGH". Remove recirculating filter. "OPEN" insulating tape on thermal expansion valve. 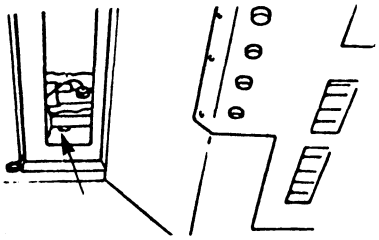	Check TEV for frost before valve outlet connection after three minutes of operation. 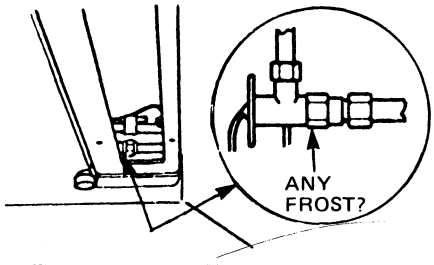 NOTE: Recover TEV and bulb and reinstall recirculating filter after testing or repair.	No Frost: GO TO 32 Frost: GO TO 30

Step	Sequence	Result
(30) Raise SGB roof. 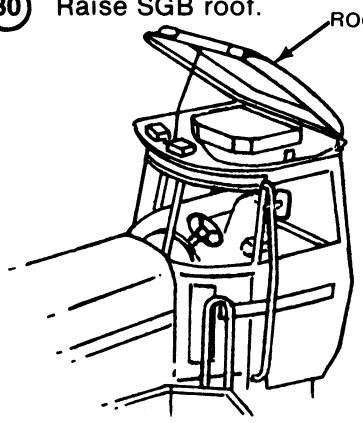 NOTE: Reinstall all roof and cover screws after testing or repair.	Compressor "OPERATING". Engine at 2000 RPM. Inspect line from condenser to TEV inlet for frost or a temperature change. 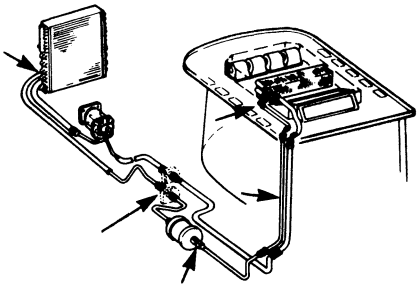 NOTE: A temperature change indicates a restriction.	No Frost or Temp. Change: **GO TO 31** Frost or Temp. Change: Repair* Restriction. After Charging... **GO TO 16** *May require Discharging, Flushing, Evacuating and Charging system. See pages 80-10-30, 32 and 33.
(31) TEV inlet screen is partially clogged or gas charge is low in thermal bulb. Inspect TEV as follows: 1. Discharge system. See page 80-10-30. 2. Remove TEV inlet hose and remove screen for inspection: A. Screen is "DIRTY": (1) Clean screen and reinstall. (2) Flush line between receiver-drier and TEV. (3) Replace receiver-drier. (4) Add .75 oz. (22 ml) of refrigerant oil. See page 10-31. B. Screen is "CLEAN". (1) Replace TEV. (2) DO NOT replace receiver-drier unless more than two years old. 3. Connect all components and purge system. See page 80-10-32. 4. Evacuate system. See page 80-10-32. 5. Charge system with R-12. See page 80-10-33.		After Charging: **GO TO 16**
(32) Compressor "OPERATING". Engine at 2000 RPM. SGB door "CLOSED". Blower at "HIGH". Recirculating filter "REMOVED".	"OPEN" insulating tape on thermal bulb of TEV. Inspect evaporator outlet pipe for frost. 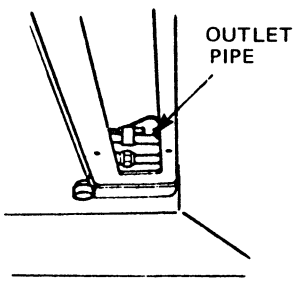	No Frost: **GO TO 33** Frost: **GO TO 34**

Step	Sequence	Result
(33) Raise SGB roof. 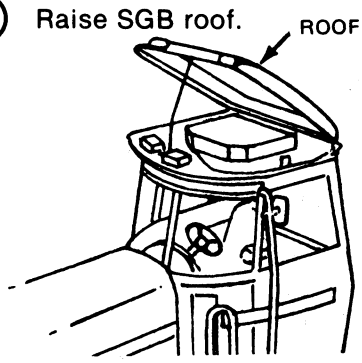 "OPEN" insulating tape on evaporator outlet through recirculating filter opening. 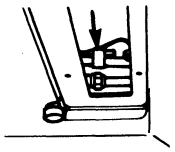	Inspect line for a point where frost starts to accumulate or a temperature change: 1. Between evaporator outlet and Quik-coupler 2. At Quik-coupler (or) 3. Between Quik-coupler and compressor suction side. 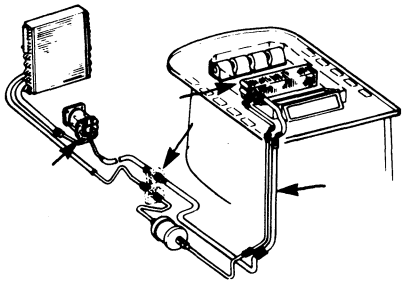 NOTE: A very slight temperature change usually indicates a restriction.	No Frost or Temp. Change: **GO TO 34** Frost or Temp. Change: Repair* Restriction. Then... **GO TO 16** *May require Discharging, Flushing, Evacuating and Charging system. See pages 80-10-30, 32 and 33.
(34) "STOP" compressor for 3 minutes. "OPEN" SGB DOOR. 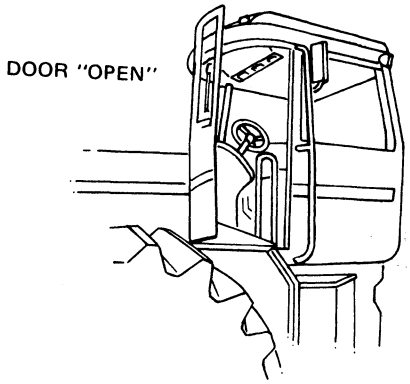	Compressor "OPERATING". Engine at 2000 RPM. SGB DOOR "CLOSED". Compare pressure readings to chart at step 16 after 2 minutes operation. 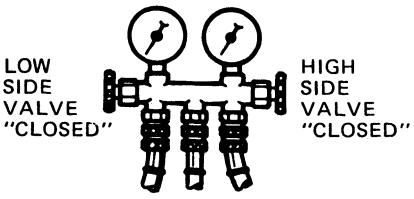	Pressures Normal: Moisture in system. **GO TO 48** Pressures Low: **GO TO 35**
(35) TEV thermal bulb has lost gas charge, TEV is stuck "CLOSED" or screen is clogged. Inspect TEV as follows: 1. Discharge system. See page 80-10-30. 2. Remove TEV inlet hose and remove screen for inspection: A. Screen is "clogged: (1) Clean and Reinstall screen (2) Flush line between receiver-drier and TEV inlet (3) Replace receiver-drier (4) Add .75 oz. (22 ml) refrigerant oil. See page 10-31. B. Screen is "CLEAN": (1) Replace TEV. (2) DO NOT change receiver-drier unless more than two years old. 3. Evacuate system. See page 80-10-32. 4. Charge system with R-12. See page 80-10-33.		After Charging: **GO TO 16**

Step	*Sequence*	*Result*
(36) Compressor "OPERATING". Engine at 2000 RPM for at least 10 minutes. Inspect suction line from quik-coupler to compressor for frost.	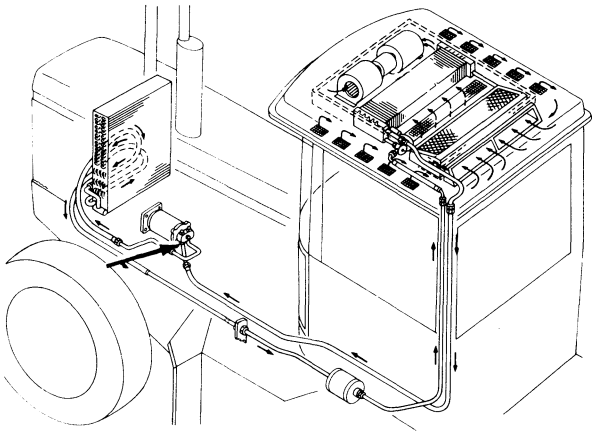	No frost: **GO TO 38** Frost: **GO TO 37**
(37) Remove recirculating filter. 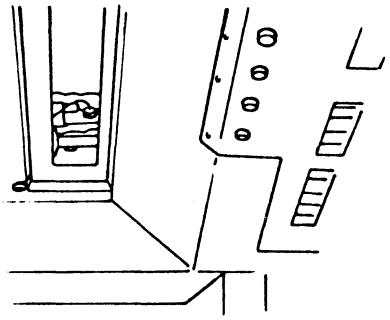	"OPEN" insulating tape on outlet of evaporator. Check TEV thermal bulb for looseness or corrosion. 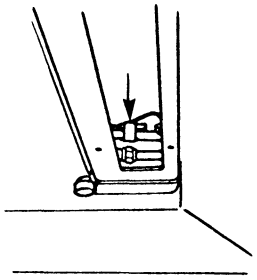	OK: **GO TO 38** Not OK: Repair. Then... **GO TO 38**
(38) **TEMPERATURE DROP CHECK:** Record ambient temperature in shade. 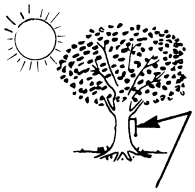 THERMOMETER	Compressor "OPERATING". Engine at 2000 RPM. Place thermometer in LH blower air duct. Blower switch at "HIGH". After 20 minutes "MINIMUM" continuous operating time with SGB door "CLOSED", record air duct temperature. 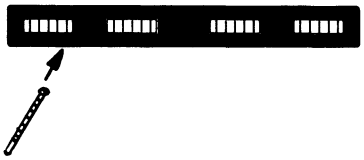	AMB. TEMP. below 90 °F (32 °C) Spec. (Min.) 25 °F (14 °C) AMB. TEMP. 90 °F (32 °C) and above Spec. (Min.) 30 °F (16 °C)	In Spec.: **GO TO 44** Out of Spec.: **GO TO 39**

R 31839

Step	*Result*
(39) Use two flat washers to crimp a heater hose shut with locking pliers as shown: Repeat temperature drop check as in Step 38. 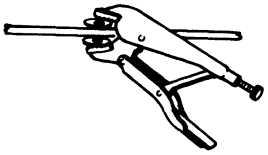 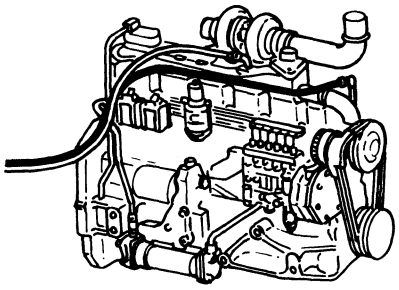	In Spec.: **GO TO 40** Out of Spec.: **GO TO 41**
(40) Heater valve is internally leaking or heater hoses are reversed. 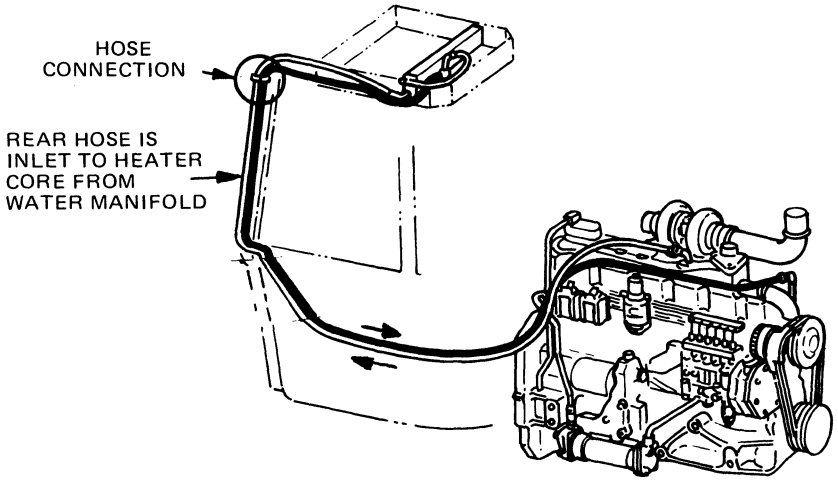	Repair. Then... **GO TO 38**
(41) Check door, windows, panels and seams of SGB for air leakage. 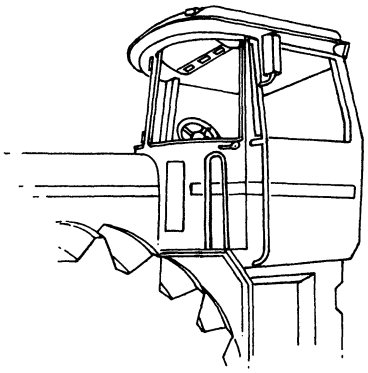	No Leaks: **GO TO 42** Leaks: Repair. Then... **GO TO 38**
(42) Lack of cooling can be caused by dirty components. Check the following: 1. Recirculating filter 2. Blower air duct and fan cage 3. Condenser 4. Radiator (or) 5. Evaporator NOTE: Check for damaged cooling fins of condenser, radiator and evaporator.	Not Dirty: **GO TO 43** Dirty: Clean. Then... **GO TO 38** R 31840

Step	Sequence	Result
(43) Compressor "OPERATING." Engine at 2000 RPM. Feel along entire length of high side from compressor to expansion valve for a temperature change. NOTE: Tubing may be dented, kinked or internally blocked, restricting flow of R-12.	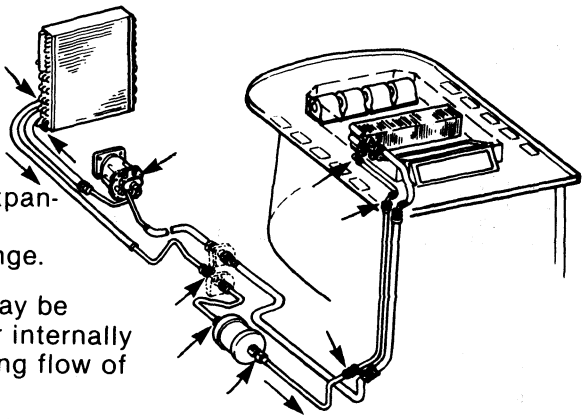 CAUTION: High side line is normally "HOT".	No Temp. Change: No Restriction. **GO TO 44** Temp. Change: Repair* Restriction. Then... **GO TO 16** *Discharging, Evacuating and Charging may be necessary. See pages 80-10-30, 32 and 33.
(44) **CLUTCH CYCLE CHECK:** SGB door and windows "CLOSED". Blower switch at "HIGH". Compressor "OPERATING". Engine at 2000 RPM. Observe compressor clutch for cycling within 10 minutes of operation. 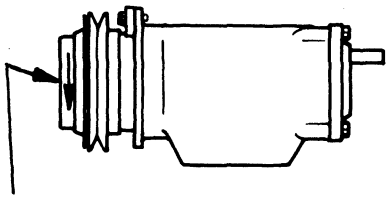 CLUTCH	NOTE: The compressor clutch may not cycle above 75°F (24°C) ambient temperature. Remove recirculating filter. Place a piece of cellophane across rear of evaporator. Clutch should cycle in 45 seconds below 90°F (32°C) or 60 seconds at 90°F (32°C) and above. 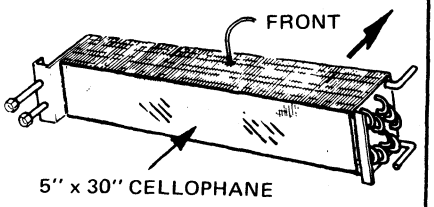 FRONT 5" x 30" CELLOPHANE Remove cellophane after testing.	Clutch Cycles: **GO TO 47** Clutch Cycle Time Out of Spec.: **GO TO 45**
(45) Raise SGB roof. Remove pressurizer cover. 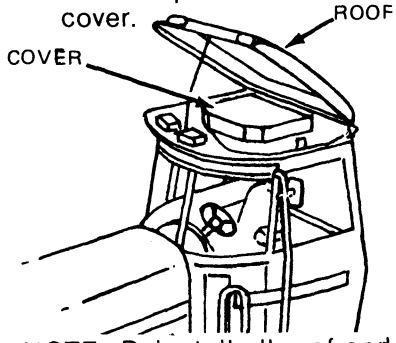 ROOF COVER NOTE: Reinstall all roof and cover screws after testing or repair.	Place capillary tube vertical 15" from LH side between 1st and 2nd refrigerant tubes of evaporator. 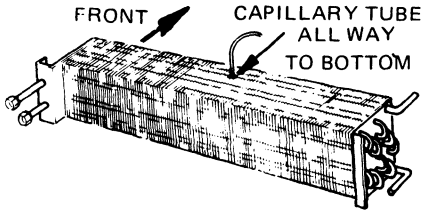 FRONT CAPILLARY TUBE ALL WAY TO BOTTOM NOTE: If tube is vertical, GO TO 46. IMPORTANT: Pressurizer cover must be secured at each corner for all checks.	Clutch Cycles: **GO TO 47** Clutch Does Not Cycle: **GO TO 46**

Step	*Sequence*	*Result*
(46) Move capillary tube at 2" (51mm) intervals (2 moves only) from center of evaporator toward LH end. 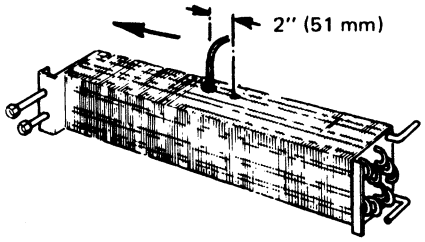	Observe compressor clutch for cycling. 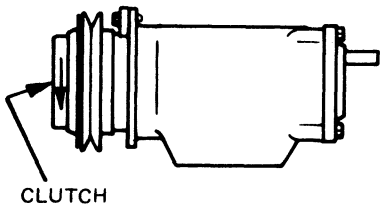 IMPORTANT: Pressurizer cover must be secured at each corner for all checks.	Clutch Cycles: **GO TO 47** Clutch Does Not Cycle: **REPEAT 46** Unable to Cycle Clutch: Replace temp. switch. Then... **GO TO 44**
(47) If the system checks out to be NORMAL at this step and any problem (includes cleaning filters) has been corrected, the system is NORMAL.		RELEASE TRACTOR FOR OPERATION
If the system checks out to be NORMAL at this step without finding a problem, but the operator complains that the Air Conditioning Does Not Cool Properly during operation at or below approximately 80°F (27°C) ambient temperatures, or the thermal fuse fails at temperatures below 80°F (27°C), there is moisture in the system.		**GO TO 48**
(48) Remove moisture from system as follows: 1. Discharge system. See page 80-10-30. 2. Purge system with R-12 or dry nitrogen while changing receiver-drier. See page 80-10-32. 3. Evacuate system. See page 80-10-32. 4. Charge system with R-12. See page 80-10-33. 5. Repeat test sequence.		After Charging: **GO TO 16**

DISCHARGING THE SYSTEM

The following sequence will decrease discharging time and blow less oil out of the compressor or system by discharging from the high side.

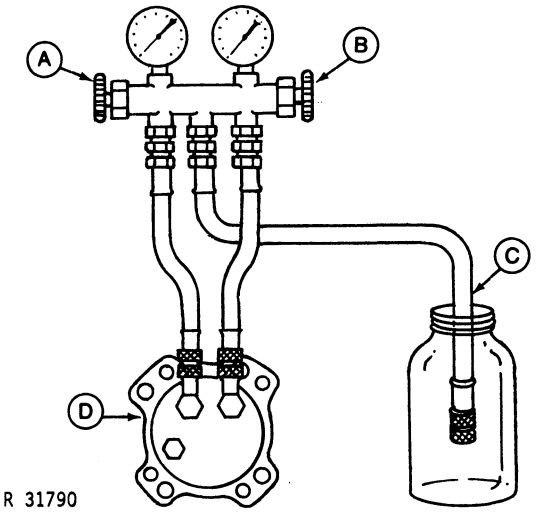

A—Low Side Valve Closed
B—High Side Valve Open
C—Hold Hose In Quart Jar
D—Rear View Of Compressor

Fig. 13-Discharging The System

1. Connect manifold gauge set to compressor test fittings as shown in Fig. 13.

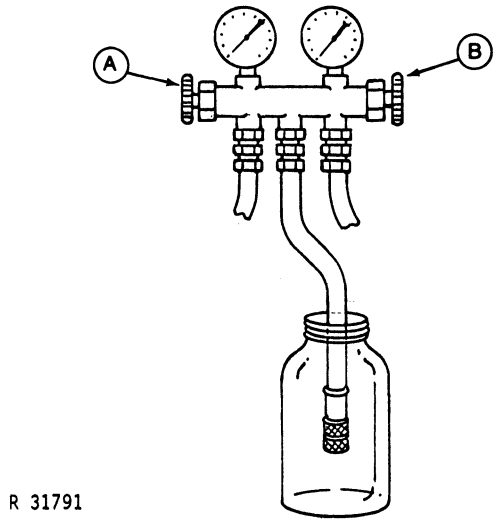

A—Low Side Valve Open
B—High Side Valve Open

Fig. 14-Discharging The System

2. When pressure is below 40 psi (2.76 bar) (2.82 kg/cm²) open low side valve.

3. Measure oil blown out of system after completely discharged.

4. If system is to be flushed, add a new charge of oil. See Adding Refrigerant Oil to the System, Page 80-10-31.

5. If system is not to be flushed, add same amount of new oil blown out of system. See Adding Oil to System page 80-10-31.

6. If R-12 or oil leakage was detected, add new oil. See Adding Refrigerant Oil to the System page 80-10-31.

Flushing The System

Flushing the system with R-11 (Flushing Solvent) is recommended whenever there is an internal failure of the compressor, or a system has been left open and water or dirt could have been blown into the system.

Flushing with R-11 is more effective than flushing with R-12 for the following reasons:

a) R-11 stays in a liquid state up to 76°F (24°C).
b) Will not freeze moisture in system above 32°F (0°C). (R-12 will freeze moisture with zero pressure.)
c) Will move moisture and debris out of system more rapidly above 32°F (0°C).
d) R-11 will not freeze your skin when in direct contact. (R-12 will freeze on contact).

Components can be flushed on tractor (except compressor) with R-11 as follows:

1. Isolate the compressor, receiver-dryer and expansion valve from system.

2. Flush all components individually.

3. Remove compressor, drain oil, add R-11 through drain port, shake compressor and drain.

4. Add oil. See Adding Refrigerant Oil to the System, page 80-10-31.

5. After flushing with R-11 connect all components.

6. Purge complete system with dry nitrogen or R-12. See Purging The System, page 80-10-32.

Litho in U.S.A.

Adding Refrigerant Oil To The System

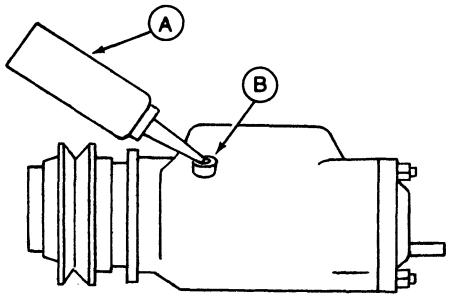

R 31792

A—Squeeze Bottle **B—Drain Port**

Fig. 15-Adding Oil To Compressor

To determine oil charge needed:

1. After flushing the complete system, add 11 oz. (325 mL) of oil through drain port of compressor with a squeeze bottle.

NOTE: Use 525 viscosity oil only.

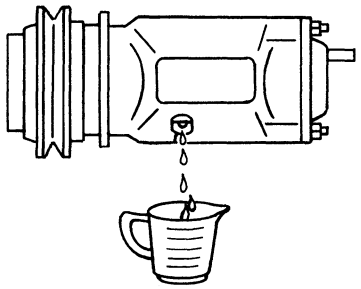

R 31793

Fig. 16-Draining Oil

2. If R-12 or oil leakage was detected and repaired, remove the compressor and measure oil drained (Fig. 16).

a) Less than 3 oz. (89 mL) of oil drained, add 8 oz. (237 mL) of new oil through drain port as in Fig. 15.

b) More than 3 oz. (89 mL) of oil drained, add 6.5 oz. (192 mL) of new oil through drain port as in Fig. 15.

3. When one of the following components is replaced add the corresponding volume of oil:

a) Compressor: Drain oil and add 6.5 oz. (192 mL) (see Fig. 15 and 16).
b) Condenser: 1.0 oz. (30 mL) (see Fig. 15 and 16).
c) Evaporator: 1.5 oz. (44 mL) (see below).
d) Receiver-dryer: 0.75 oz. (23 mL) (see below).
e) Any refrigerant line: 0.25 oz. (7 mL) each (see below).

NOTE: Total oil charge is 11 oz. (325 mL).

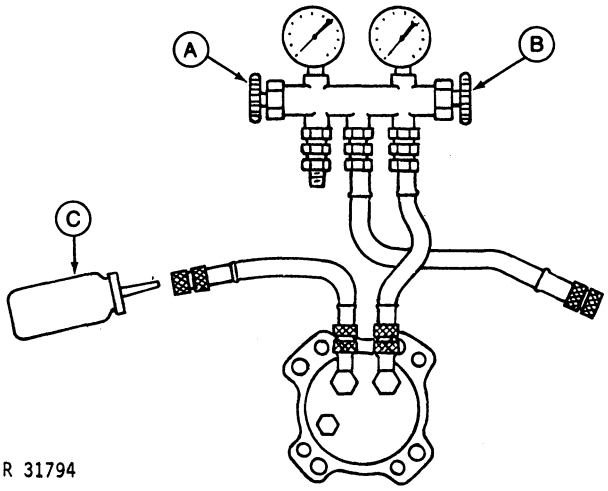

R 31794

A—Low Side Valve **C—Squeeze Bottle**
B—High Side Valve Open

Fig. 17-Adding Oil To System

4. Adding a small amount of oil to the system after a component has been repaired or replaced. (see below)

a) Connect gauge manifold hoses to compressor test fittings as shown in Fig. 17.
b) Add measured amount of oil into suction test hose with a squeeze bottle as shown in Fig. 17.

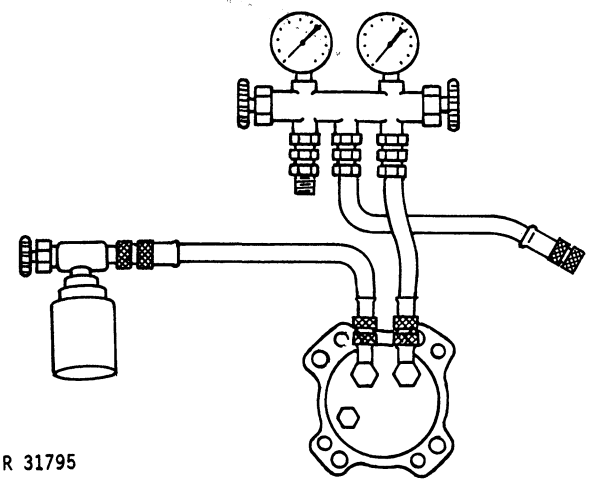

Fig. 18-Blowing Oil Into Compressor

c) Connect a can of R-12 to suction hose as shown in Fig. 18.
d) Open R-12 can valve for 5 seconds to blow oil into compressor.

Purging The System

Purging the system decreases the amount of air and moisture that could migrate into the system.

1. Purge the system with Dry Nitrogen or R-12 after flushing with R-11 or whenever a component is replaced.

2. Purge the system with 5-20 psi (340-1380 mbar) flow at point of gas entry as follows:

a) Purge replacement components individually for 15-30 seconds.
b) Connect each component after purging.
c) Purge the total system through compressor high side fitting toward condenser, receiver-dryer, TEV, evaporator and discharge from compressor low side fitting.

3. Evacuate the system, below.

Evacuating The System

1. Always evacuate the system to remove air and moisture whenever the system has been discharged for the following reasons:

a) When moisture and refrigerant oil combine, sludge is formed. Sludge does not allow moving parts to be properly lubricated.
b) When moisture and refrigerant combine, hydrofluoric and hydrochloric acid is produced. Acids are highly corrosive to metal surfaces and leakage eventually develops.

2. Check all refrigerant line and component fittings for tightness.

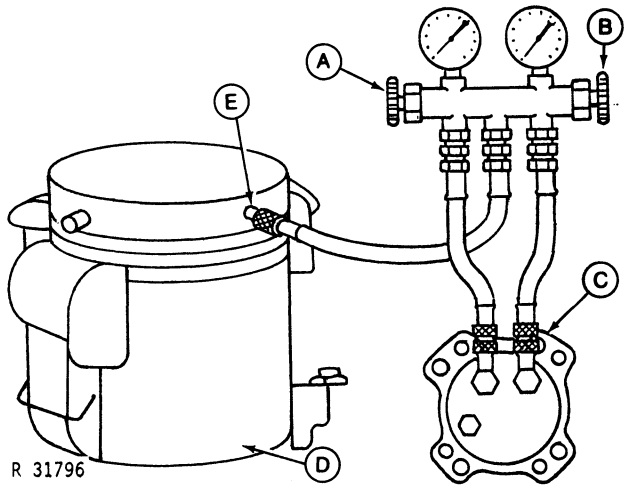

A—Low Side Valve Open
B—High Side Valve Open
C—Compressor
D—Vacuum Pump
E—Vacuum Port
F—Exhaust Port

Fig. 19-Evacuating The System

3. Attach test hoses of gauge manifold to compressor test fittings as shown in Fig. 19.

4. Attach a vacuum pump to center hose of gauge manifold.

NOTE: Pump must be capable of pulling 28.5 in. Hg. vacuum (sea level). Deduct 1 in. Hg. from 28.6 in. for each 1000 feet (300 meters) elevation.

CAUTION: Do not operate compressor during evacuation!

5. Start vacuum pump with both gauge manifold valves and pump exhaust open.

6. If pump does not reach deepest vacuum in 6 minutes, check system for leakage by slightly pressurizing the system with R-12. Then check the system for leakage with a leakage detector.

7. Evacuate the system for at least 30 minutes.

NOTE: Ambient temperature must be above 85°F (29°C) to remove moisture from the system with 28.6 in. Hg. vacuum at sea level.

8. Before stopping vacuum pump, close valves on gauge manifold. There is excessive leakage if the vacuum decreases at a rate of 1 in. Hg. in five minutes. Locate and repair leakage.

9. Charge the system. See below.

Charging The System

Charging the system can be best accomplished (without bypassing the thermal fuse) by adding R-12 into the discharge test fitting as follows:

1. Engine "OFF". System holding a vacuum of at least 28.6 in. Hg. (less 1 in. from 28.6 in. for each 1000 feet (300 meters) of elevation.

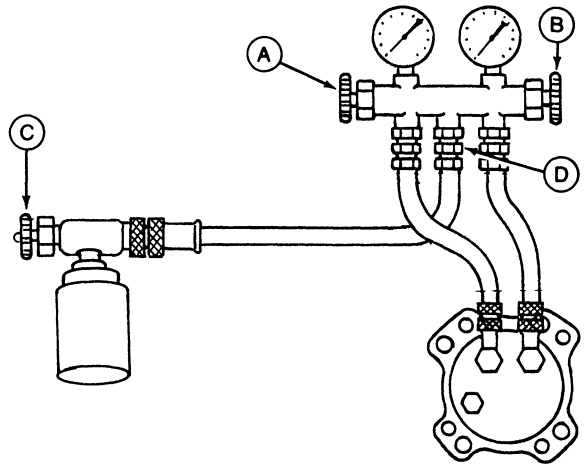

R 31797

A—Low Side Valve Closed **C—R-12 Valve**
B—High Side Valve Closed **D—Center Hose Fitting**

Fig. 20-Charging the System

2. Connect R-12 container or charging station to center hose of gauge manifold (Fig. 20).

3. Open R-12 can valve (C, Fig. 20) slightly with can upright to purge charging hose.

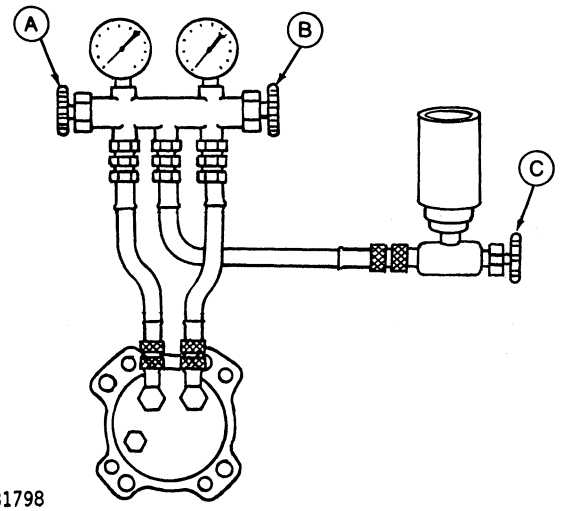

R 31798

A—Low Side Valve **C—R-12 Valve**
B—High Side Valve Open

Fig. 21-Charging The System

4. Fully open R-12 container or charging station valve and invert container (Fig. 21).

5. Open high side valve of gauge manifold to allow R-12 to enter the condenser and receiver-dryer. If charging system with 15 oz. (450 g) cans, close can valve to change cans.

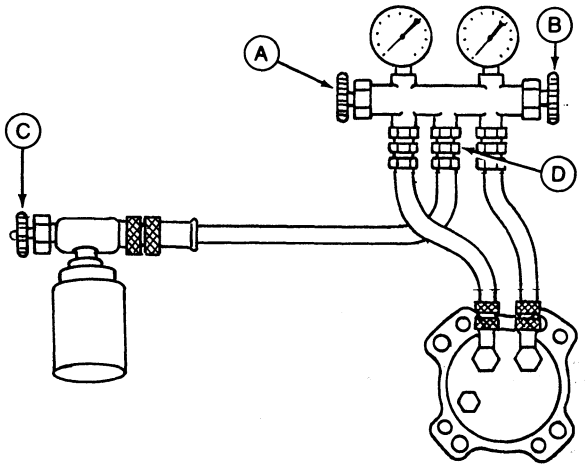

R 31797

A—Low Side Valve Open **C—Close Valve**
B—High Side Valve Closed **D—Center Hose Fitting**

Fig. 22-Charging The System

6. After high side pressure becomes slow to increase, open low side valve (A, Fig. 22).

7. After low side pressure becomes slow to increase, close high side valve (B).

8. Close R-12 can valve and upright can.

9. Engine at 2000 RPM. Compressor "engaged". Add R-12 until system is charged with 3-1/2 lbs (1.68 kg) or bubbles disappear in receiver-drier sight glass. Then add 8 oz. (240 g) to fully charge system.

10. Check ambient temperature, system pressures, and temperature from blower air ducts as instructed in the diagnosing sequence.

LEAK TESTING

Several types of leak detectors are available to the service technician. Carefully follow manufacturers instructions when using any detector.

1. Connect the manifold gauge set.

2. Close high and low side manifold hand valves.

3. Note pressure reading. 50 psi (3.4 bar) (3.46 kg/cm²) is necessary to detect leaks. If pressure is lower than 50 psi (3.4 bar) (3.46 kg/cm²) refrigerant must be added. To do this:

A. Attach center manifold hose to the refrigerant container and purge hoses of air.

B. Open the refrigerant container service valve and the high side manifold valve until 50 psi (3.4 bar) (3.46 kg/cm²) is reached on the low side gauge.

C. Close high side hand valve and the refrigerant service valve. Remove hose.

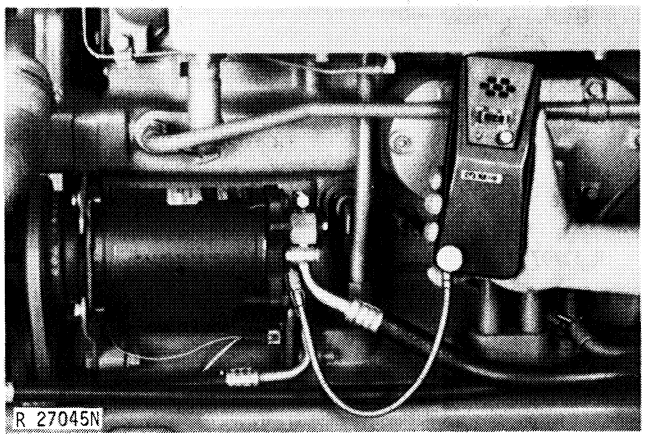

Fig. 23-Using Electronic Leak Detector D-18009KD

4. Move sampling end of detector used from point to point and examine all joints and connections and any other possible leak point. Since Refrigerant-12 is heavier than air, it is best to place the sampling end of the detector beneath the point being tested (see Fig. 23).

5. After locating the leak, purge the system of refrigerant. Repair leak.

6. Check compressor oil and add if necessary (page 80-10-31).

7. Add refrigerant and recheck for leaks. If no leaks are present, evacuate and charge.

AIR CONDITIONING SYSTEM REPAIR

REFRIGERANT COUPLINGS

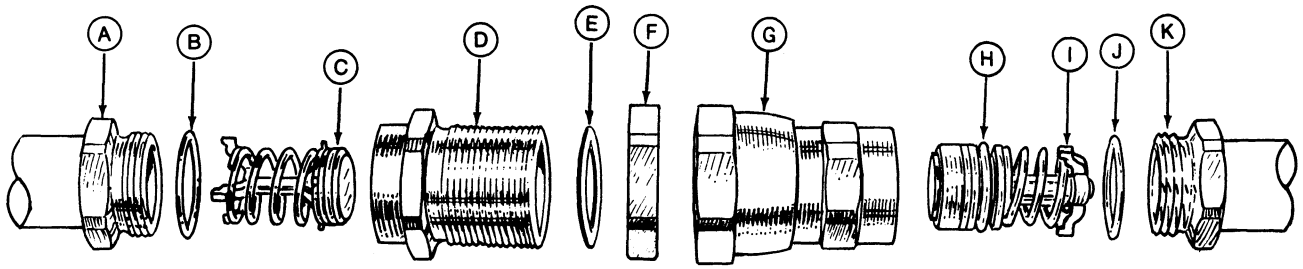

A—Tubing Adapter
B—O-Ring
C—Poppet Valve Assembly
D—Body
E—Gasket Seal
F—Lock Nut
G—Union Nut and Body Assembly
H—O-Ring
I —Valve and Sleeve Assembly
J—O-Ring
K—Tubing Adapter

Fig. 24-Exploded View of Refrigerant Coupling

GENERAL INFORMATION

For information on how the couplings function, refer to page 80-10-6 in this manual.

SERVICE

Disassembly

1. Remove the male coupling half by removing the lock nut (F, Fig. 24) which fastens the coupling to the mounting bracket on Sound-Gard Body.

2. Unscrew the body (D) with poppet valve assembly (C) from the adapter (A).

3. Remove the O-ring (B).

4. Remove the female coupling half by unscrewing the union nut and body assembly (G) from the adapter (K).

5. Remove O-ring (J).

Repair

If coupling leaks, replace the coupling half (male or female, or both) and O-rings (B) and (J). Valve assemblies (C) and (I) are not serviced separately from bodies. However, seal (E) is serviced separately.

Assembly

1. Install O-rings on both adapters.

2. Lubricate O-rings with compressor oil (525 viscosity) to prevent them from scuffing or tearing when coupling body is threaded on adapter.

3. Insert poppet valve assembly (C) into body (D).

4. Tighten body on adapter (A) until there is metal-to-metal contact, and then tighten body an additional 1/8 in. (3 mm).

5. Lubricate O-ring (H) liberally with compressor oil.

6. Insert valve and sleeve assembly (I) into body (G).

7. Tighten body on adapter (K) until there is metal-to-metal contact, and then tighten body an additional 1/8 in. (3 mm).

Litho in U.S.A.

COMPRESSOR REMOVAL

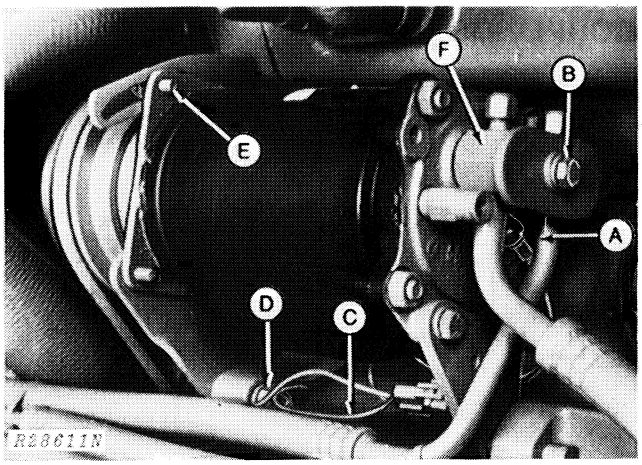

A—Superheat Switch Wiring Lead
B—Cover Plate Screw
C—Compressor Clutch Wire
D—Mounting Screw
E—Adjusting Screw
F—Valve

Fig. 25-Compressor Mounting

If the compressor is operable, operate for 10 minutes by running engine at 1900 rpm with temperature control set for maximum cooling and blower speed on high position, before removing compressor. This allows the refrigerant oil to be circulated in the system and more nearly gives the correct quantity of oil in the compressor.

Shut off engine and discharge refrigerant from system as instructed in DISCHARGING THE SYSTEM.

NOTE: When removing the compressor, it will be necessary to discharge the complete system.

1. Disconnect the wiring lead from the superheat shutoff switch (A, Fig. 25).

CAUTION: High pressure may still exist at the discharge fitting. If this pressure is released too rapidly, there may be a considerable discharge of refrigerant and oil.

2. Slowly loosen the refrigerant valve cover plate retaining cap screw (E).
3. Remove the refrigerant (F) from compressor.
4. Cover compressor openings immediately with cover plate to protect O-rings and prevent entry of moisture and dirt into compressor.
5. Disconnect compressor clutch coil wires (C) and remove the compressor drive belt.
6. Remove the compressor from the mounting bracket.
7. Drain and measure oil from compressor.

The compressor should be tested for leaks before starting disassembly. Refer to LEAK TESTING COMPRESSOR, (below).

A compressor that has an internal leak (discharge to suction side), will require replacement or rebuilding. External leaks can usually be corrected by installing a new shaft seal assembly (page 80-10-38).

Major repairs or testing should be done only by a qualified refrigeration serviceman who has the necessary tools and equipment.

Leak Testing Compressor

After the compressor has been removed from the tractor, perform a volumetric efficiency test. This test will determine the condition of internal components (excluding shaft seal assembly). After completing a volumetric efficiency test, "perform a shaft seal leak test to check for external refrigerant leaks. The shaft seal leak test should again be performed after installation of a new shaft seal assembly, to check for proper installation.

Volumetric Efficiency Test

1. Mount compressor in a vise with oil reservoir up.
2. Inspect outside of compressor for damage.
3. Rotate clutch hub by hand with suction and discharge ports open. If compressor does not rotate satisfactorily, replace compressor.

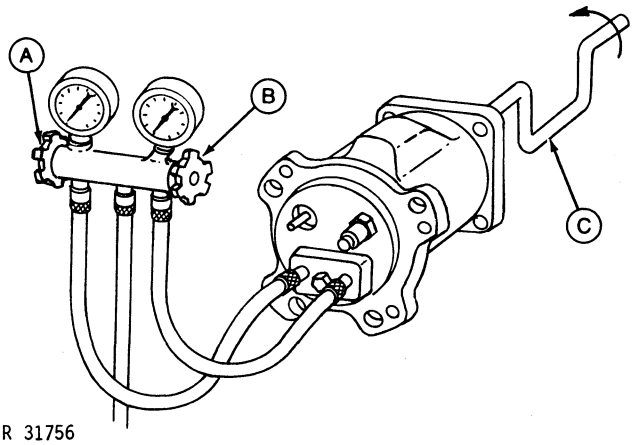

A—Low Pressure Gauge Valve Closed
B—High Pressure Gauge Valve Open
C—Speed Handle

Fig. 26-Testing Compressor For Internal Leaks

4. Install D-18032KD Test Plate over suction and discharge ports (Fig. 26).
5. Connect manifold low pressure gauge hose to discharge adapter fitting (one closest to super heat shutoff switch) and connect high pressure gauge hose to other adapter fitting.

NOTE: Low pressure gauge hose is connected to discharge adapter so that pressure reading taken during test can be more easily read.

6. Close low pressure gauge valve (A) and open high pressure gauge valve (B).

7. With a 9/16 in. socket and a speed handle (C), rotate the compressor clutch hub ten revolutions at a rate of one revolution per second (1 rps).

8. Pressure gauge should read 60 psi or above. A pressure reading of less than 60 psi (4.1 bar) (4.1 kg/cm²) indicates one or more suction and/or discharge valves leaking, an internal leak, or an inoperative valve and the compressor should be replaced.

9. If compressor is serviceable, perform shaft seal leak test.

Shaft Seal Leak Test

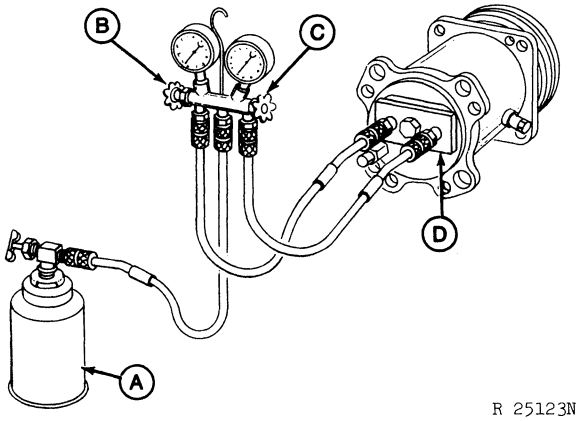

A—Refrigerant Container
B—Low Pressure Gauge Valve Open
C—High Pressure Gauge Valve Open
D—D-18032KD Test Plate

Fig. 27-Testing Compressor For External Leaks

1. With adapter test plate and manifold pressure gauge hoses attached to the compressor connect a 15 oz. (450 g) can of R-12 (A, Fig. 27) to charging hose of manifold.

2. Open both manifold pressure gauge valves (B and C).

3. Open valve on R-12 container and pressurize compressor to 60 psi (4.1 bar) (4.1 kg/cm²).

4. Check for leakage from shaft seal and compressor end plate. If there is end plate leakage, replace compressor. If there is shaft seal leakage, replace shaft seal assembly.

5. Close R-12 valve and bleed pressure from compressor before removing adapter test plate.

Before installing compressor, be sure the compressor contains the correct amount of oil. See the information given in CHECKING AND ADDING COMPRESSOR OIL, page 80-10-31.

IMPORTANT: Compressors kept on hand for stock purposes should be charged with refrigerant, whenever the refrigerant charge is lost. Keep compressor openings capped until installation, to prevent moisture and foreign material from entering compressor.

COMPRESSOR CLUTCH AND SHAFT SEAL ASSEMBLY

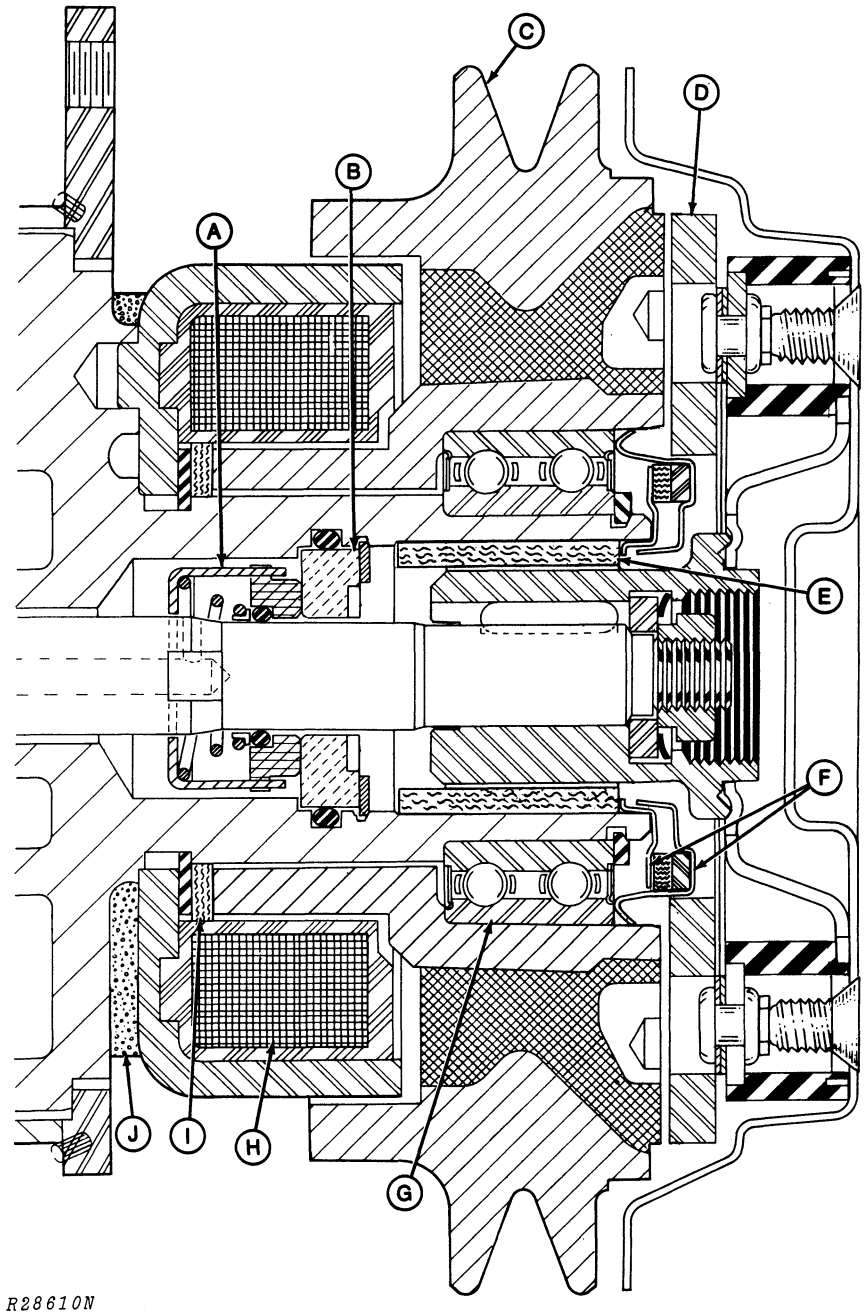

R28610N

A—Shaft Seal
B—Seal Seat
C—Pulley
D—Hub and Driver Plate Assembly
E—Felt Seal
F—Pulley Bearing Front Shield
G—Pulley Bearing
H—Coil and Coil Housing Assembly
I —Felt Seal
J—Rubber Gasket

Fig. 28-Cross-Section of Compressor Clutch Assembly

Disassembly

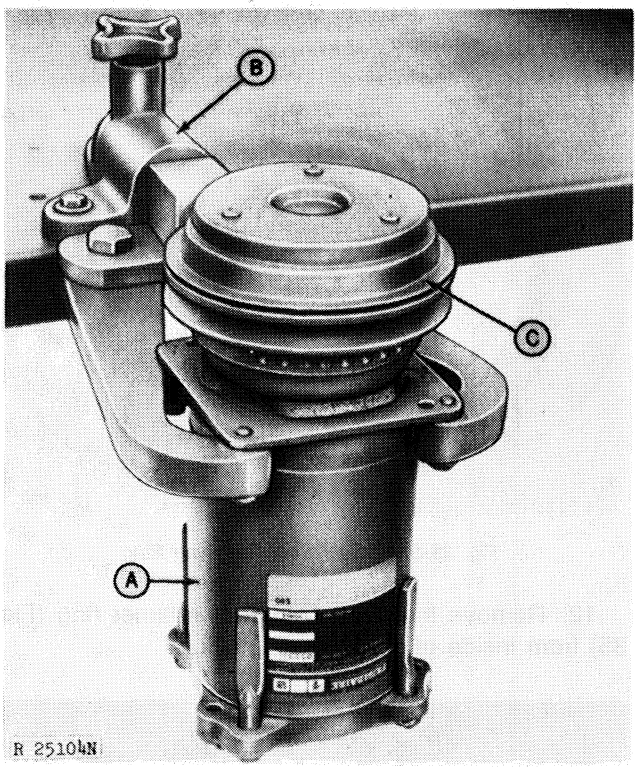

A—Compressor **C—Dust Cover**
B—D-01006AA Bench Holding Fixture

Fig. 29-Compressor Dust Cover

1. Mount the compressor vertically in a D-01006AA (JDM-16) Bench Holding Fixture (Fig. 29).
2. Remove the three dust cover attaching screws.
3. Pull off dust cover (C).

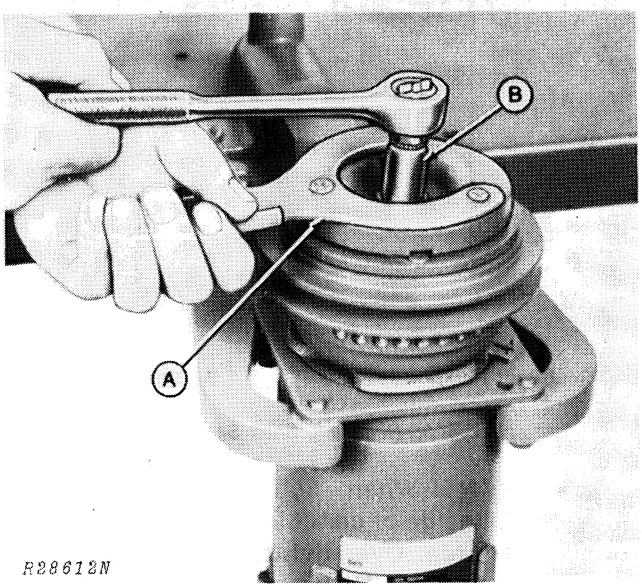

A—Clutch Holding Wrench **B—9/16-Inch Thin Wall Socket**

Fig. 30-Removing Lock Nut

4. Use KD-2018 Clutch Holding Wrench (A, Fig. 30) to hold the clutch hub while removing the hub and drive plate lock nut from the compressor shaft.

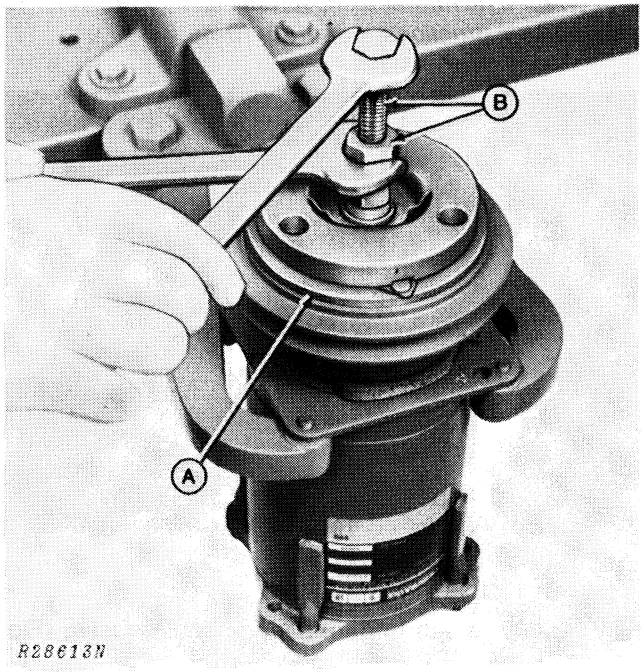

A—Hub and Drive Plate **B—Hub Puller**

Fig. 31-Removing Hub and Drive Plate

5. Use KD-2016B Hub Puller (B, Fig. 31) to remove the hub and drive plate assembly (A).
6. Remove hub pulling tool.

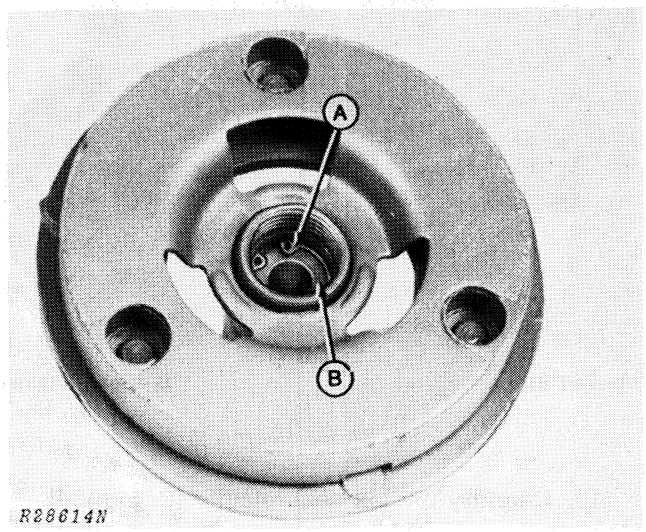

A—Retaining Ring **B—Spacer**

Fig. 32-Retaining Ring and Spacer

7. Remove hub drive plate retainer ring (A, Fig. 32) and spacer (B).

Litho in U.S.A.

Disassembly—Continued

8. Remove hub and key from shaft.

NOTE: If no further disassembly is required, refer to assembly instructions, page 80-10-45.

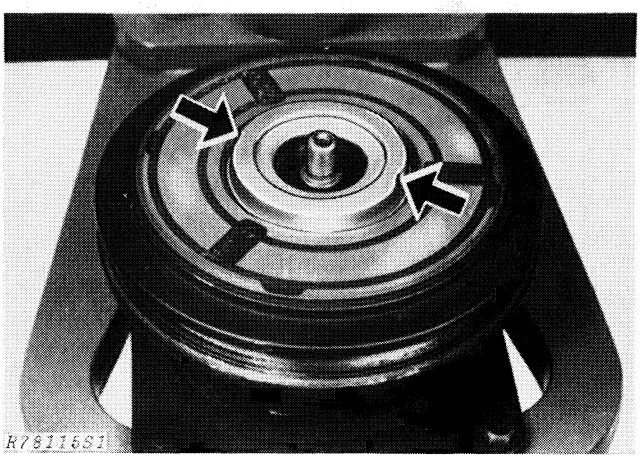

Fig. 33-Bearing Seal Housing

9. Use a punch to dent bearing seal housing (Fig. 33) for removal. Remove housing.

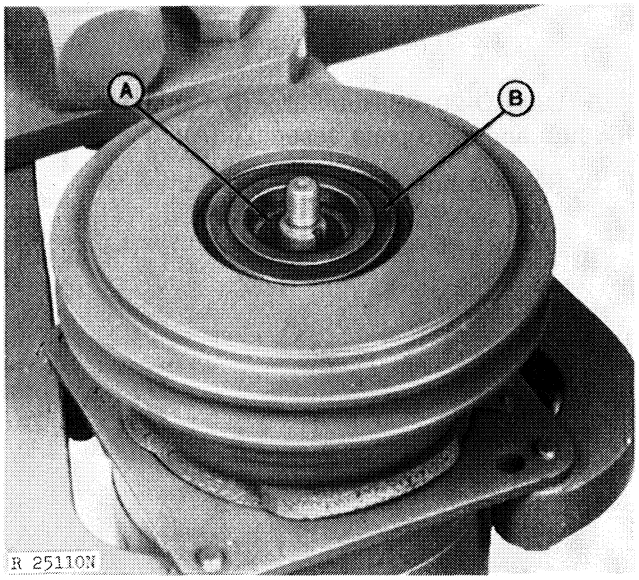

A—Felt Seal **B—Seal Retainer**

Fig. 34-Seal Retainer

10. Carefully pry out seal retainer (B, Fig. 34).

11. Remove felt seal (A).

IMPORTANT: Thoroughly clean inside of compressor neck with compressed air before continuing to disassemble.

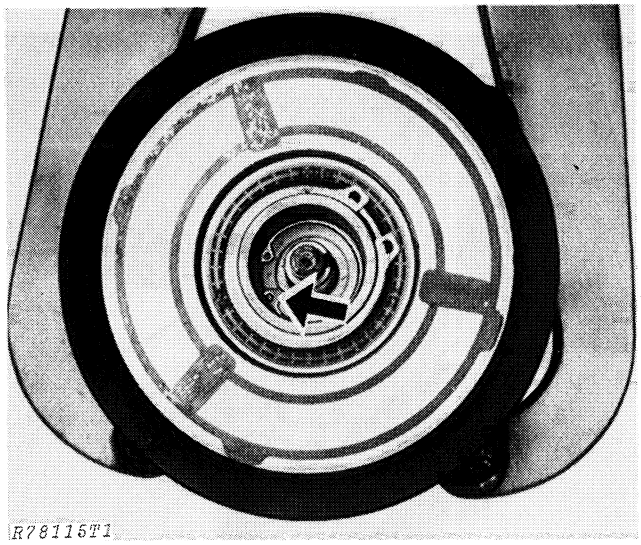

Fig. 35-Shaft Seal Seat Retaining Ring

12. Remove the shaft seal seat retainer ring (Fig. 35) from inside of compressor neck.

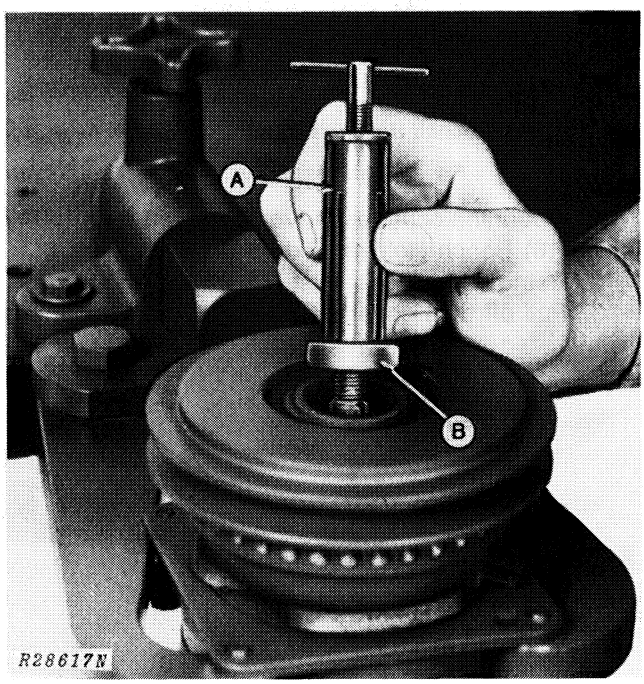

A—Seal Seat Remover **B—Ceramic Seal Seat**

Fig. 36-Removing Shaft Seal Seat

IMPORTANT: When tightening KD-2120 Removal Tool inside of ceramic seal seat, do not use excessive force. Over tightening may cause ceramic seal seat to shatter.

13. Remove the ceramic seal seat (B, Fig. 36) using the KD-2120 Removal Tool (A).

Litho in U.S.A.

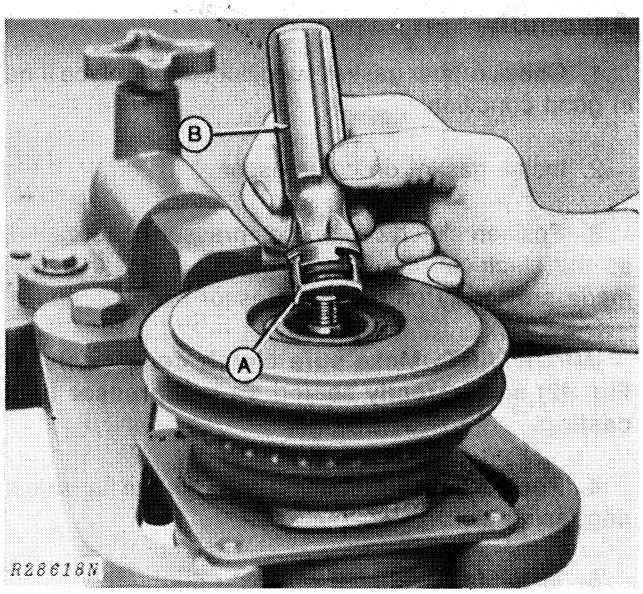

A—Shaft Seal Assembly **B—Seal Removal Tool**

Fig. 37-Removing Shaft Seal Assembly

14. Insert KD-2014B Seal Installation and Removal Tool (B, Fig. 37) into compressor neck. Press down on tool and twist clockwise to engage shaft seal (A).

15. Remove shaft seal assembly by pulling straight out from shaft (Fig. 37).

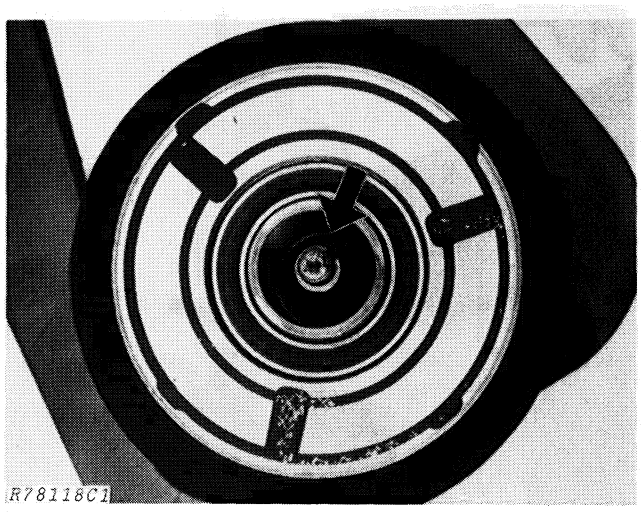

Fig. 38-Ceramic Seal Seat O-Ring

16. Remove the ceramic seal seat O-ring (Fig. 38) from the interior of the compressor by using KD-2014C O-ring removal tool.

NOTE: If no further disassembly is required, refer to assembly instructions p. 80-10-43.

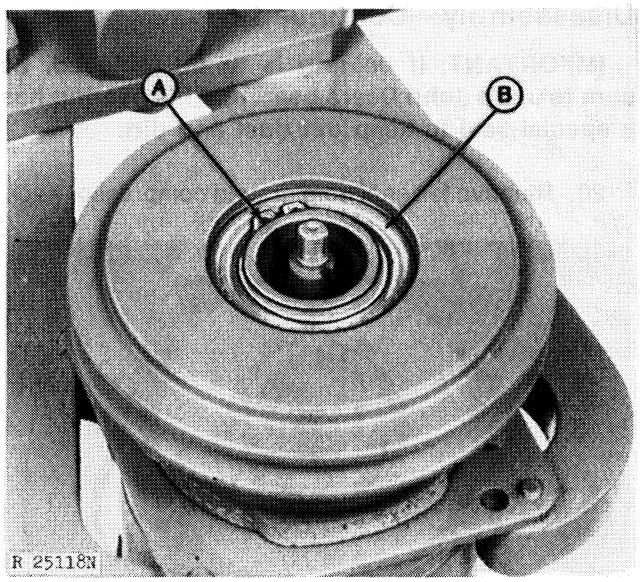

A—Retaining Ring **B—Pulley Bearing**

Fig. 39-Pulley Bearing and Retaining Ring

17. Remove the pulley assembly retainer ring (A, Fig. 39).

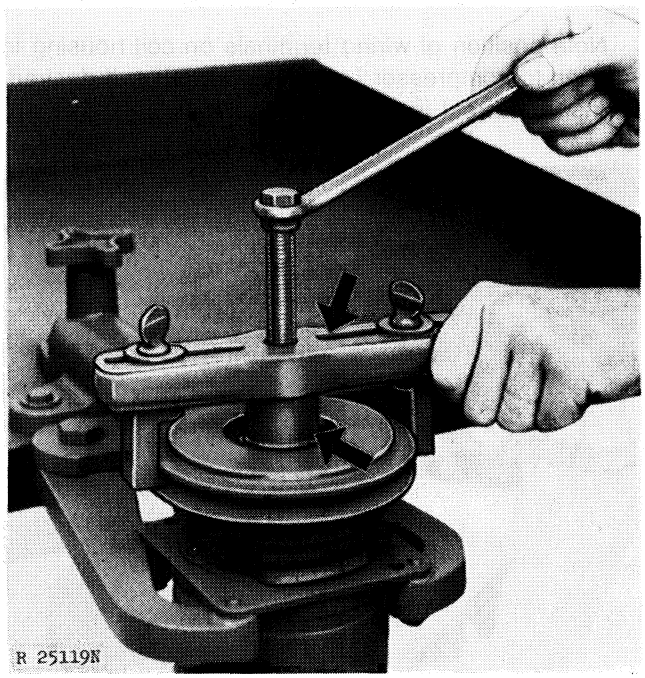

Fig. 40-Removing Pulley and Bearing

18. Use KD-2015 and 2015C Puller Assembly (Fig. 40) to remove the pulley and bearing from the compressor neck.

19. Remove bearing using KD-2017A Driver.

Disassembly—Continued

IMPORTANT: If bearing is to be replaced, be sure to use a John Deere bearing. This bearing has a special seal to keep out dust and dirt.

20. Remove felt seal from around compressor neck.

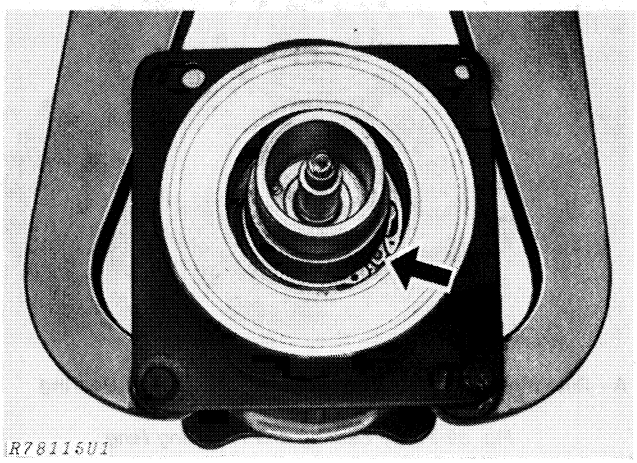

Fig. 41-Coil Retaining Ring

21. Remove coil retaining ring (Fig. 41).

Note position of wiring terminals on coil housing in relation to compressor body. Mark location if desired, to insure correct installation.

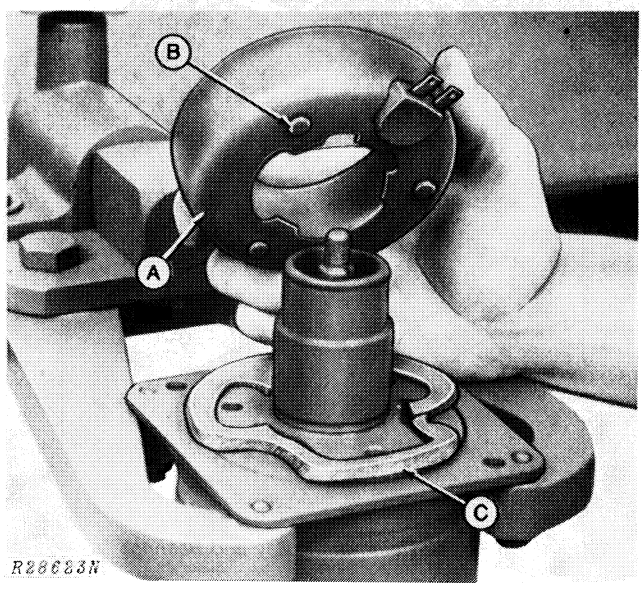

A—Coil Housing
B—Dowel
C—Rubber Gasket

Fig. 42-Removing Coil Housing

22. Remove coil housing assembly (A, Fig. 42) and rubber gasket (C).

Assembly

1. Check rubber gasket condition, and replace if not in good condition.

2. Install gasket on compressor.

3. Position clutch coil on compressor head casting so the electrical terminals correspond with the mark made previously on the compressor body.

IMPORTANT: Make sure clutch coil dowels (B, Fig. 42) are correctly seated on compressor head casting.

4. Replace the coil retaining ring with the flat side of ring facing coil.

5. Install felt seal over retaining ring.

If installing the same pulley and hub drive plate assembly, be sure to clean the contact faces of each unit. Check surfaces for warpage caused by overheating. Replace those parts that show evidence of warpage, or are badly worn.

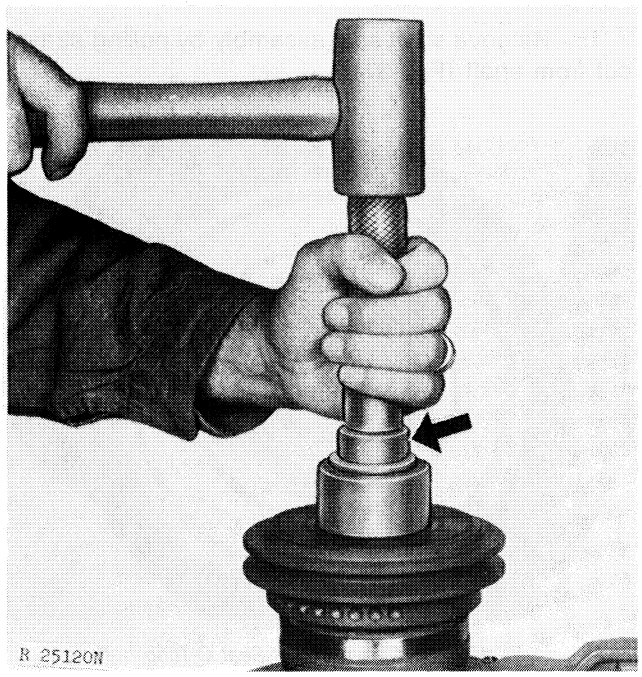

Fig. 43-Installing Pulley and Bearing with KD-2017A and B Tool

6. Use KD-2071A and B Installation Tool to drive pulley and bearing assembly onto compressor neck (Fig. 43).

7. Check pulley for free rotation.

8. Install pulley snap ring retainer.

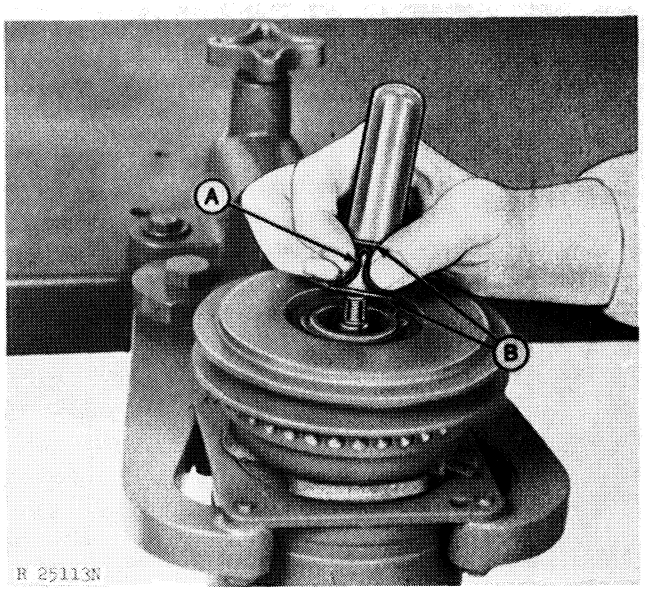

A—O-Ring **B—Washers**

Fig. 44-Installing Seal Seat O-Ring

9. Coat seal seat O-ring (A, Fig. 44) with clean compressor oil, and place over shaft of KD-2014E Tool between the two washers (B).

10. Pull O-ring tight and hold against tool exactly as shown in Fig. 44.

11. Insert tool into compressor neck, and push down firmly with a jiggling motion to allow O-ring to snap into groove.

12. Carefully remove KD-2014E Tool so as not to dislodge O-ring.

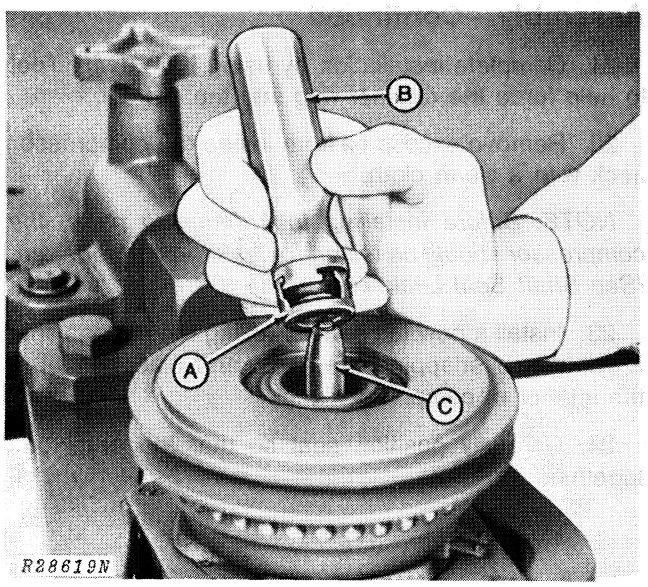

A—Shaft Seal Assembly **B—Seal Installation Tool** **C—Seal Protector**

Fig. 45-Installing Shaft Seal Assembly

13. Place KD-2121 Seal Protector (C, Fig. 45) over end of compressor shaft (with thumb screw removed).

14. Coat new O-ring and face of seal assembly (A) with clean compressor oil.

15. Install seal using KD-2014B Tool (B).

16. Make sure seal is properly positioned by having the flats of the seal assembly aligned with flats on compressor shaft.

17. Release KD-2014B Tool from seal assembly by twisting tool slightly counterclockwise.

18. Coat face and outside edge of new seal seat with clean compressor oil, and install seal seat using KD-2120 Tool.

NOTE: Make sure that seal seat O-ring is not dislodged, and that seal seat is making good contact with the O-ring.

19. Install seal seat retainer ring with flat side against the seal seat.

20. Place retainer ring in bore of compressor neck with snap ring pliers.

Litho in U.S.A.

Assembly—Continued

21. Complete installation by using KD-2014D Tool to help force the retainer ring into the groove.

22. Remove excess oil from inside the compressor neck with a clean cloth.

NOTE: Before installing the remaining parts, the compressor should be tested for leakage of refrigerant. (See Shaft Seal Leak Test p. 80-10-37).

23. Install a new felt seal by rolling the material into a cylinder, overlapping the ends, and placing seal in the interior of compressor neck.

24. Carefully position seal so that the ends butt together.

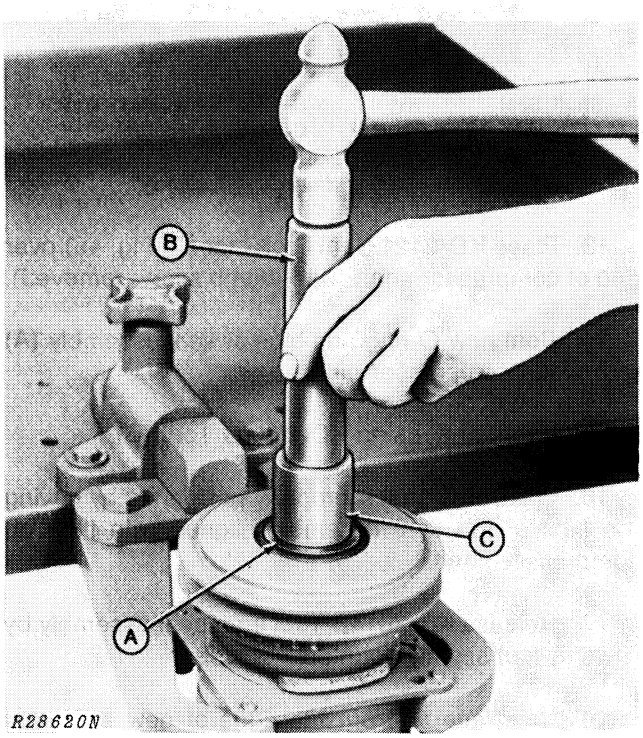

A—Seal Retainer
B—Driver
C—JDST-26-4B Installation Tool

Fig. 46-Installing Bearing Seal Retainer

25. With felt seal properly positioned, insert a new pulley bearing seal retainer (A, Fig. 46) into bore of compressor neck.

26. Using JDST-26-4B Installation Tool (C) and Driver (B) drive shield in until it bottoms on outside end of neck.

NOTE: The outer face of the seal retainer which contacts the bearing seal housing has a Teflon coating. Therefore, no lubricant of any kind should be used on this surface.

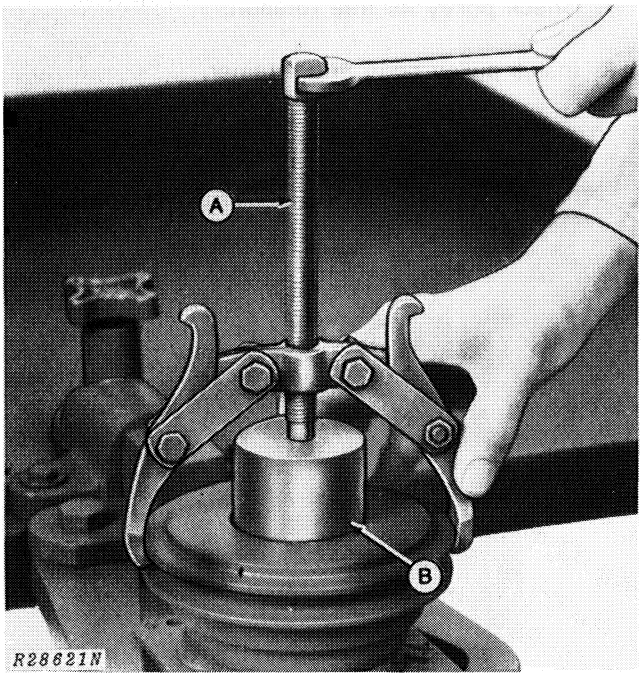

A—Puller
B—Installation Tool

Fig. 47-Installing Bearing Seal Housing

27. Place a new bearing seal housing over the pulley bearing bore.

28. Press in bearing seal housing until it bottoms against the bearing using the JDST-26-4A Installation Tool (B, Fig. 47) and a conventional jaw-type puller similar to D-01205AA puller (A).

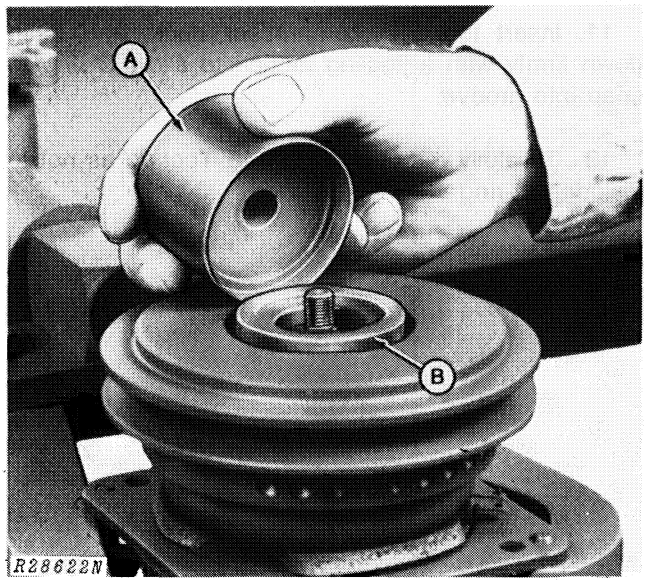

A—Bearing Seal Housing Installation Tool
B—Bearing Seal Housing

Fig. 48-Bearing Seal Housing Installed

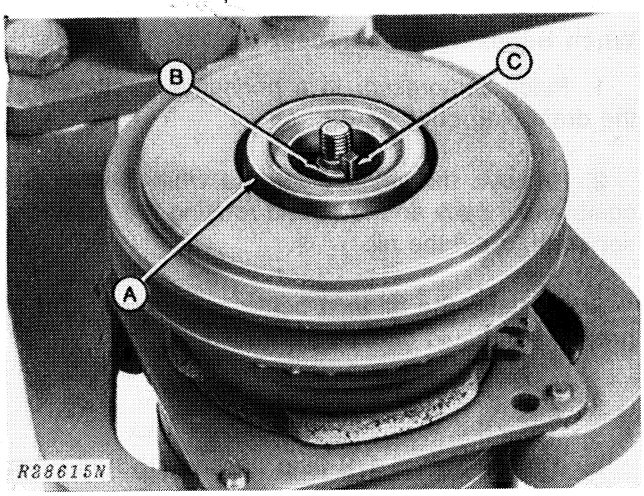

A—Bearing Front Shield **B—Shaft Shoulder** **C—Key**

Fig. 49-Drive Key Position

29. Position key (C, Fig. 49) so that it will protrude about 3/16 in. (5 mm) from shoulder of compressor shaft (B).

30. Align hub and drive plate assembly (with key) in shaft.

31. Position assembly in compressor front end casting.

IMPORTANT: Do not drive or pound on hub of drive plate assembly or on end of compressor shaft. Use the proper tools to prevent possible shifting of swash plate position (keyed to main shaft), which might cause compressor damage.

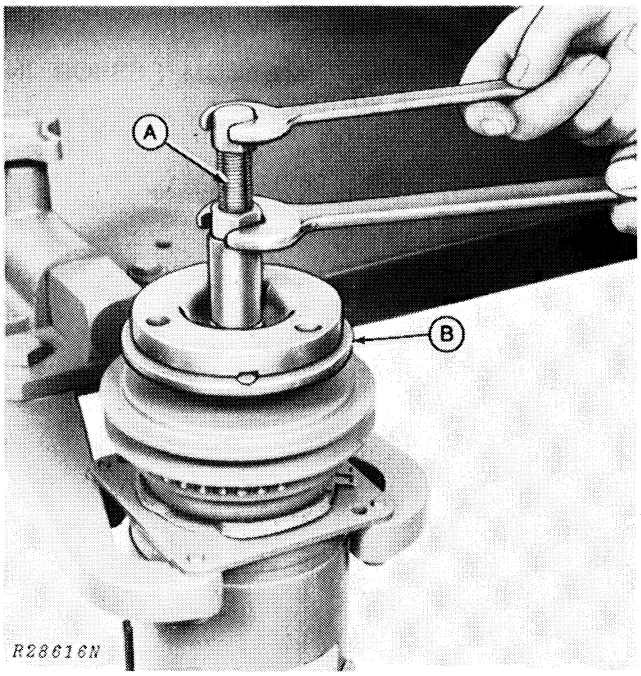

A—Hub Installing Tool **B—Hub and Drive Plate**

Fig. 50-Installing Hub and Drive Plate

32. Screw KD-2016B Installing Tool (A, Fig. 50) onto threaded end of compressor shaft approximately three full turns.

33. Press hub and drive plate (B) on compressor shaft by holding hex. end of tool with a wrench in one hand and using a wrench in the other hand to turn the hex. nut.

34. Continue to press hub and drive plate until there is 0.032 in. (0.81 mm) clearance between the drive plate and pulley. (Use the 0.032 in. (0.81 mm) feeler gauge provided as part of tool 2016F.)

35. Remove KD-2016B Installation Tool.

36. Make certain the key has remained in place by locking into drive plate hub.

37. Install hub spacer washer.

38. Secure spacer with retainer ring (flat side of ring facing spacer).

39. Install a new retaining nut on compressor shaft with the thin side of nut next to the spacer.

40. Tighten nut to 15 ft-lbs (20 Nm) (2 kgm). (Use KD-2018 Clutch Holding Wrench to hold clutch from turning while tightening nut.)

41. Check the gap between the drive plate and pulley for specified clearance of 0.022-0.057 in. (0.56-1.45 mm).

Checking And Adding Compressor Oil

General Information

The compressor oil flows throughout the system with the refrigerent when the system is operating, lubricating the compressor parts. In general, it is not necessary to question the oil level in the system unless there is evidence of a significant loss of refrigerant (hence, a significant loss of oil) from:

1. Broken hose.

2. Severe leak at hose fitting.

3. Leaking compressor seals.

4. Collision or upset damage to system components.

If the compressor or one of the other major system components (condenser or evaporator) has been removed for servicing, the oil level should be checked. To check the oil level in the system, the compressor has to be removed from the engine. When oil is required, pour 525 viscosity oil into the oil drain tube of compressor.

IMPORTANT: Use care when checking and adding oil. Too much oil in the system will reduce maximum cooling capacity. Too little oil will result in poor lubrication of the compressor leading to early compressor failure.

When Servicing Compressor

1. Place compressor in a horizontal position with the drain plug downward.

2. Remove the drain plug and while tipping the compressor back and forth and rotating the compressor shaft, drain the oil.

3. Measure the oil in a bottle or container that is graduated in fluid ounces (or milliliters).

4. Discard the oil.

5. If more than 5-1/2 fluid ounces (155 mL) was drained from the compressor, place that same amount of new oil back into the compressor.

6. If 5-1/2 fluid ounces (155 mL) or less was drained, add 6 fluid ounces (196 mL) of new oil to the compressor.

When installing a new or rebuilt compressor that has a full charge of oil (11 fluid ounces [312 mL]), drain the oil and save it. Place the required amount of oil that was saved back into the compressor in the amount instructed in Steps 5 and 6.

When installing a compressor that has been overhauled (and has not been filled with a full charge of oil), add 1 extra ounce (28 mL) to the amount given in steps 5 and 6.

7. Install compressor (see COMPRESSOR INSTALLATION, page 80-10-47).

When Servicing System Components Other Than Compressor

When replacing other system components, the compressor will also have to be removed. Follow instructions given above for checking compressor oil and add the following amounts of oil for each listed component being replaced:

Evaporator—4 fluid oz. (114 mL)
Condenser—2 fluid oz. (57 mL)

NOTE: If the complete system was flushed with components in place the amount of oil lost is considered to be negligible.

If any component has been removed, the oil drained and the component individually flushed the amount of oil listed above for that component should be added to the compressor.

If the complete system was disassembled and all lines and components (including the compressor) were individually drained of oil and flushed, the full charge of oil (11 fluid oz. [312 mL]) should be added to the compressor when system is reassembled.

COMPRESSOR INSTALLATION

Before installing compressor, be sure the compressor contains the correct amount of oil. See the information given in CHECKING AND ADDING COMPRESSOR OIL, page 80-10-31.

IMPORTANT: Compressors kept on hand for stock purposes should be charged with refrigerant, whenever the refrigerant charge is lost. Keep compressor openings capped until installation, to prevent moisture and foreign material from entering compressor.

NOTE: Before installing compressor, rotate the compressor shaft 4 or 5 times. This permits proper lubrication of compressor seal over all its surface. Be sure to remove all excess oil from the outside surface of the compressor to prevent oil being thrown onto the magnetic clutch.

1. Install compressor on tractor.

2. Connect the magnetic clutch control wiring.

3. Install compressor drive belt and tighten, using a belt tension gauge, to 130-140 lbs. (578-622 N) on a new belt, or 85-94 lbs. (378-423 N) after run in.

Immediately after run in (approx. 10 minutes) check tension. If tension is within specification, no adjustment is necessary. If tension is not within specification, wait 10 minutes; loosen belts and tension to specifications.

CAUTION: New compressors are charged with a mixture of nitrogen, Refrigerant-12, and 11 fluid oz. (312 mL) of Frigidaire 525 viscosity oil. If the cover plate is removed too rapidly, oil will be blown out with the sudden release of pressure.

When installing an exchanged or rebuilt compressor, SLOWLY remove the cover plate from the compressor valve fittings to bleed off any pressure that may exist in the compressor.

Coat the compressor manifold O-ring packings with compressor oil and install refrigerant valves on compressor. Tighten cover plate screw to 25 ft-lbs (34 Nm) torque.

IMPORTANT: Prevent dirt or misture from entering the compressor manifold assembly. Gauge port caps should be in place.

Be sure to flush the complete system if compressor failed internally due to broken parts or seizure. Refer to FLUSHING THE SYSTEM, page 80-10-30.

If the compressor was discharged and opened up for service, the system must be evacuated and recharged. Refer to CHARGING THE SYSTEM, page 80-10-33.

CONDENSER, RECEIVER-DRYER, AND EVAPORATOR

CONDENSER

General Information

The condenser is mounted directly in front of the radiator. Air is drawn through the condenser by the engine fan, permitting heat exchange to take place.

Be sure that the condenser core is not plugged with dirt or trash, or excessive heat and pressure may build up, causing system to not function properly.

Removal

Depressurize the air conditioning system as instructed in DISCHARGING THE SYSTEM, page 80-10-30.

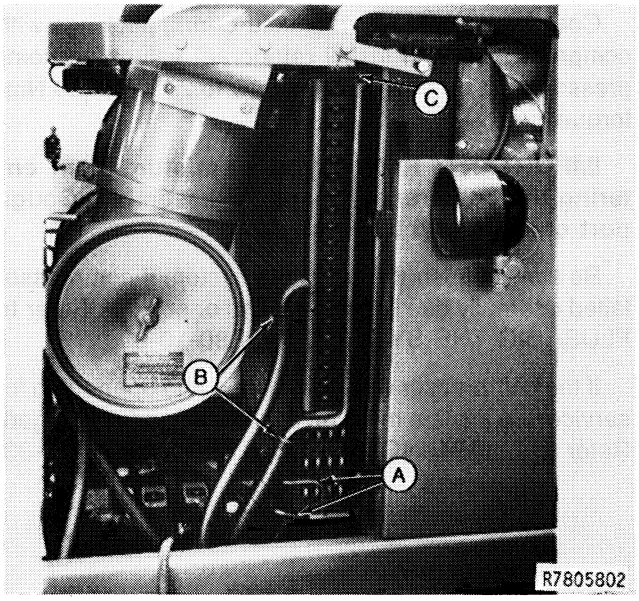

A—Inlet and Outlet Hoses
B—Oil Cooler Hoses
C—Cap Screw

Fig. 51-Removing Condenser (Typical Installation)

1. Disconnect the condenser inlet and outlet hoses (A, Fig. 51).

2. Disconnect the oil cooler hoses (B, Fig. 51).

3. Remove cap screw (C).

4. Remove oil cooler-condenser.

5. Measure the oil from condenser to know how much will be required when repair has been made.

6. Cap or plug condenser and hose fittings.

Repair

1. Remove the caps or plugs from openings. If contamination is evident in condenser, flush system.

2. Examine condenser core for possible restrictions or sources of trouble. The fins should be straight and free of dirt and trash.

3. Cap the outlet connection and install a Schrader-type service valve in the inlet opening.

4. Place refrigerant container in a pail of water heated to a maximum of 125°F (51.5°C) which gives a pressure of 167.5 psi (12 bar).

5. Connect refrigerant supply to the Schrader valve.

6. Open refrigerant container valve and test condenser for leaks with a leak detector (see LEAK TESTING, page 80-10-34). If the aluminum condenser core leaks, replace with a new one.

7. Plug or cap openings until ready to install.

Installation

Reverse the removal steps. Use the torque chart (Group 00, this section) as a guide for tightening connections on pipes and hoses.

NOTE: If the condenser was repaired or replaced with a new one, pour 1 fluid oz. (28 mL) of oil into condenser. If there were any major leaks in the system, refer to CHECKING AND ADDING COMPRESSOR OIL, (page 80-10-31).

Evacuate and charge the system.

RECEIVER-DRYER

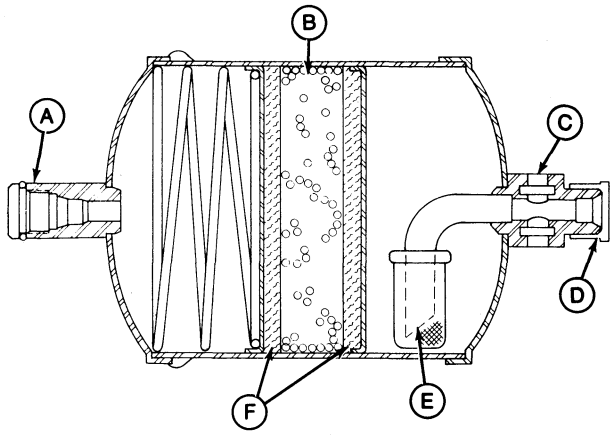

R 25126N

A—Inlet From Condenser
B—Desiccant
C—Sight-Glass
D—Outlet To Expansion Valve
E—Pick-Up Tube
F—Filter Pad

Fig. 52-Cross-Section of Receiver-Dryer

General Information

Fig. 52 shows the receiver-dryer in cross-section. To obtain information on how this unit works, see page 80-10-8.

Removal

1. Depressurize the system as instructed in DISCHARGING THE SYSTEM, page 80-10-30.

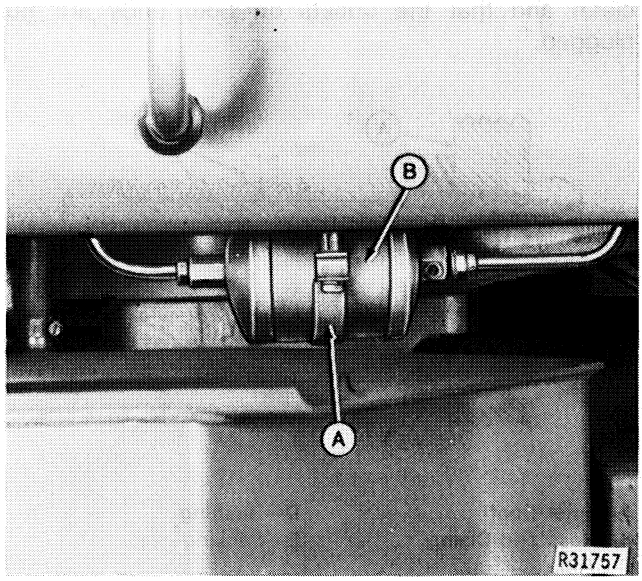

A—Clamp **B—Receiver-Dryer**

Fig. 53-Receiver-Dryer Removal

2. Disconnect the inlet and outlet fittings on receiver-dryer (B, Fig. 53).

3. Remove the receiver-dryer clamp (A) and remove assembly. Cap or plug openings.

4. Plug lines to prevent contamination.

Repair

The receiver-dryer assembly is not repairable. To service a malfunctioning unit, replace with a new one.

Whenever the system is opened up for service and the receiver-dryer is two years old or older, replace the receiver-dryer. When the system is opened up for service and the receiver-dryer is less than two years old, do not replace receiver-dryer unless contamination is found in system.

Always install other system components before installing a new receiver-dryer. This will help keep the receiver-dryer from absorbing additional moisture prior to evacuation.

Installation

1. Reverse the removal procedure for installing unit.

NOTE: Install with the "top" label at the top (12:00) position.

2. Refer to torque chart in Group 00 for tightening refrigerant pipes.

IMPORTANT: Replace receiver-dryer as often as required to prevent moisture from contaminating the system. Be sure to keep new receiver-dryer capped until ready to install. Install receiver-dryer last.

3. Evacuate and charge system (page 80-10-32 and 33).

EVAPORATOR

General Information

The evaporator is constructed of aluminum and greatly resembles an ordinary cooling system radiator. Refrigerant travels through tubes located within the core.

To obtain maximum cooling efficiency, refrigerant must remain in the evaporator for a sufficient length of time to completely vaporize. Too little or too much refrigerant entering the evaporator will limit refrigerant capacity to absorb heat.

The regulatory controls for the evaporator are the expansion valve and the thermostatic temperature control switch.

Removal

1. Depressuize the system as explained in Discharging The System, page 80-10-30.

2. Remove the two cap screws from the top and three cap screws at front of roof.

3. Raise the roof, and remove the cover-to-housing sheet metal screws.

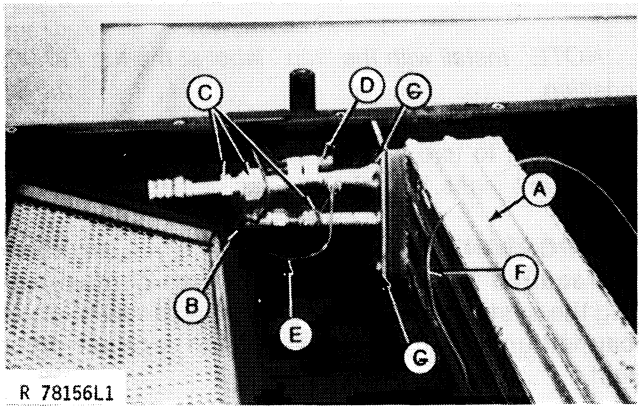

A—Evaporator and Heater Core
B—Expansion Valve
C—Fittings
D—Sensing Bulb
E—Equalizer Line
F—Sensing Tube
G—Cap Screws

Fig. 54-Evaporator and Heater (Late Model Illustrated)

On early model tractors, the evaporator and heater core are two separate units. Operation and service remains the same, except the cooling system will not have to be drained and the heater hoses will not have to be disconnected before the core can be removed.

4. Partially drain cooling system.

5. Remove heater hoses from heater core.

6. Remove insulation from sensing bulb (D, Fig. 54).

7. Remove insulation from expansion valve (B).

8. Disconnect sensing bulb, evaporator inlet and outlet fittings (C).

9. Disconnect expansion valve equalizer line fitting (E).

10. Remove sensing tube (F) from evaporator core. Note location, so that it can be reinstalled in same place.

IMPORTANT: The tube connecting the bulb to the expansion valve contains a low pressure gas. To avoid improper valve action, do not kink or pinch the tube, or dent the bulb.

11. Remove evaporator core mounting screws (G), and lift out core. Note amount of oil that drains from the core.

12. Cap openings.

Repair

If contamination is evident in system, flush components (page 80-10-30).

Accessible minor leaks may be repaired, but the evaporator should be replaced if their is a restriction or a major leak in the core. The core should be tested with at least 50 psi (3.4 bar) when testing for leaks.

Installation

Before installing evaporator, check the condensate drain tray (which is an integral part of the inner roof and directly under the evaporator) to make sure that it is clean and that the outlets on both ends are not plugged.

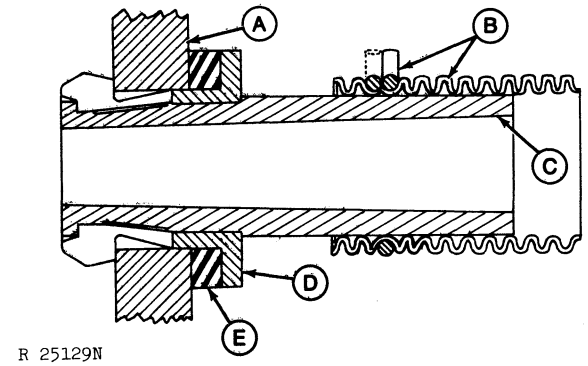

A—Inner Roof
B—Hose and Clamp
C—Tube
D—Bushing
E—Packing

Fig. 55-Condensate Drain Tube and Hose

A drain hose (B, Fig. 55) at each end of the drain tray is routed down through the hollow front members of the body to remove the condensate water to the outside. Each hose is clamped at the upper end of a tube (C) that is interlocked with a bushing (D) and sealed to the condensate tray (inner roof) with rubber packing (E).

Access to the drain tube and hose assembly is obtained by removing the switch panel bezel and rear headliner from inside the body. (See Group 20 of this section for further information.)

If condensate water leaks around rubber packing, break out the tube and remove bushing with packing. Install new packing on bushing and insert into hole. Slip a new tube into bushing, pushing in firmly until it locks in bushing.

1. Inspect drain hose for cracking, splitting, or any other form of deterioration and replace as required.

2. Be sure split hoses on top of body frame front members are in place to protect the drain hoses from chafing.

3. Route drain hose over split hose, but under foam blocks which are just above the split hose.

4. Route drain hose down through body front members and clamp the upper end securely to the drain tube. Make small loop in drain hose and band loop to retain water (trap).

5. Install rubber plug at bottom of posts.

6. Remove caps from evaporator core openings and reverse the removal instructions.

NOTE: Expansion valve sensing bulb, evaporator outlet pipe and temperature sensing tube have to be clean and free from corrosion. Good contact is necessary for proper operation.

7. Install temperature control switch sensing tube in evaporator at same location as when removed. (See page 80-10-53.)

8. Connect hoses and fill cooling system.

9. Bleed air from system if necessary. See "Installation" on page 80-15-2 of this section.

Use care when tightening parts. Refer to the torque chart in Group 30 when necessary.

NOTE: If the evaporator was repaired or replaced with a new one, pour 1.5 fluid oz. (43 mL) of oil into the evaporator. If there were any major leaks in the system, refer to CHECKING AND ADDING COMPRESSOR OIL (page 80-10-31).

10. Evacuate and charge system (page 80-10-32 and 33).

11. Leak check system.

12. Thoroughly wrap expansion valve, sensing bulb, and adjoining section of the inlet refrigeration pipe (Portion within compartment) with insulation tape to prevent condensate drip.

REGULATORY CONTROLS

EXPANSION VALVE

General Information

For information on how the expansion valve works, see page 80-10-8.

Removal

1. Depressurize the system as instructed in Discharging The System, page 80-10-30.

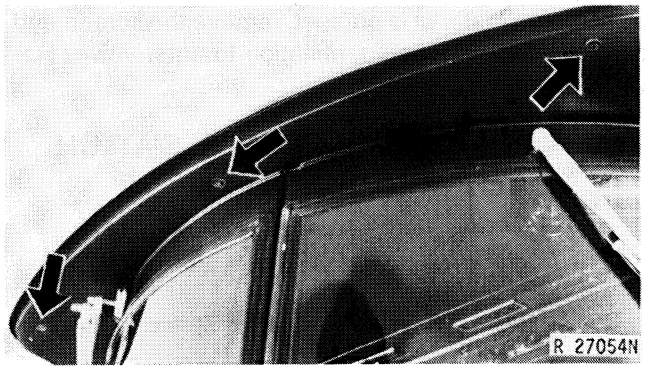

Fig. 56-Roof Mounting Screws

2. Remove the two cap screws from the top and three screws at front of roof (Fig. 56).

3. Raise roof, and remove the cover-to-housing sheet metal screws.

Removal—Continued

4. Remove the insulation from sensing bulb and expansion valve. Fig. 54 shows the insulation removed.

5. Disconnect sensing bulb (D, Fig. 54).

6. Disconnect expansion valve (B) inlet and outlet fittings.

7. Disconnect equalizer line fittings (E).

8. Plug or cap openings after removing valve and bulb.

IMPORTANT: If valve seems to have been operating properly, be careful not to kink or pinch the tube connecting the sensing bulb to the valve body when removing the unit.

Repair

Since there are no external adjustments, an improperly working expansion valve must be replaced by a new one.

Installation

Before installing valve, remove the caps from openings and check screen in valve inlet for foreign material. If foreign material is present, remove the screen and clean. Do not allow contamination to enter valve. Reverse the removal steps.

TEMPERATURE CONTROL SWITCH

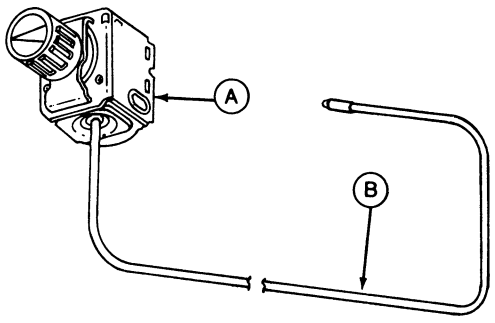

A—Temperature Control Switch **B—Sensing Tube**

Fig. 57-Temperature Control Switch

General Information

The purpose of the temperature control switch (A, Fig. 57) is to regulate the temperature of the refrigerant in the evaporator corresponding to the control knob setting selected by the operator. See page 80-10-9 for information on how the switch operates.

Removal

1. Disconnect battery ground cable.

2. Remove sensing tube from evaporator core (Fig. 54).

3. Remove the control panel retaining screws.

4. Remove control knob from switch.

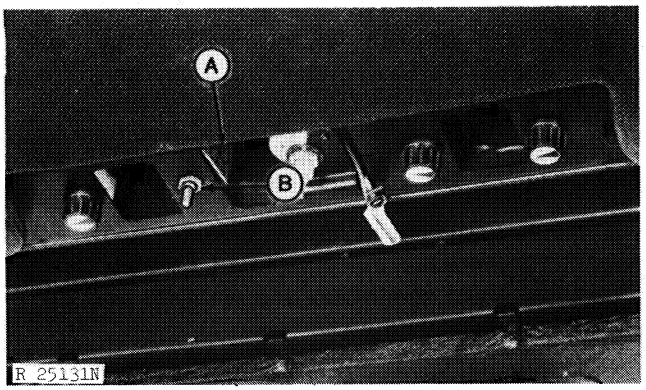

A—Temperature Control Switch **B—Retaining Nut**

Fig. 58-Temperature Control Switch Removal

5. Unscrew switch retaining nut (B, Fig. 58).

6. Disconnect wiring and remove switch (A).

Testing

The temperature control switch is not designed to be repaired as such. However, it should be tested for proper operation.

1. Using an ohmmeter, attach leads to control switch terminals.

2. Fill a container with ice, water, and some rock salt.

3. Insert a thermometer into the water.

4. Set knob on temperature control switch to maximum cooling (turn clockwise).

5. Insert sensing tube into container.

6. After one minute, observe reading on ohmmeter.

7. Ohmmeter should read no continuity (contacts open).

8. Remove sensing tube and hold in hand while observing ohmmeter.

9. Ohmmeter should register continuity (contacts closed).

10. If the switch does not operate properly, replace with a new one.

NOTE: Switches are preset to correctly regulate the temperature in the evaporator.

Installation

The sensing tube should be inserted into the evaporator core between 1st and 2nd refrigerant tubes, 15 in. (381 mm) from left-hand side of evaporator. Push the tube all the way to the bottom.

If frosting of the evaporator core occurs (generally in high humidity areas), move the tube towards the expansion valve, which is on the left end of the core. This means that the tube will be moved towards the frosted area of the core, since the expansion valve end of the core is the coldest end.

Inserting the sensing tube into a colder area of the core will cause the contact points to stay open longer, thus retarding frost on the evaporator core. In low humidity areas, it may be desirable to move the sensing tube closer to the evaporator outlet, especially if the system cycles too frequently.

IMPORTANT: Do not pinch or kink the sensing tube. If necessary to reshape tube to fit into core, avoid making too sharp a bend.

Reverse the removal steps.

COMPRESSOR RELIEF VALVE

General Information

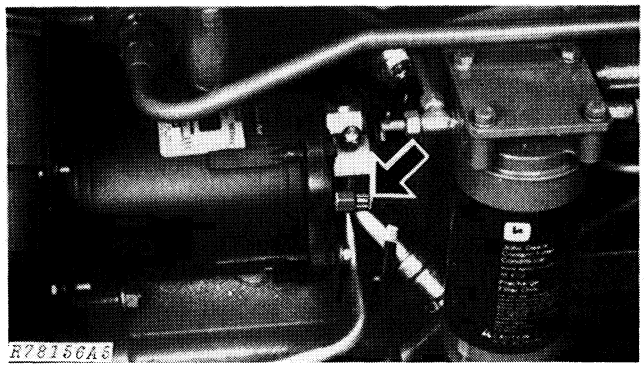

Fig. 59-Compressor Relief VAlve

The compressor relief valve (Fig. 59) is located in the rear head of compressor. To obtain information on how this valve works, see page 80-10-9.

Removal

CAUTION: High pressure may still exist at the discharge fitting. If this pressure is released too rapidly, there may be considerable discharge of refrigerant and oil.

1. Discharge the refrigerant from compressor (page 80-10-30).

2. Slowly remove the valve (Fig. 59) from compesor in case some high pressure still remains.

Repair

The valve is not designed to be repaired. If the valve does not operate properly or has been damaged, replace with a new one.

Before replacing valve, make sure that there is not a malfunction somewhere else in the system.

Installation

1. Install valve on compressor.

2. Add refrigerant as required (page 80-10-31).

AIR INTAKE SYSTEM

PRESSURIZER BLOWERS AND SWITCH

General Information

The pressurizer blowers draw fresh outside air through the air intake openings in cab roof, pulling the air through the air intake filter, evaporator and heater cores, and discharge the conditioned air inside the Sound-Gard Body.

The pressurizer blowers have to be in operation before the air conditioning system will function. Generally speaking, the blowers should be in operation most of the time, not only to direct cooled or heated air into the cab, but to prevent dirt or dust from entering around panels and doors, by pressurizing the inside air.

On 8430 Tractors (6695-) and 8630 Tractors (9367-) a 3-speed, single blower motor was adopted. The following information covers both early and late models.

Blower Removal

8430 Tractor (-6694)
8630 Tractor (-9366)

1. Remove the two cap screws from the top and three screws from front of roof.

2. Raise roof, and remove the cover-to-housing sheet metal screws.

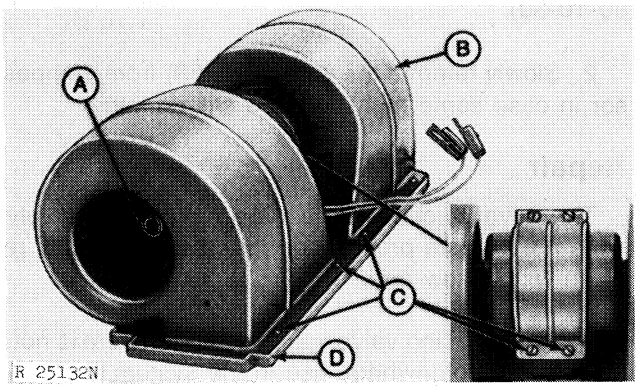

A—Retainer Clip
B—Blower Housing
C—Screws
D—Mounting Base

Fig. 60-Blowers and Housings (Shown Attached to Mounting Base For Illustration Purposes)

The blower and motor assembly (Fig. 60) may be removed without removing the mounting base (D) since the blower housings (B) are individually replaceable.

3. Remove the four housing-to-mounting base screws and the four motor mounting screws (C).

4. Disconnect wiring connectors and lift out assembly.

The mounting base is fastened to rubber cushions using bolts with self-locking nuts. To gain access to the mounting bolts, first remove the air louver bezel (which is secured with 14 screws) from inside the body. Bolt heads will then be in direct view.

5. Blowers may be removed from the motor shaft on all models after first removing the spring retainer clips.

Repair

The blower motors and switch are not repairable. If the motor or switch fail to perform satisfactorily, the part should be replaced.

Installation

Place assembly in position and reverse removal steps.

Blower Removal

8430 Tractor (6695-)
8630 Tractor (9367-)

1. Remove the two cap screws from the top and three screws from front of roof.

2. Raise roof, and remove the cover-to-housing sheet metal screws.

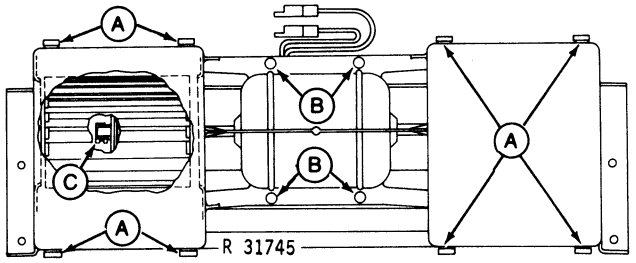

A—Clips
B—Screws
C—Blower Retaining Clips

Fig. 61-Blower Assembly

3. Remove the four screws (A, Fig. 61) securing upper half of housing to lower half.

4. Remove the eight clips (B), and lift off upper half of housing.

5. Disconnect blower motor wiring connectors. The blower motor with blowers can now be lifted from lower half of housing.

6. To remove a blower from the drive shaft, remove retainer clip (C) and slide blower from shaft.

Blower Switch Removal

1. To remove blower switch, remove the air louver bezel retaining screws and bezel (if not done previously).

2. Remove switch control knob.

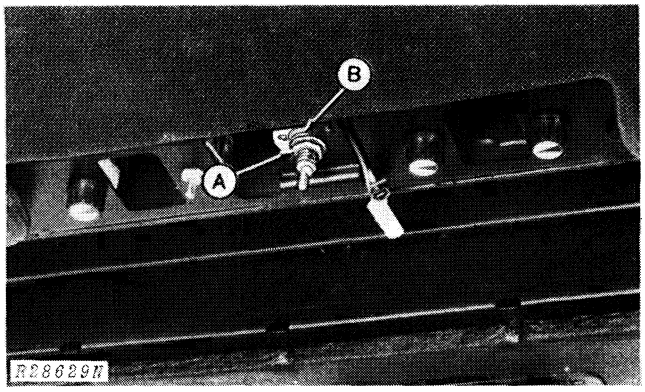

A—Retaining Nut **B—Blower Switch**

Fig. 62-Blower Switch Removal

3. Unscrew switch retaining nut (A, Fig. 62).

4. Disconnect wiring and remove switch (B).

Repair

The blower motors and switch are not repairable. If the motor or switch fail to perform satisfactorily, the part must be replaced.

Installation

Place assembly in position and reverse removal steps.

AIR FILTERS

Removal

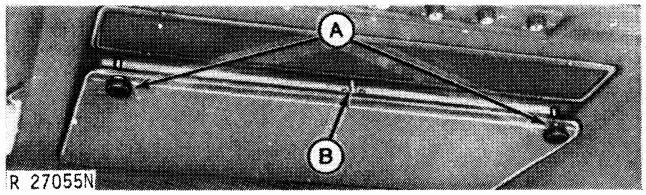

A—Access Knobs **B—Safety Catch**

Fig. 62-Access Door

Loosen the knobs (A, Fig. 62) to open the filter access door.

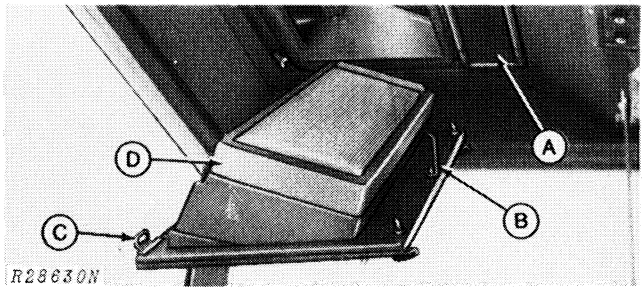

A—Foam Recirculating Filter
B—Safety Catch
C—Access Door
D—Filter Element

Fig. 63-Air Filter Element

Depress the safety catch (B, Fig. 63) at the front of the door and remove the door (C) and filter (D).

Service

Clean the filters by one of the following methods:

A. Tapping
   Tap filter gently on a flat surface—dirty side down.
B. Compressed Air
   Direct compressed air (100 psi maximum) (7 bar) (7 kg/cm²) through filter.
C. Water Washing
   1. Soak filter in warm water and R36757 John Deere Cleaner for 15 minutes.
   2. Rinse until clean (maximum water pressure - 40 psi (3 bar) (3 kg/cm²).
   3. Air dry - do not use compressed air.

Replace filter if ruptured, or if not cleanable.

NOTE: The recirculating filter MUST be kept clean or cooling efficiency will be reduced considerably.

Installation

Carefully place filter element on door and install door. Tighten knobs securely.

Litho in U.S.A.

Group 15
HEATING SYSTEM

SYSTEM OPERATION

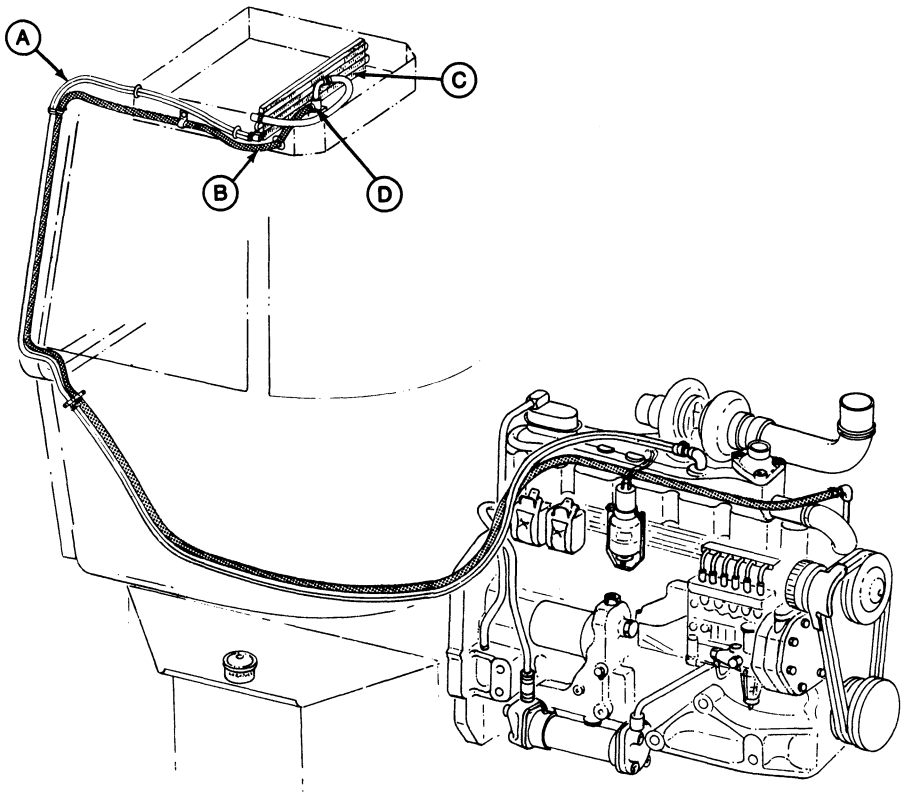

R 25143N

A—Supply Hose (White Stripe, From Water Manifold)
B—Return Hose
C—Heater Core
D—Heater Valve

Fig. 1-Heating System (8630 Illustrated)

GENERAL INFORMATION

Referring to Fig. 1, coolant from the engine block or water manifold (A) is carried by hoses and pipes to the heater core (C), and then to the heater valve (D). The purpose of the valve is to permit or restrict flow of coolant as desired by the operator.

When the valve is open, coolant returns to the water pump by-pass through a return hose (B).

The blower draws air through the heater core and directs it inside the body. On both air conditioned and non-air conditioned bodies, the blower used for heating is the same one used for pressurizing.

NOTE: Late models have the evaporator core and heater core combined into a single unit. The principle of operation is the same as those with separate units.

DIAGNOSIS AND TESTING

PRELIMINARY CHECKS

When experiencing heating system problems, first perform the following preliminary checks:

1. Determine if the engine coolant is at the proper level and sufficiently warm to give the desired heating results.

2. Check system air filters for restrictions.

3. Check for drafts around doors and panels.

4. Check heater hoses for restrictions.

ELECTRICAL TESTING

When an electrically operated component in the system fails to function properly, make the following preliminary checks:

1. Determine if adequate voltage is being supplied to the malfunctioning component.

2. Visually check for a loose connection or a broken wire.

If the source of trouble has not been found, after making the preliminary checks, test the system for an open circuit within each component. Use the wiring diagrams (Section 40, Group 5) as a guide for determining each circuit location.

DIAGNOSING MALFUNCTIONS

Proceed with the following list of symptoms and causes when the preliminary checks have been performed and the system still fails to operate properly.

Insufficient Heating

Faulty engine thermostat
Foreign material in heater core or hoses
Heater valve not working properly
Pressurizer blowers not working properly
Obstruction in air inlet

Inadequate Removal of Ice or Fog

Redirect air louvers
Pressurizer blowers not working properly
Heater valve not working properly

Heater Valve Not Shutting Off Coolant Flow

Inlet and outlet hoses reversed
Defective valve

SYSTEM COMPONENTS

HEATER VALVE

General Information

The heater valve shown in Fig. 2 is a device for controlling engine coolant circulation in the heater core. Opening the valve allows coolant to circulate through the core, while the pressurizer blowers draw in air through the heater core to give the desired heating effect.

The valve is designed so that the coolant flows from the heater core outlet to the top (long "leg") of valve and out the bottom (short "leg") of valve. The quantity of coolant flowing through the valve depends upon the control setting, varying from no flow through maximum flow.

A direct-mounted control knob on the cab console regulates the valve.

Removal

Drain a portion of the cooling system, and remove control knob.

Remove the two cap screws from the top and three screws at front of roof. Raise roof, and remove the cover-to-housing sheet metal screws.

Disconnect valve inlet and outlet hoses (Fig. 2).

Remove the cap screws attaching the heater valve to the mounting bracket.

Remove valve.

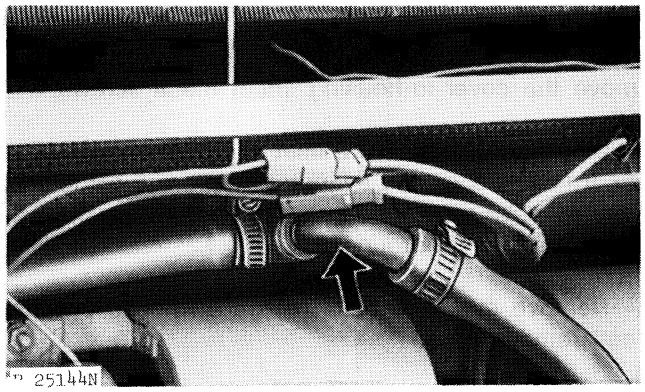

Fig. 2-Heater Valve

Repair

The valve is not designed to be repaired internally. If the valve fails to shut the coolant off completely or otherwise fails to perform properly, replace with a new one. Be sure the heater hoses are correctly connected to the engine. If hoses are reversed, a satisfactory heater valve will not operate properly, and may be permanently damaged.

Installation

Reverse the removal steps, making sure the hose clamps properly seal hoses to prevent leaking. Connect the heater core outlet (upper front corner) hose to the valve inlet (long leg). The return hose connects to the valve outlet (short leg).

Fill cooling system. Start engine and check for proper operation.

HEATER CORE

General Information

The heater core (B, Fig. 3), is constructed of aluminum and is similar to a cooling system radiator.

The pressurizer blowers draw air through the heater core and blow the air through the air outlet panel into body.

Coolant enters the heater core at the lower rear fitting, flows through the core and out the outlet fitting at upper front corner.

Removal

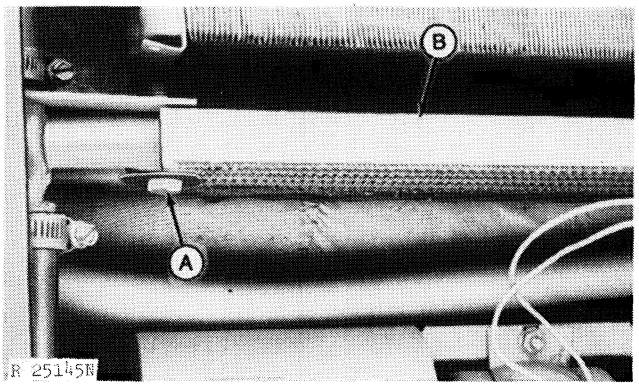

A—Mounting Bolt **B—Heater Core**

Fig. 3-Heater Core

Removal—Continued

Drain a portion of the cooling system.

Remove the two cap screws from the top and three screws from front of roof. Raise roof, and remove the cover-to-housing sheet metal screws.

Disconnect heater core inlet and outlet hoses (Fig. 3). If heater core and evaporator core are combined, depressurize refrigerant in system before disconnecting fittings. See Group 10.

Remove mounting bolts (A) on each end of core, and remove core.

Repair

The heater core should be tested for leaks whenever a repair is made. Cap or plug the outlet and apply air pressure at 15 psi (1 bar) to the inlet opening to test. If the core cannot be satisfactorily repaired, replace with a new one.

Fins should be straight and free from obstructions.

Installation

Connect supply hose (with white stripe) to the heater core inlet at lower rear corner. Connect outlet hose to heater valve inlet (long leg). Tighten hose clamps securely.

Fill the cooling system as required. Start the engine and run long enough to make sure that all the air has been purged from the system.

If air remains in the system, loosen one of the hoses at the heater valve and allow the air to escape. Tighten the hose clamp and finish filling cooling system to the correct level.

HEATER BLOWERS

Forced circulation of the heated air is accomplished by the pressurizer blowers. Refer to page 80-10-29.

HEATER PIPES AND HOSES

Carefully inspect the heater system pipes and hoses (Fig. 4) for possible sources of trouble whenever a repair is made on the system. All connections should be checked for prior leakage. Hoses that are frayed, or otherwise appear questionable, should be replaced.

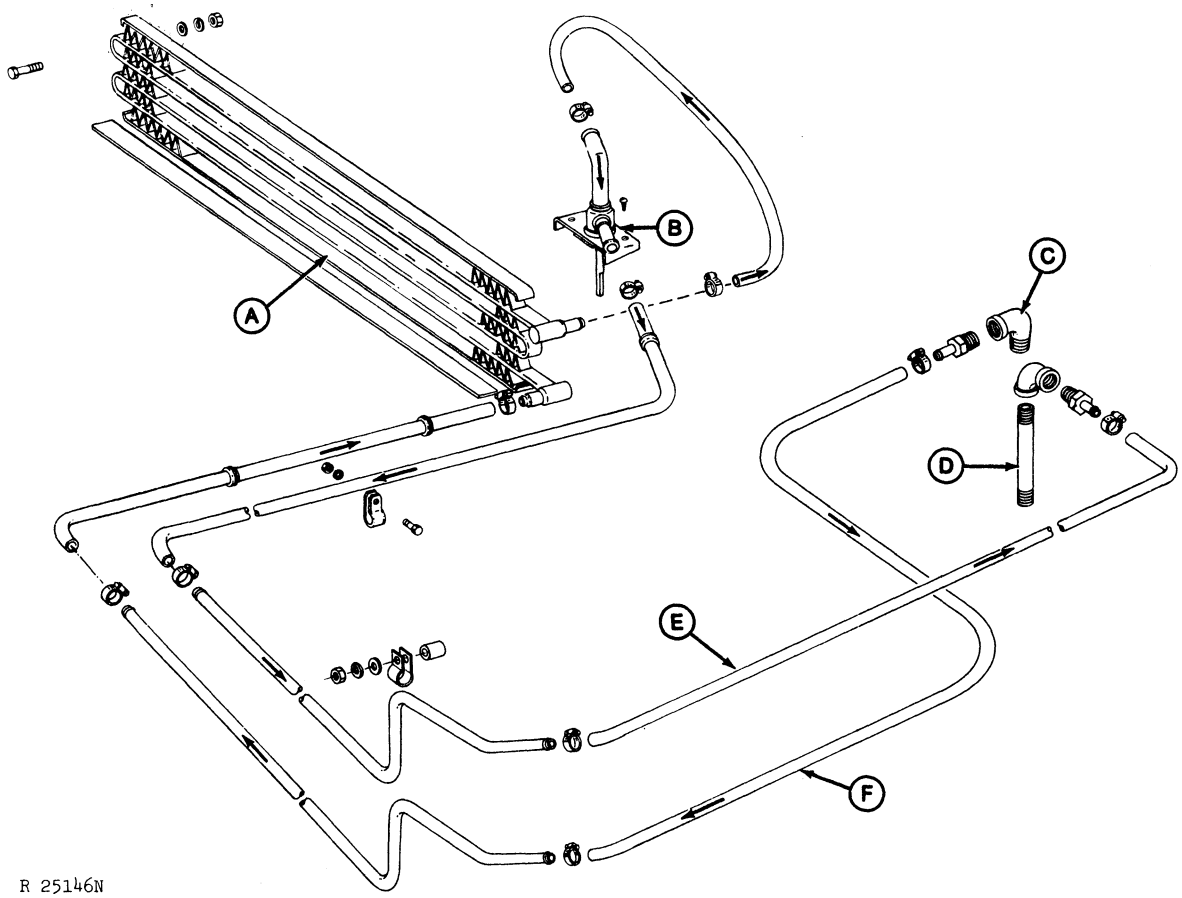

A—Heater Core
B—Heater Valve
C—Supply From Water Manifold or Engine Block
D—Return To Water Pump
E—Return Hose
F—Supply Hose

Fig. 4-Heating System Pipe and Hose Installation (Tractors With Separate Heater Core)

Litho in U.S.A.

Group 20
SEAT

PERSONAL POSTURE SEAT

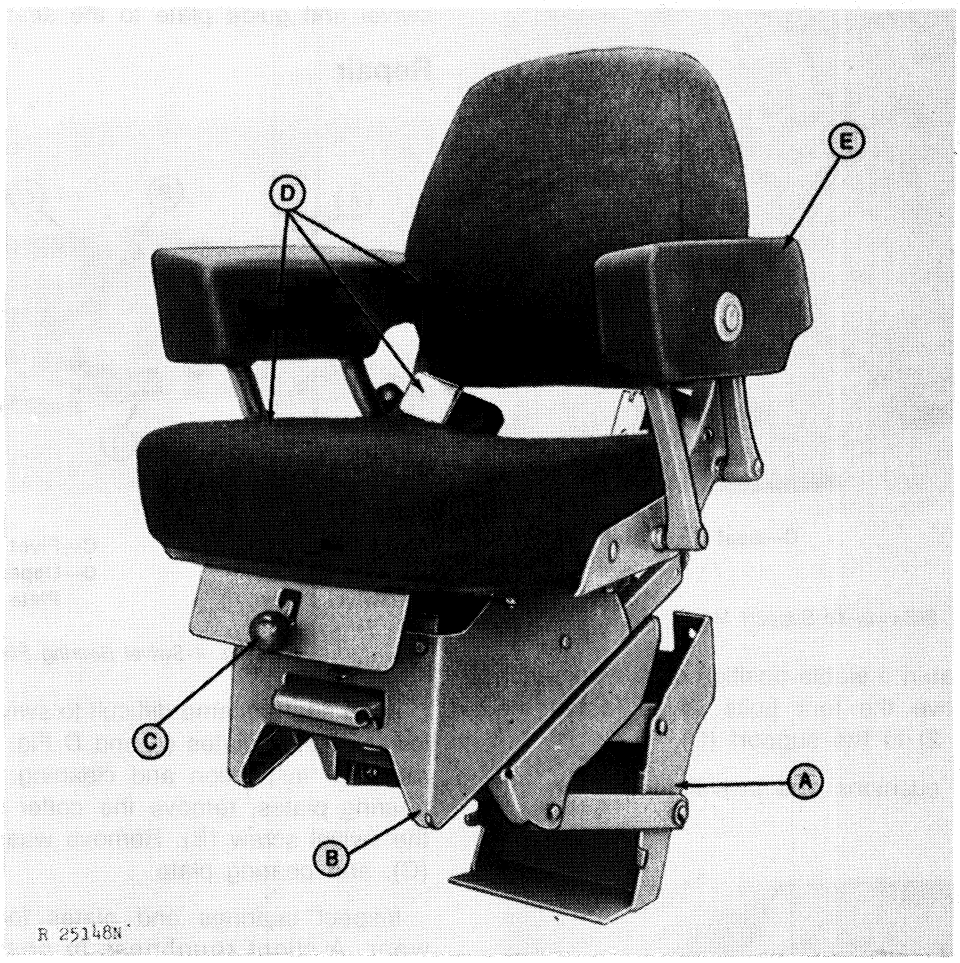

A—Suspension Assembly
B—Seat Support Assembly
C—Swivel and Latch Assembly
D—Cushions and Seat Belts
E—Armrest Assembly

Fig. 1-Personal Posture Seat Assembly

GENERAL INFORMATION

The Personal Posture Seat is comprised of the suspension assembly (A, Fig. 1), seat support assembly (B), swivel and latch assembly (C), armrest assembly (E), cushions and seat belts (D). It is mounted in the Sound-Gard Body with four cap screws which secure the seat base (suspension support) to the body floor and rear panels.

It is usually best to completely remove the seat assembly from the Sound-Gard Body when service is required. However, parts that are readily accessible (such as the armrests) may be removed without removing the entire assembly.

When assembling component parts, tighten all screws to a torque value equivalent to the size of the screw. Refer to chart in Group 30 of this section.

Always exercise normal safety and handling precautions when removing or installing the seat to prevent personal injury or damage to parts.

Litho in U.S.A.

SWIVEL AND LATCH ASSEMBLY

Removal

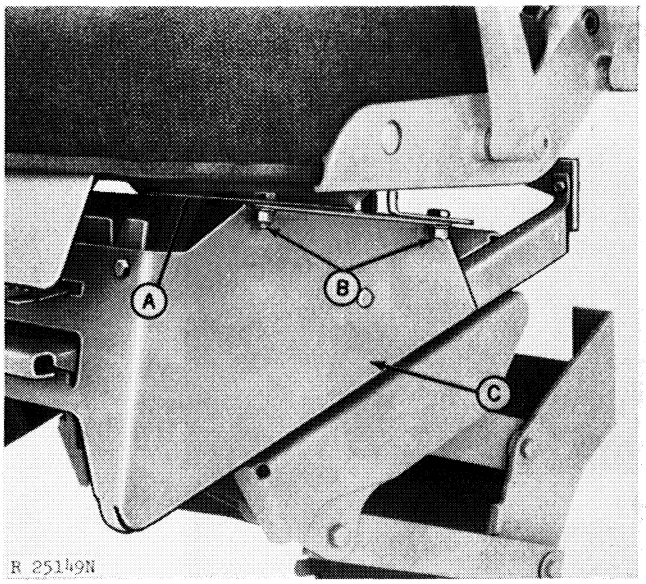

A—Swivel
B—Bolts
C—Seat Support

Fig. 2-Swivel-To-Support Mounting

Place the seat in a stable position on a workbench or table. Remove the four bolts which fasten the swivel (A, Fig. 2) to the support (C).

Lift the seat cushions and swivel mechanism off the support.

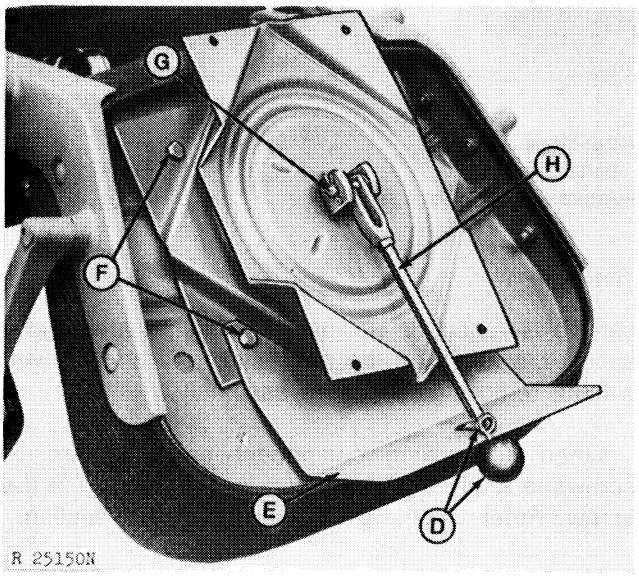

D—Knob and Spring
E—Guide Plate
F—Cap Screws
G—Pin
H—Latch Rod

Fig. 3-Swivel and Latch Rod

Remove the knob and spring (D, Fig. 3), and washer from latch rod (H). Remove pin (G) to disconnect rod from bracket and pull rod out of guide plate (E).

Remove four cap screws (F) which secure the swivel and guide plate to the seat. Lift off parts.

Repair

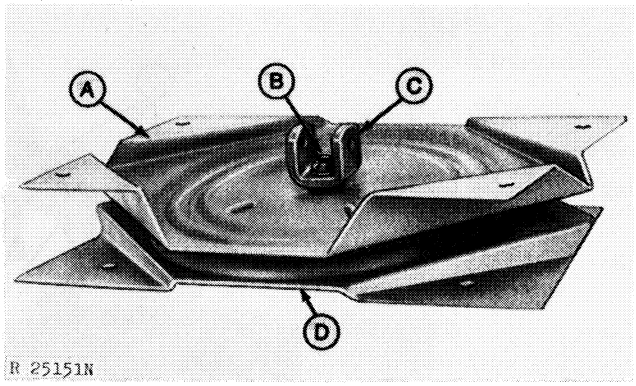

A—Lower Bearing Plate
B—Swivel Screw
C—Pivot Bracket
D—Upper Bearing Plate

Fig. 4-Swivel Bearing Plates

If the seat became difficult to swivel, the upper and lower bearing plates (A and D Fig. 4) may be separated for inspection and cleaning. To separate the bearing plates, remove the cotter pin and nut from the swivel screw (B). Remove washer, pivot bracket (C), and bearing plate.

Inspect bearings and plates for roughness and wear. A slight roughness in bearings or bearing channels may be smoothed up by polishing with a metal polishing cloth. Replace the upper and lower bearing plate assembly if unable to polish parts satisfactorily.

Clean parts thoroughly, but do not lubricate. Assemble both bearing plates and pivot bracket together using a flat washer, hex nut, and cotter pin. Tighten hex nut just enough to obtain a light drag on plates. Install cotter pin.

Installation

Position swivel bearing plate assembly and guide plate on seat (Fig. 3), and secure with cap screws. Install latch rod, spring, washer, and knob.

Fasten seat and swivel on seat support assembly (Fig. 2) with four bolts.

Mount seat in body and tighten all screws.

Litho in U.S.A.

ARMREST ASSEMBLY

Removal

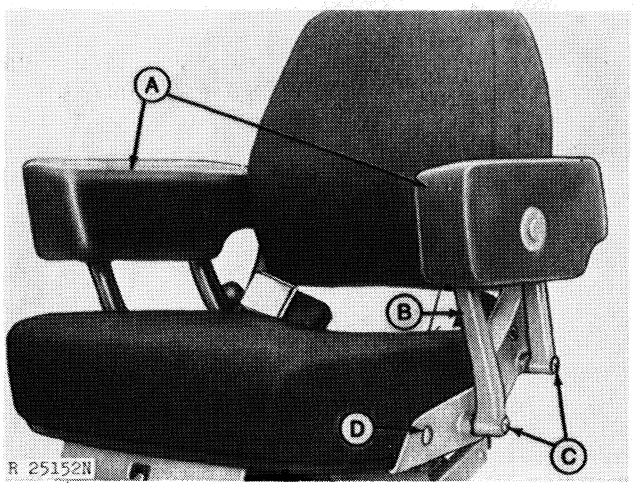

A—Armrests
B—Link
C—Screws
D—Cushion Support

Fig. 5-Armrests

The armrests with links (A and B, Fig. 5) may be removed after removing the seat belts and taking out the special screws (C) which fasten the links to the cushion supports. See Fig. 7.

To disassemble armrests, align cut-out notch in upper corner of latch plate (J, Fig. 6) with the latch key (I), and remove key from armrest. Unscrew button (F), and remove spring and cup from latch key.

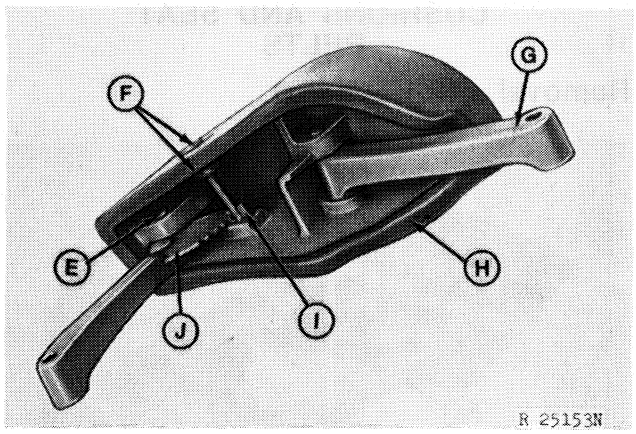

E—Pivot Pin
F—Button and Cup
G—Link
H—Cushion
I—Latch Key
J—Latch Plate

Fig. 6-Armrest Disassembly Locations

Remove armrest cushion (H) from armrest. Drive out link pivot pins (E) from armrest and remove links (G). If necessary, remove latch plate from front link by removing the round headed retaining bolt.

Repair

Inspect parts for wear, replacing as needed. Proper cperation should be the determining factor for parts replacement.

Installation

Reassemble armrest parts, referring to Fig. 6 and 7. Install armrests on cushion supports. Raise and lower armrest to make sure that links pivot without binding.

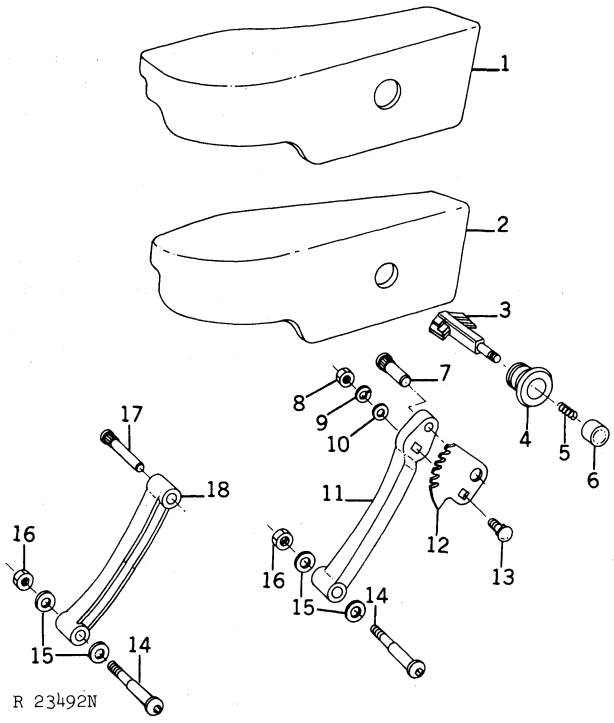

1—Armrest Cushion
2—Armrest
3—Latch Key
4—Cup
5—Spring
6—Latch Button
7—Pin
8—Special Hex Nut
9—Special Lock Washer
10—Special Washer
11—Link (Front)
12—Latch Plate
13—Special Bolt (Rd. Head)
14—Special Screw
15—Special Lock Washer
16—Special Hex Nut
17—Pin
18—Link (Rear)

Fig. 7-Exploded View of Armrest Assembly

CUSHIONS AND SEAT BELTS

Removal

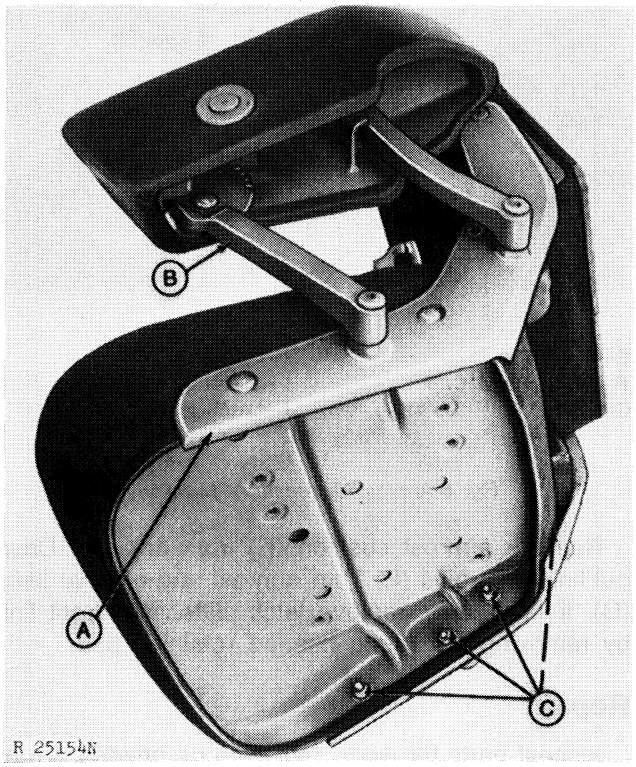

A—Cushion Support
B—Link
C—Attaching Screws

Fig. 8-Cushion Support

Separate the cushions and armrests from the swivel and latch assembly (page 20-2). Remove the seat belts from the cushion supports (A, Fig. 8).

Disconnect the armrest link (B) and seat cushion attaching screws (C) from the cushion support. Remove armrests and seat cushion.

Remove both screws (E, Fig. 9) which fasten the backrest cushion to the cushion supports. Separate supports from pivot plates (I).

The backrest tilt mechanism is contained in the right-hand cushion support (Fig. 10). The left-hand support is a one-piece casting, having no internal parts.

To disassemble the tilt mechanism, remove the screws (9) and cover plate (10). Unscrew the knob (8) and remove slide (5), friction plate (6), and springs (7). Slip bushing (2) off pivot plate (3).

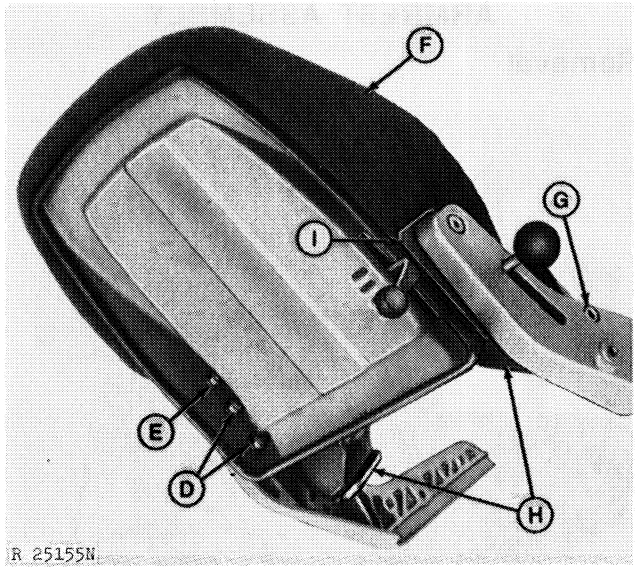

D—Pivot Plate Screws
E—Support-To-Backrest Screw
F—Backrest Cushion
G—Seat Belt Attaching Screw
H—Seat Belts
I —Pivot Plate

Fig. 9-Backrest Cushion and Seat Belts

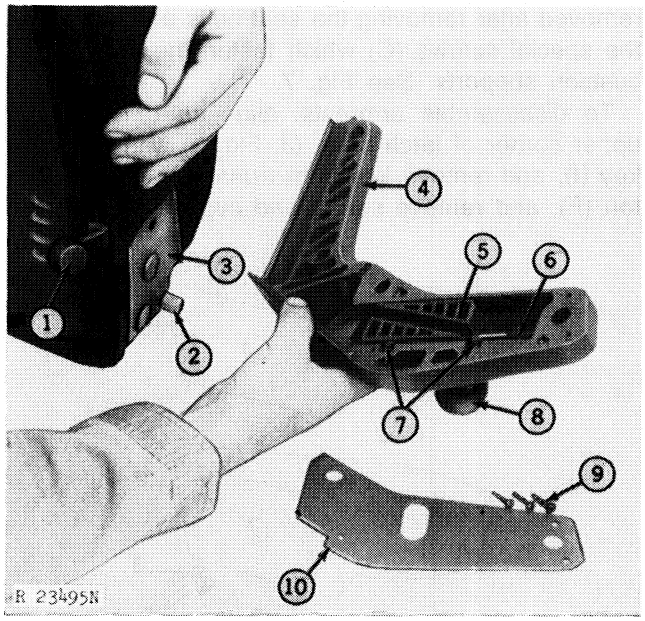

1—Lumbar Adjustment Lever
2—Bushing
3—Pivot Plate
4—Cushion Support
5—Tilt Adjuster Slide
6—Friction Plate
7—Springs
8—Knob
9—Cover Plate Screws
10—Cover Plate

Fig. 10-Backrest Tilt Mechanism

Repair

Inspect support (4), slide (5), and friction plate for wear. Springs (6) must exert a firm pressure on plate to keep slide in position. Bushing (2) should rotate freely on pivot plate pin (3), and not bind in slide. Replace parts as required.

Both seat belts should be in good general condition and operate properly. Always replace a seat belt having a questionable condition.

Installation

Install cushion supports on backrest cushion (Fig. 9), and attach seat belts to supports.

Fasten seat cushion and armrests to supports (Fig. 8).

Install swivel and latch assembly on seat pan and to support assembly (page 20-2).

SEAT SUPPORT ASSEMBLY

Removal

Separate the swivel and latch assembly from the seat support assembly (page 20-2).

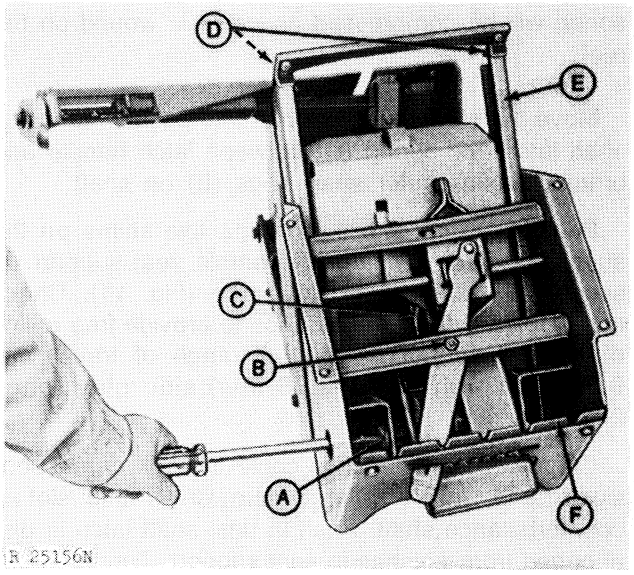

A—Shaft
B—Pivot Screw Nut
C—Cable
D—Stops
E—Rail
F—Swivel Latch Plate

Fig. 11-Seat Support Assembly

Remove the seat rail stops (D, Fig. 11) from ends of rails (E).

Insert a large screwdriver into slotted shaft (A) through hole in support frame. Push in on screwdriver to disengage counterbalance shaft latch (see Fig. 14) from notches in bracket (Fig. 13), allowing shaft reel spring to unwind. Disconnect cable (C) from hook in suspension frame.

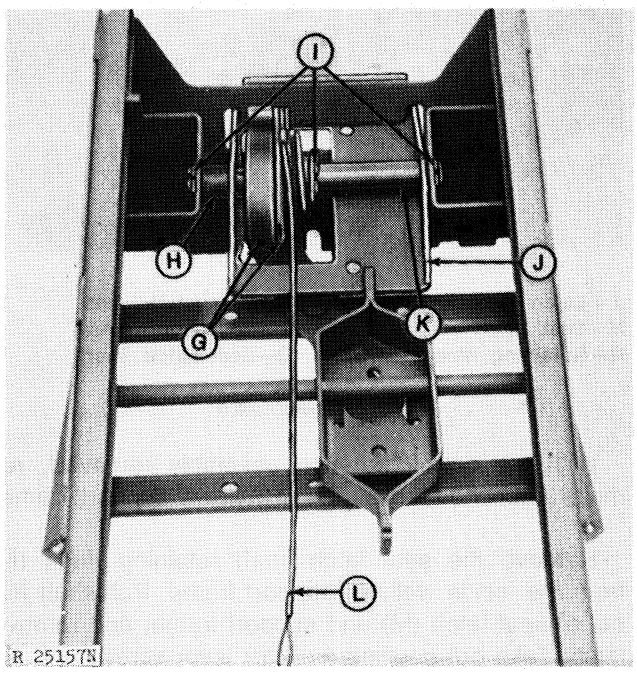

G—Reel Spring and Reel
H—Latch Spring
I —Snap Rings
J—Latch Handle
K—Counterbalance Shaft
L—Cable

Fig. 12-Seat Support Separated From Suspension

Slide seat support off suspension assembly. Fig. 12 shows the seat support assembly removed. Remove rollers (with shims) from suspension frame shafts (8, Fig. 23). To facilitate installation, keep the rollers and their respective shims together so that less time will be required to adjust the rail-to-roller clearance (page 20-10).

Remove snap rings (I) from both ends of counterbalance shaft (K). Move shaft to the right (in direction opposite slotted end). Remove shaft latch (J), latch spring (H), reel spring and reel (G) from shaft.

Remove middle snap ring from groove, and move shaft to left (in direction of slotted end). Pull shaft out of hole in support frame as washer and middle snap ring are removed from shaft.

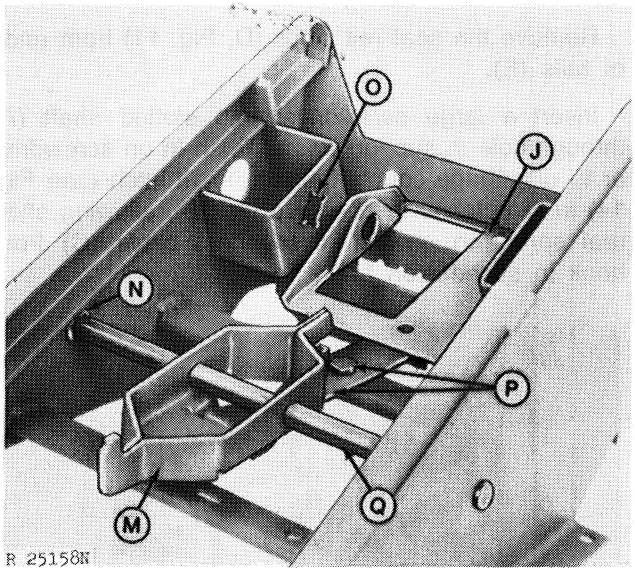

J—Latch Handle
M—Seat Latch
N—Retaining Ring
O—Bracket Notches
P—Lever and Screw
Q—Seat Latch Shaft

Fig. 13-Seat Latch

With the counterbalance assembly removed, remove latch handle (J, Fig. 13) from support frame.

Remove the seat latch shaft retaining rings (N) from the inside walls of support frame. Pull shaft (Q) out of seat latch (M) and support frame, and remove latch. Take out position selector lever screw, and remove lever (P).

Repair

Inspect all parts for wear or damage. Satisfactory operation should be the determining factor in replacement of parts.

If counterbalance reel cable needs replacing, be sure reel spring pin is installed flush with reel on the cable winding side.

Installation

Install seat latch mechanism in reverse order of removal. Make sure retaining rings are correctly positioned in shaft grooves (Fig. 13) and that latch handle is inserted in slot of seat latch.

Install counterbalance assembly in seat support. Fig. 12 and 14 shows the relationship of parts.

Insert counterbalance shaft (A, Fig. 14) in support bracket and into latch handle. Place flat washer and snap ring (E) on shaft, then move

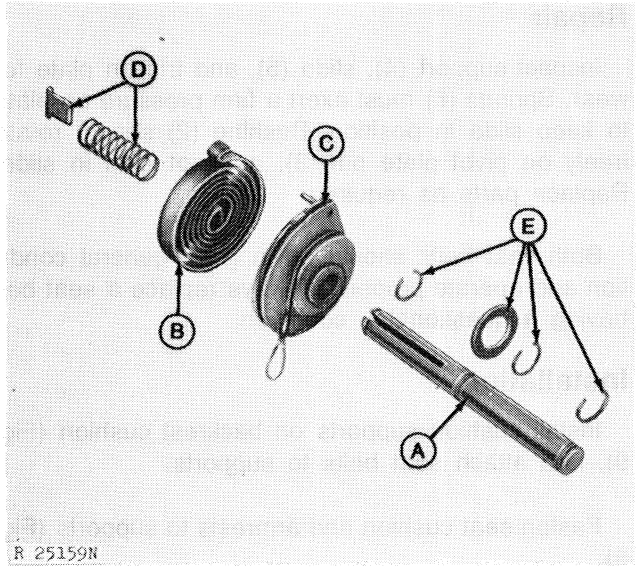

A—Counterbalance Shaft
B—Reel Spring
C—Reel
D—Counterbalance Shaft Latch and Spring
E—Snap Rings and Washer

Fig. 14-Exploded View of Counterbalance Assembly

shaft inward far enough to install reel (C) and reel spring (B). Reel spring must be installed so that spring will be compressed as cable is wound on the reel.

Move the slotted end of shaft into position to install shaft latch and spring (D) between latch handle and bracket. Install outer snap rings (E) on shaft.

Position rollers with their respective shims on the suspension frame shafts. Assemble seat support on suspension, and install rail brace (Fig. 11). Check rail-to-roller side play clearance to provide free rolling of support throughout the full range of travel with 0.005-0.030 in. (0.13-0.76 mm) side play (page 20-10).

Connect counterbalance cable to hook on suspension frame. Insert a large screwdriver into slot in counterbalance shaft. Push in until shaft latch is disengaged from notches in seat support. Turn counterbalance shaft clockwise (to tighten spring) until reel spring will pull seat support from its extreme forward position to its extreme rearward position. Engage latch in support notch and check operation.

Place the position selector lever in any one of the notches in support frame ranging from "short" to "tall". Center the seat latch in its respective slot in the suspension frame, and tighten pivot screw nut (B, Fig. 11).

Attach seat with swivel to the seat support (page 20-2), and mount in body.

Litho in U.S.A.

SUSPENSION ASSEMBLY

Removal

Separate the seat with swivel from the seat support assembly (page 20-2).

Separate the seat support assembly from the suspension assembly (page 20-5).

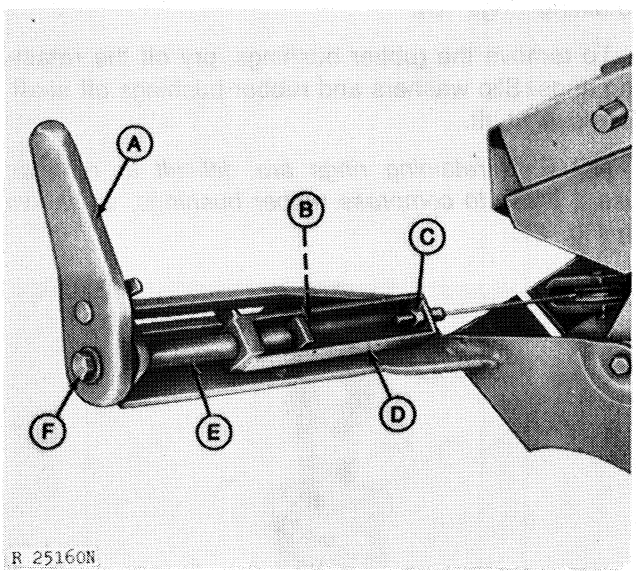

A—Ratchet Lever
B—Spring Pin
C—Lock Nuts
D—Yoke
E—Weight Adjustment Screw
F—Cap Screw

Fig. 15-Weight Adjustment Control

Operate the rachet lever (A, Fig. 15) and turn the weight adjustment screw (E) far enough to permit yoke tab (indicator) to travel to the bottom of slot, which is the 100 lb. scale reading.

Disconnect the weight adjustment cable from yoke (D) by unscrewing lock nuts at threaded end of cable. Pull end of cable out of yoke.

The weight adjustment screw and ratchet lever may be removed after removing the spring pin (B) from end of screw (E). The ratchet lever is fastened to the weight adjustment screw with a special self-locking cap screw (F) and plain washer. Note the washer (34, Fig. 23), which is positioned on the weight adjustment screw next to ratchet lever.

Remove cable (G, Fig. 16) from upper pulley and from weight adjustment pulley (I). Remove the upper pulley pin (H) and remove pulley from its clevis.

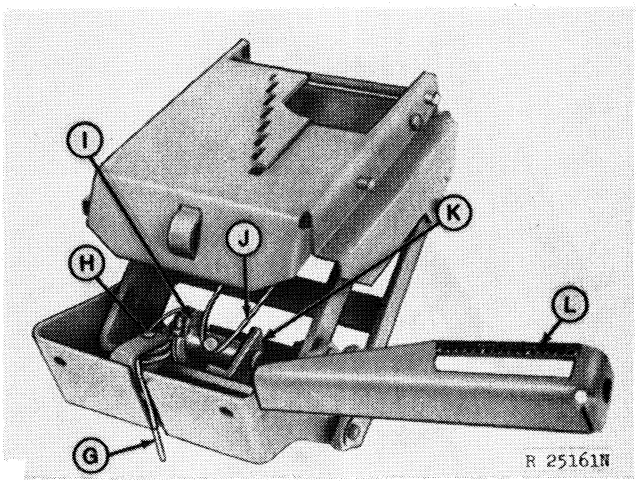

G—Upper Cable
H—Upper Pulley Pin
I —Weight Adjustment Pulley
J—Lower Cable
K—Bracket
L—Weight Scale

Fig. 16-Control Cables and Pulleys

Unhook the lower cable (J) from special drive screw on pulley shaft. Take off one of the pulley shaft mounting brackets (K), and remove shaft.

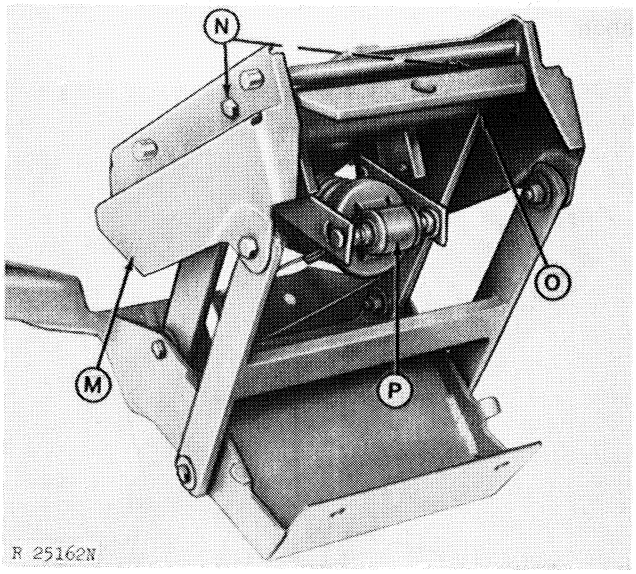

M—Suspension Frame
N—Screws
O—Arm Assembly
P—Shock Absorber

Fig. 17-Arm Assembly Screws

Remove the two front screws (N, Fig. 17) which secure the arm assembly (O) to the suspension frame (M). Carefully lower the arm assembly while raising up rear end of suspension frame at the same time. Doing so, permits the upper end of shock absorber (P) to separate from its mounting (half-circle bulge at rear of suspension frame). See Fig. 16.

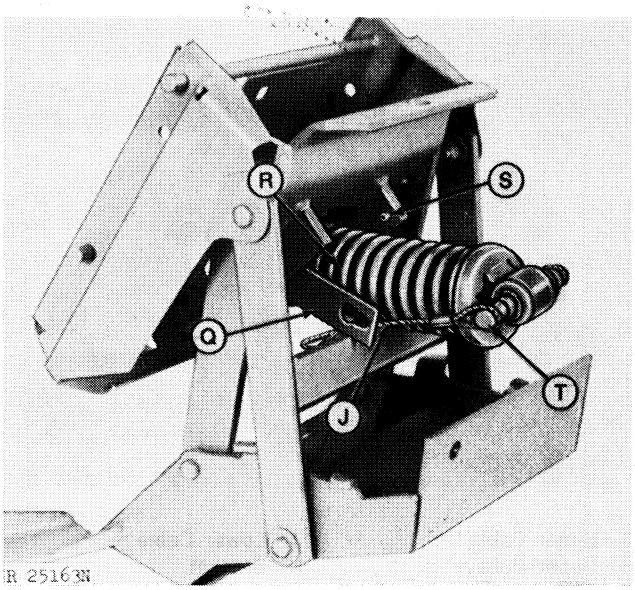

J—Lower Cable
Q—Shaft Link
R—Spring
S—Link Stop Pin
T—Shaft

Fig. 18-Removing Shock Absorber and Spring

Move shock absorber and spring assembly (R, Fig. 18) upward to disengage the shaft (U) from links (Q). Remove shock absorber from suspension frame and arm. Then remove cable (J) from shock absorber shaft.

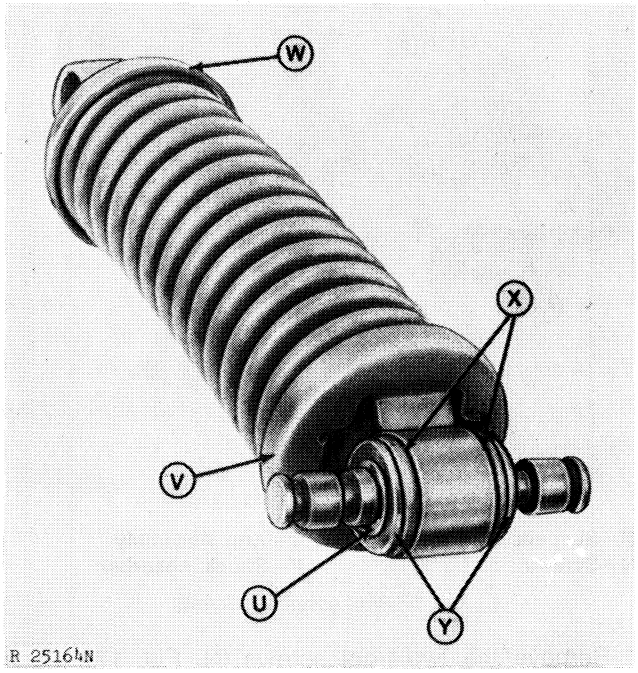

U—Retaining Ring
V—Lower Spring Cap
W—Upper Spring Cap
X—Rubber Bushings
Y—Washers

Fig. 19-Shock Absorber and Spring Disassembly Locations

The suspension link and arm assemblies pivot on bushings secured to the suspension base and frame (Fig. 23). To separate these parts, simply remove the attaching screws.

Replace rubber bushings (X, Fig. 19) if they show signs of deterioration or wear. The rubber bushings are positioned in the shock absorber mounting ring and secured to the shaft with flat washers (Y) and retaining rings (U).

To remove the rubber bushings, pry off the retaining rings. Slip washers and rubber bushings off shaft. Remove shaft.

NOTE: If retaining rings are difficult to remove, use a press to compress rubber bushings, as shown in Fig. 21.

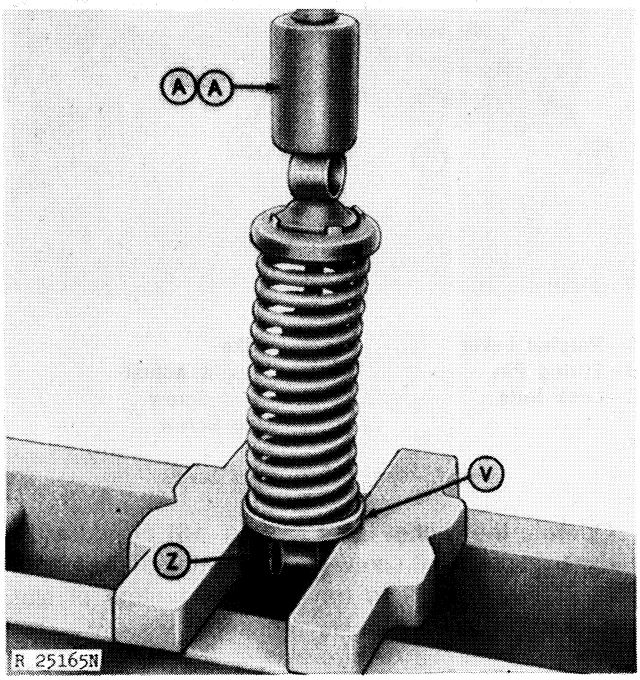

V—Lower Spring Cap
Z—Mounting Ring
AA—Press With "V" Notch Adapter

Fig. 20-Lower Shock Absorber Mounting Ring Partially Turned

Mount shock absorber and spring assembly in a press similar to that shown in Fig. 19, using a "V" notch press adapter (AA) to push against shock absorber upper mounting ring.

CAUTION: Compress spring and disassemble with care to prevent injury.

Removal—Continued

Compress spring and turn lower shock absorber mounting ring (AA) 1/4 turn. Release press. Mounting ring will pass through lower spring cap (V). Remove lower spring cap, spring, and upper spring cap (W, Fig. 19).

Repair

Examine spring for general overall condition. A new spring has a tension of 650-794 lbs (2890.5-3532.5 N) when compressed 5.26 in. (133.5 mm).

Replace shock absorber if it does not offer acceptable resistance to both compression and extension when held vertically with shock absorber body down.

Examine cables, pulleys, bushings, and races for wear or damage. Replace any of these parts if they are worn beyond an acceptable amount, or when they do not function properly.

Installation

Assemble the upper spring cup, spring, and lower spring cup on shock absorber. Compress spring (Fig. 20) a sufficient amount to permit mounting ring to be rotated 1/4 turn.

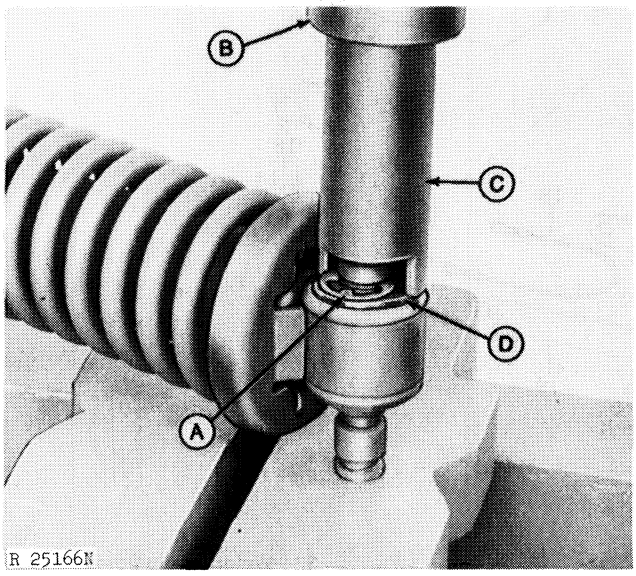

A—Retaining Ring
B—Press
C—Special Adapter
D—Washer

Fig. 21-Installing Retaining Ring On Shock Absorber Shaft

Insert shaft (Figs. 18 and 19) into mounting ring, and install rubber bushings. Using a rubber lubricant on the bushings will be helpful for installing retaining rings.

Install washer and retaining ring on one end of shaft (Fig. 19). Place that end of shaft down on base of press and install the other washer.

Using an adapter made from a piece of pipe the size of washer and having a large notch cut out on one end (Fig. 21), compress bushing and install retaining ring. Release press. Check assembly to make sure all parts are correctly installed.

If the weight adjustment pulley assembly (Fig. 16) was removed from the arm assembly, it may be installed at this time.

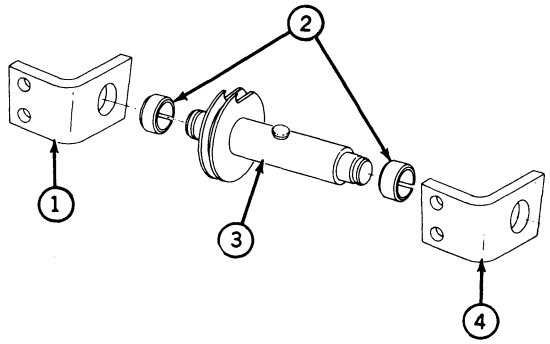

1—Left Bracket
2—Bushings
3—Weight Adjustment Pulley and Shaft
4—Right Bracket

Fig. 22-Weight Adjustment Pulley Assembly

Press bushings (2, Fig. 22) into brackets (1 and 4) and install pulley shaft (3). Make sure that pulley is adjacent to the left-hand bracket.

NOTE: Bushings are self-lubricating, and therefore do not require any lubricant.

Mount weight adjustment pulley assembly on arm assembly. Rotate pulley and observe if it turns freely in bushings. If binding occurs, disassemble parts, and reassemble before proceeding with the installation.

Assemble suspension arm and link assemblies to support, using Fig. 23 to aid installation. Assemble suspension frame to link assembly. Leave arm assembly disconnected from suspension frame until shock absorber has been installed (see Fig. 18).

Install shaft links (Fig. 18) on arm assembly pins. Place looped ends of lower cable in outside grooves of shock absorber shaft.

Position shock absorber shaft in links with cable ends secured between link and shaft shoulder (Fig. 17). Raise rear end of suspension frame, and place shock absorber upper mounting ring in frame. Fasten arm assembly to suspension frame.

Install upper pulley in clevis and position upper cable on weight adjustment pulley (Fig. 16). Position lower cable over pin on pulley shaft.

Position weight adjustment yoke (Fig. 15) in suspension support. Slide the washer (34, Fig. 23) on screw up against ratchet lever and connect weight adjustment screw with ratchet lever to yoke. Install spring pin on end of screw.

The ratchet lever should move back and forth with only a light drag. Loosen or tighten the self-locking cap screw to achieve the desired lever movement.

Position weight adjustment yoke tab at the extreme left-hand end of slot (100 lb. scale reading). Insert threaded end of upper cable into yoke, and tighten cable as tight was it will go. Tighten lock nuts.

Place rollers with their respective shims on the roller shafts. Mount the seat support assembly on suspension assembly and install rail brace (Fig. 11), or stops.

Check the rail-to-roller side play clearance to provide free rolling of seat support assembly throughout the full range of travel. Clearance should measure 0.005-0.030 in. (0.13-0.76 mm). Add or subtract shims between rollers and roller shafts. Shims are available in 0.010 and 0.020 in. (0.254 and 0.508 mm) sizes.

Install seat with swivel on the seat support (page 20-2), and mount in body.

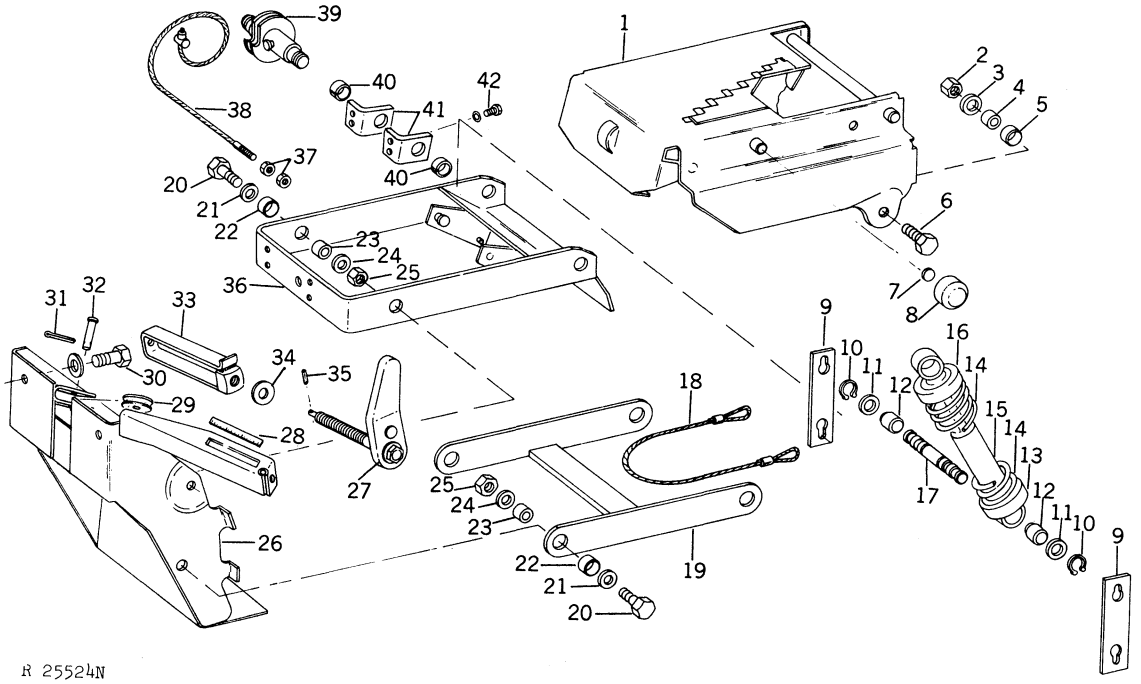

1—Suspension Frame
2—Lock Nut
3—Special Washer
4—Race
5—Bushing
6—Cap Screw
7—Shim
8—Roller
9—Shaft Link
10—Retaining Ring
11—Special Washer
12—Bushing
13—Lower Cap
14—Spring
15—Shock Absorber
16—Upper Cap
17—Shaft
18—Wire Cable
19—Suspension Link
20—Cap Screw
21—Special Washer
22—Bushing
23—Race
24—Special Washer
25—Special Lock Nut
26—Suspension Support
27—Weight Adjustment Screw with Ratchet
28—Weight Indicator Label
29—Pulley
30—Cap Screw and Washer
31—Cotter Pin
32—Headed Pin
33—Weight Adjustment Yoke
34—Special Washer
35—Spring Pin
36—Suspension Arm
37—Nut
38—Wire Cable
39—Pulley with Shaft
40—Bushing
41—Bracket
42—Cap Screw and Lock Washer

Fig. 23-Exploded View of Suspension Assembly

Group 25
MISCELLANEOUS COMPONENTS

SOUND-GARD BODY FRAME

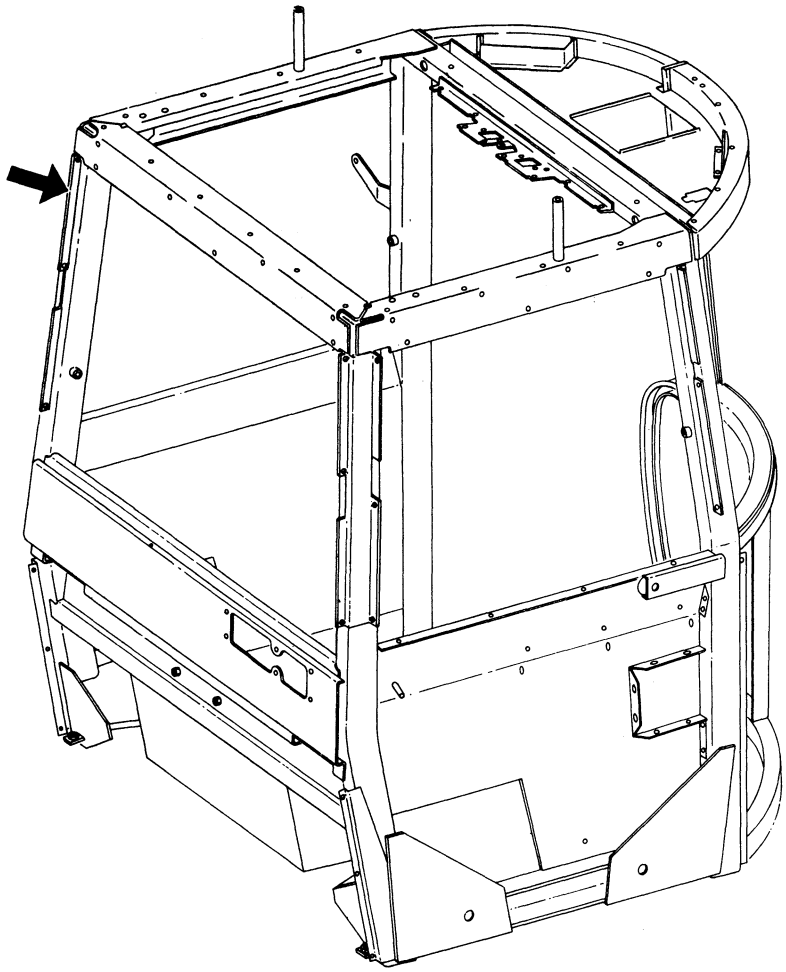

Fig. 1-Sound-Gard Body Frame

GENERAL INFORMATION

The Sound-Gard Body frame (Fig. 1) is basically a 4-post Roll-Gard with additional members welded to it, forming an integral operator enclosure framework.

Not only does the body frame form a base for mounting the air conditioning, heating, and other comfort components, but it also has a primary function of providing roll-over protection for the operator.

For information on removing the Sound-Gard Body from the tractor, see Group 5 of this section.

REPAIR

CAUTION: A tractor roll-over may place a severe stress on the Roll-Gard structure. Therefore, reuse of the Sound-Gard Body is not recommended if its structural members have been bent, buckled, or stretched.

When making a repair on the body frame, no welding of any type should be done directly on the Roll-Gard structural members with the one exception of welding on new door hinges. Doing so, may weaken the members sufficiently to limit their effectiveness in protecting the operator if a rollover or upset should occur.

Follow the instructions outlined in the Direction which is supplied with the replacement door hinges for fastening hinge to the body frame.

Litho in U.S.A.

BODY DOOR AND EXTERIOR PANELS

DOOR AND DOOR PANEL

General Information

A door and door panel are used on the Sound-Gard Body; the door for the usual entry and exit, the door panel for service.

The door (Fig. 2) swings on two (three on late models) large hinges, having one-half of the hinge welded to the body center post, and the other half welded to the door frame. A door latch and a door stop assembly are mounted on the center section of the door frame. The left-hand electric windshield wiper motor is mounted on the upper door frame.

The door panel is a stationary panel that may be removed to satisfy service requirements.

Removal

Door

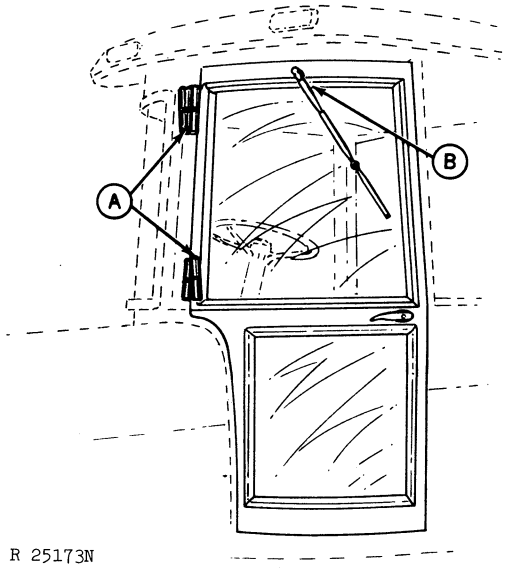

A—Hinge Pins **B—Wiper Motor**

Fig. 2-Door (Early Model)

Disconnect wiring from wiper motor (B, Fig. 2). See Section 40, Group 25.

Disconnect pin from door stop bar.

Drive spring pins out of door hinge pins (A), and remove hinge pins. Carefully remove door from body.

On later models there are plastic bushings which may also have to be removed.

Door Stop

Also referring to Fig. 6, disconnect pin (25) which fastens the door stop bar (27) to the bracket on body center post. Disconnect door stop (18) from door frame. Remove spacer (19) from door stop latch (20). Fig. 3 shows the door stop (A) removed from the door.

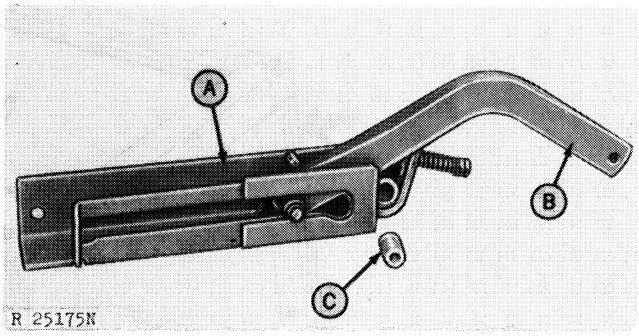

A—Door Stop **C—Spacer**
B—Bar

Fig. 3-Door Stop

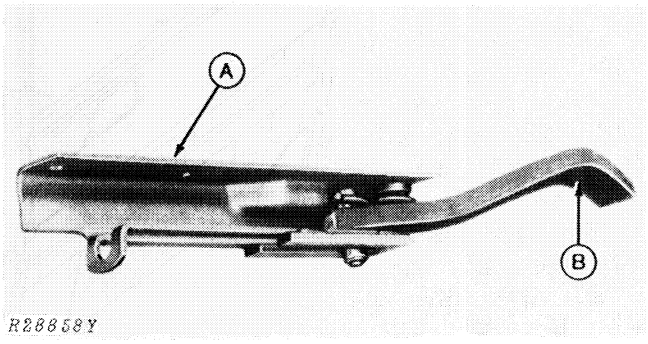

A—Door Stop **B—Bar**

Fig. 4-Door Stop (Late Model)

Door Handle and Latch

Refer to Fig. 7 and remove the two screws which secure the outer door handle (1 or 2), and spacer (3) to the door. Pull out handle assembly.

On early models disconnect the inner door handle. Remove the door latch cover and disconnect door latch housing (6).

Fig. 5 shows both assemblies removed from an early model. Fig. 6 shows both assemblies from a later model.

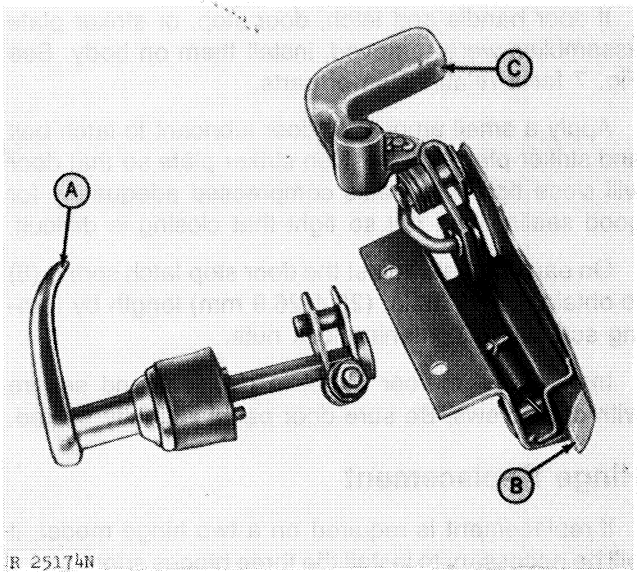

A—Outer Door Handle **C—Inner Door Handle**
B—Latch

Fig. 5-Door Handle and Latch (Early model)

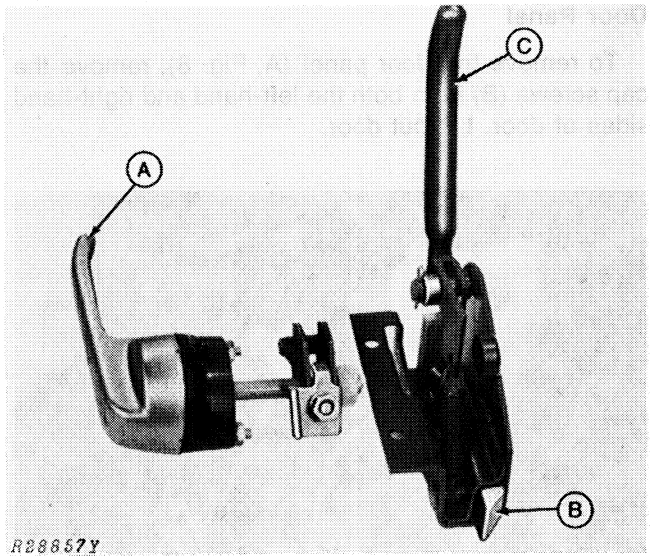

A—Outer Door Handle **C—Inner Door Handle**
B—Latch

Fig. 6-Door Handle and Latch (Later model)

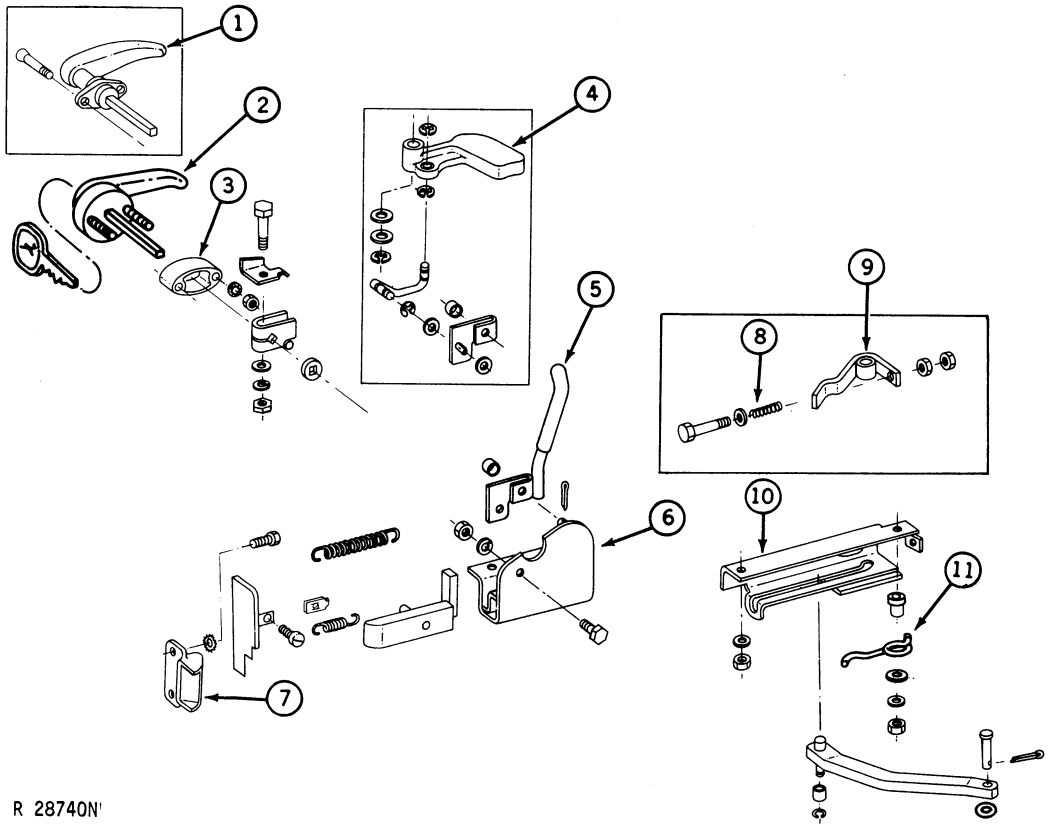

***1—Outer Door Handle**
****2—Outer Door Handle**
3—Spacer
***4—Inner Door Handle Assembly**
****5—Inner Door Handle Assembly**
6—Door Latch Housing
7—Striker Plate
***8—Spring**
***9—Door Stop Latch**
10—Door Stop
****11—Door Stop Spring**
***—Early model**
****—Later model**

Fig. 7-Exploded View of Door Handle, Latch, and Door Stop Assemblies

Door Panel

To remove the door panel (A, Fig. 8), remove the cap screws (B) from both the left-hand and right-hand sides of door. Lift out door.

A—Door Panel **B—Cap Screws**

Fig. 8-Door Panel

Repair

Usually, only very limited door repairs will be required. A thorough visual inspection should first be made of the overall condition, observing door for cracks, heavy corrosion, or other defects which would weaken the structure.

Cracks may be repaired by welding when desirable to do so. If doors have been sprung to a degree that they will not seal tight enough to prevent air leaks, replacement is necessary.

Inspect the rubber seals around the door frames. If the rubber seals are deteriorated or torn, replace with new ones. After removing the old seals, clean the surface adequately, and install new seals using AR49923 Rubber Adhesive.

The door handle, latch and striker plate, and door stop assemblies should be cleaned and inspected for wear. Parts that are worn beyond satisfactory operating limits should be repaired or replaced.

Installation

Lightly lubricate the hinge pins and install door on body. On later models install plastic bushings. Install retaining spring pins. Check door opening and closing to make sure it swings freely.

If door handle and latch, door stop, or striker plate assemblies were removed, install them on body. See Fig. 7 for a relationship of parts.

Apply a small amount of door lubricant to latch bolt and striker plate (7). Position striker plate so that door will close tight with seals compressed adequately for good sealing, but not so tight that closing is difficult.

On early models adjust the door stop latch spring (8) to obtain 1.00-1.06 in. (25.4-26.9 mm) length by turning screw and tightening lock nuts.

Install service door panel in position, and secure with cap screws. Be sure door panel is tightly sealed.

Hinge Replacement

If replacement is required on a two hinge model, it will be necessary to install the three hinges supplied for parts. To properly mount the hinges the following fixtures must be used;

JDG 20-1 Upper Fixture
JDG 20-2 Lower Fixture
JDG 20-3 Hinge Fixture

CAUTION: Have a fire extinguisher available at all times while working on hinges.

Replacing the Upper or Center Hinge

1. Remove both right-hand and left-hand wiper arms with blades.

2. Remove left-hand wiper motor from door.

3. Remove upper window glass and moldings from door and save. Also remove upper right-hand windshield glass with molding and save.

4. Remove door from Sound-Gard Body by removing hinge pins and remove pin from door stop (Fig. 3).

5. Use a parting wheel to cut off old welds and hinges from door post and door.

6. Use a pencil grinder or body sander to clean up area where welds were cut off.

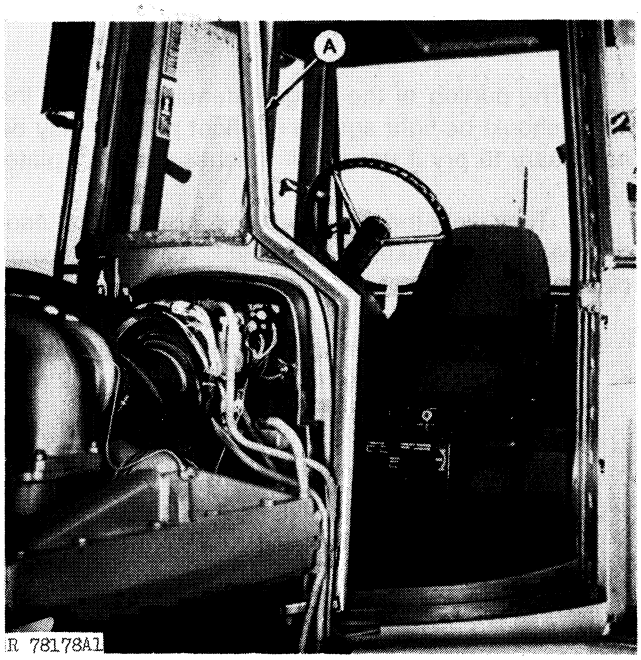

A—JDG 20-1 Upper Fixture

Fig. 9-Replacing Door Hinge

IMPORTANT: Use asbestos sheets to protect paint and interior from parting wheel grinder sparks.

7. Mount the JDG 20-1 fixture to the remaining hinges using the hinge pins.

8. Position the hinge half on the fixture using a hinge pin.

9. Clamp the hinge to the center door post and weld the rear edge of the hinge to the door post.

NOTE: Do not weld across the top of the hinge.

10. Weld the seam between the front of the center post and the flat part of the hinge.

11. Remove the hinge fixture and install the other half of the hinge.

12. Position the door in place by installing the hinge pins in the remaining hinges.

13. Clamp the door to the center post.

14. Weld the upper portion of the hinge to the door.

15. Open the door and weld the rear portion of the hinge to the door.

16. Clean up all areas and touch-up paint.

17. Install window moldings, windows, left-hand wiper motor and wiper arms.

Replacing Lower Hinge

1. Remove lower window glass, and moldings from door and save.

2. Remove door from Sound-Gard Body by removing hinge pins and remove pin from door stop (Fig. 3).

3. Use a parting wheel to cut off old welds and hinges from door, door jamb and floor.

4. Use a pencil grinder or body sander to clean up area where welds were cut off.

5. Install the lower hinge half on the JDG 20-2 Lower Fixture and use a straightedge to check for proper alignment of hinge pin bushing.

6. Position the JDG 20-2 fixture with hinge attached so the fixture channel is flat against the bulkhead door jamb and the rear pin is resting on the door step (Fig. 8).

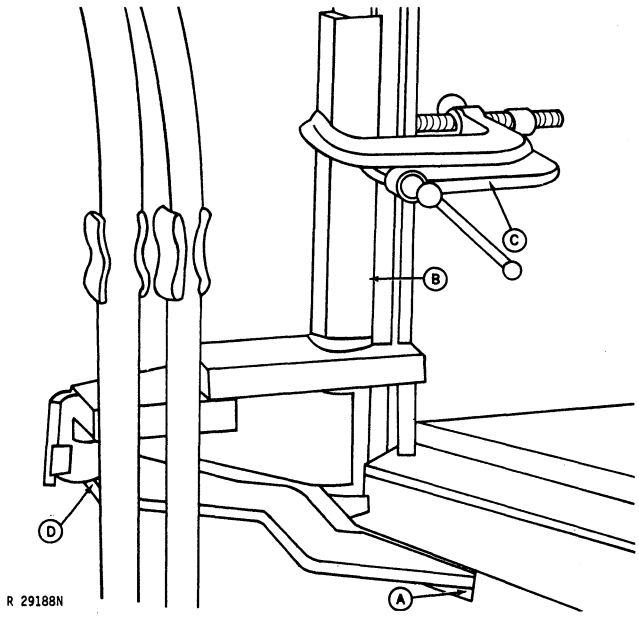

A—Notch
B—Fixture
C—Clamp
D—Hinge

Fig. 10-Lower Hinge and Fixture

Hinge Replacement—Continued

7. The portion of the hinge extending through the notch should be tight against the floor plate. It may be necessary to pry it up until it touches the floor plate.

8. Remove the JDG 20-2 fixture and install the JDG 20-1 fixture to the upper two hinges.

9. Position the door in place by installing the hinge pins in the upper and center hinges.

10. Clamp the upper half of the bottom hinge to the door.

11. Weld the upper portion of the bottom hinge to the door.

12. Finish welding the lower hinge to the door jamb and floor plate.

13. Clean up all areas and touch-up paint.

14. Install lower window glass and moldings.

Replacing All Three Hinges or Door

1. Remove both right-hand and left-hand wiper arms with blades.

2. Remove left-hand wiper motor from door.

3. Remove upper window glass and moldings from door and save. Also remove upper right-hand windshield glass with molding and save.

4. Remove door from Sound-Gard Body by removing hinge pins and remove pin from door stop (Fig. 3).

5. Use a parting wheel to cut off old welds and hinges from door post and door.

6. Use a pencil grinder or body sander to clean up area where welds were cut off.

7. Install the lower hinge half on the JDG 20-2 Lower Fixture and use a straightedge to check for proper alignment of hinge pin bushing.

8. Position the JDG 20-2 fixture with hinge attached so the fixture channel is flat against the bulkhead door jamb and the rear pin is resting on the door step (Fig. 10).

9. The portion of the hinge extending through the notch should be tight against the floor plate. It may be necessary to pry it up until it touches the floor plate.

10. Tack weld the hinge to the door jamb and floor and remove the fixture and check for the following clearances:

8430 - Top the lower hinge bushing to underside of the intercooler must be 2-1/16 in. (52 mm) plus or minus 1/8 in. (3 mm).

- Centerline of the lower end of bushing to the engine block must be 5-1/8 in. (130 mm) plus or minus 1/8 in. (3 mm).

8630 - Delco Starter: Minimum clearance between the lower hinge stop and the starter solenoid housing must be 3/8 in. (10 mm).

- John Deere Starter: Minimum clearance between the lower hinge stop and starter solenoid housing must be 3/4 in. (19 mm).

- Centerline of the lower end of the bushing to the engine block must be 4-5/8 in. (117 mm) plus or minus 1/8 in. (3 mm).

11. If the above clearances are okay, remove JDG 20-2 fixture and install the JDG 20-1 fixture to the lower hinge using a hinge pin.

12. Install the lower half of the top hinge (A, Fig. 11) to the top arm of the JDG 20-1 Fixture using a hinge pin.

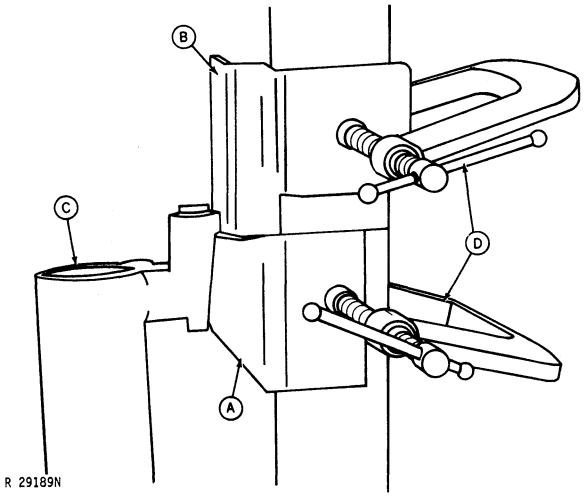

A—Hinge B—Hinge Fixture C—Upper Fixture D—Clamps

Fig. 11-Upper Hinge

13. Use JDG 20-3 Hinge Fixture (B) to position the bushing centerline the correct distance from the center post.

14. Clamp the hinge to the center door post with a C-clamp (D). Be sure the flat part of the hinge is parallel to the tractor centerline.

15. Install the lower half of the center hinge (A) to the center arm of the JDG 20-1 fixture.

16. Clamp the center hinge to the center post. Be sure the flat part of the hinge is parallel to the tractor centerline.

17. Finish welding the lower hinge to door jamb and floor plate.

18. Weld the rear edge of the center and upper hinge halves to the center post.

19. Weld the seam between the front of the center post and the flat part of the top two hinges.

20. Remove the hinge fixtures and install the other half of the hinges using the hinge pins.

21. Position the door in place with 1/8 in. (3 mm) spacer between the bottom of the door and the bottom plate.

22. Clamp the door to the lower hinge and the center post.

23. Make the following checks to see how the door fits in the opening:

a. The door should align to the strap of the bottom hinge so that the clamp can hold it in place for welding.

b. The crack between the bulkhead and door should be 5/16 to 1/2 in. (8 to 13 mm).

c. The crack between the door and Sound-Gard Body at the latch should be approximately 5/16 in. (8 mm). If necessary, the door striker may be moved to obtain the 5/16 in. (8 mm) along this side of the door.

24. When the door is in position, weld the upper portion of the top and center hinge to the door.

25. Weld the upper portion of the bottom hinge to the door.

26. Open the door and weld the rear end of the top and center hinge to the door.

27. Clean up all areas and touch-up paint.

28. Install window moldings, windows, left-hand wiper motor and wiper arms.

EXTERIOR PANELS

General Information

Covering the exterior of the body frame are three side panels (left side, right side, and rear), and two roof panels (inner and outer). Both left- and right-side panels and both roof panels enclose the air conditioning, heating, pressurizing, and lighting equipment. The rear panel serves as a base for mounting the tail lights and SMV emblem.

Side Panels

Removal

The rear panel and tractor mounting handle (one through each side panel) must be removed before either the left-hand or right-hand side panels can be removed.

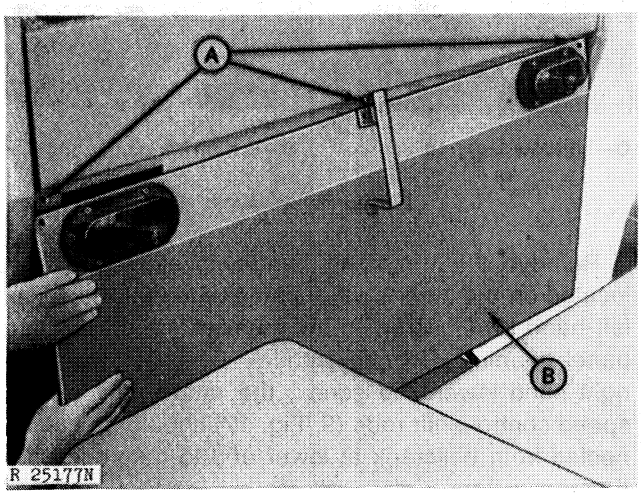

A—Retaining Screw Locations **B—Rear Panel**

Fig. 12-Removing Rear Panel (Late Model Illustrated)

Side Panels—Continued

Remove the rear panel (B, Fig. 12). On early models, remove the SMV emblem and remove the five retaining screws from the top edge of panel. Note that there are two screws in each tail light and one screw in the SMV bracket. On late models, remove the SMV emblem and remove three retaining screws (A) from top edge of panel.

On all models, loosen the panel retaining screws at the left and right bottom corners. Carefully pull panel away from body far enough to disconnect the wiring lead for each tail light, and remove panel.

To remove the mounting handle from either side panel, remove the button plugs (D, Fig. 13) from window molding (C), and remove sheet metal screws (four on each side). These screws fasten the top edge of side panel and window molding to the body. Lift out the window molding.

Carefully pull back the upholstery pad (F, Fig. 14) to expose the mounting handle upper cap screw (E). Remove screw.

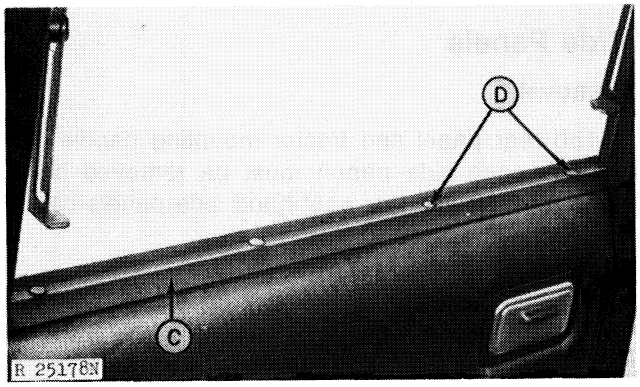

C—Window Molding **D—Button Plugs**

Fig. 13-Button Plugs

Remove the mounting handle lower cap screws located on the inner side of frame side members. The left-hand lower screw is accessible through the floor panel opening. On early models when removing the right-hand lower cap screw, the range selector and speed control shift rods (9, Fig. 17) should be disconnected from bellcrank at lower end to gain access to the screw from underneath above the fuel tank. Pull handle out of panel grommets.

With the rear panel removed, the 4 sheet metal screws which fasten the rear edge of the side panel to the body (at rear edge of upright posts), can be taken out.

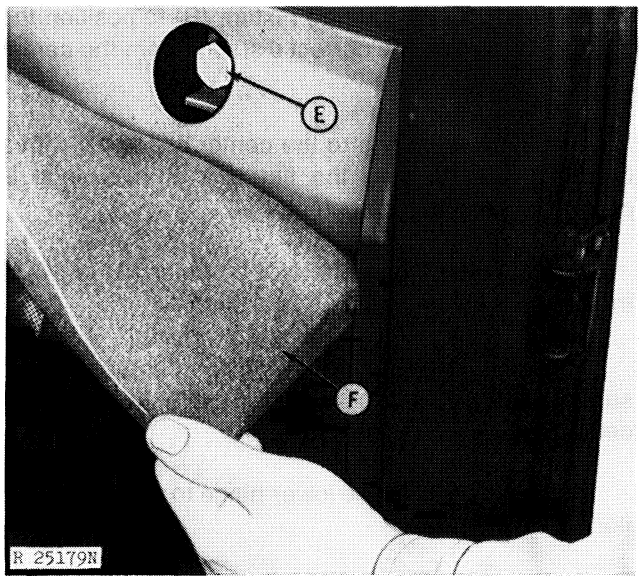

E—Cap Screw **F—Upholstery Pad**

Fig. 14-Mounting Handle Upper Cap Screw (Left-Hand Side Illustrated)

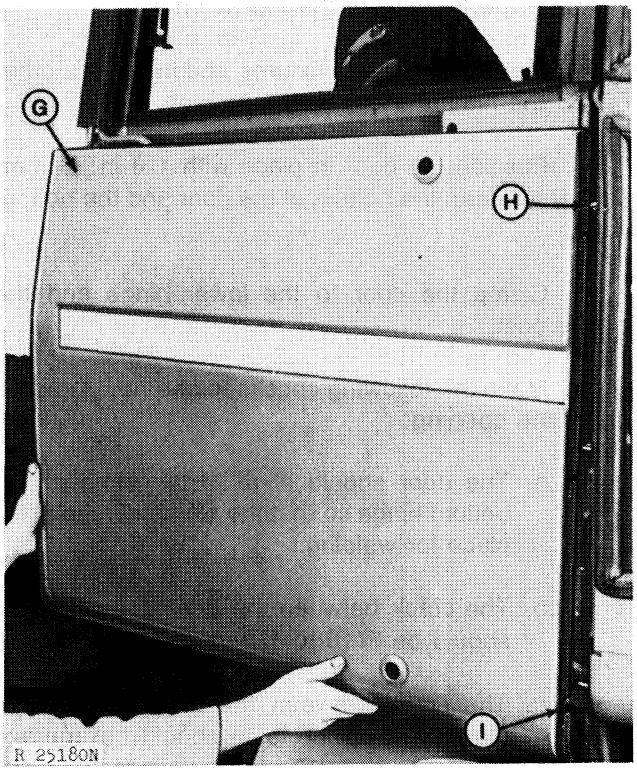

G—Side Panel **I—Slot**
H—Hook

Fig. 15-Removing Side Panel (Right-Hand Side Illustrated)

To remove the side panel (G, Fig. 15), lower the panel just enough to allow the three slots (I) in the leading edge of panel to disengage from hooks (H) on body. Lift off panel.

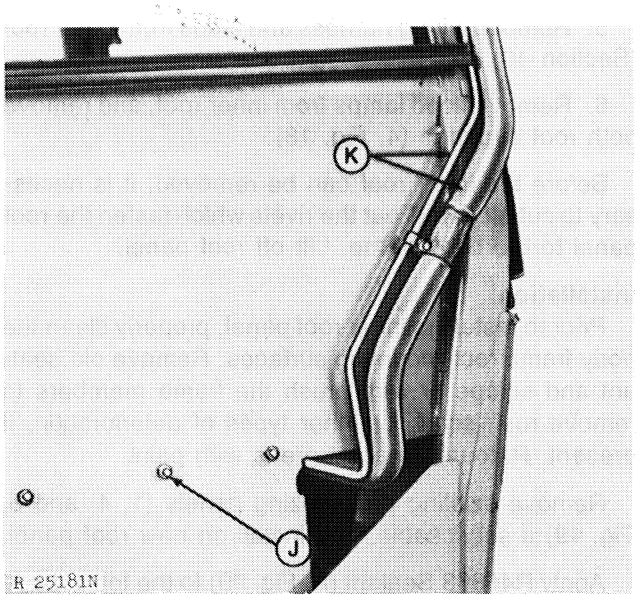

J—Storage Box Hinge Support Screws

K—Air Conditioning Pressure and Return Lines

Fig. 16-Left-Hand Side of Body (Panel Removed)

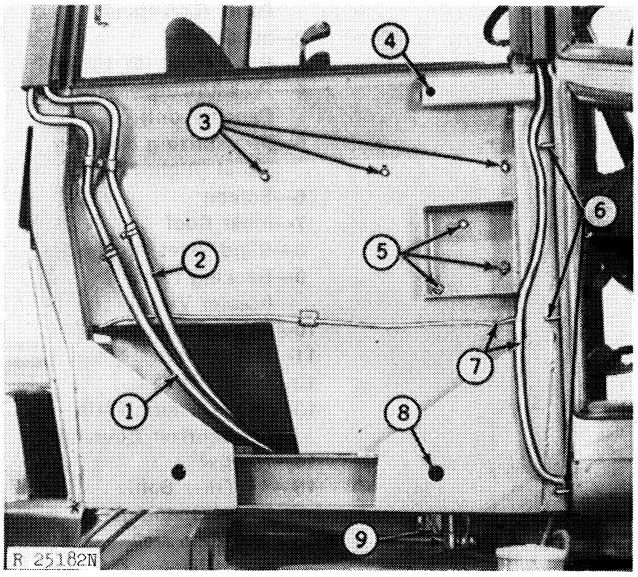

1—Heater Supply Hose
2—Heater Return Hose
3—Control Console Cover Screws
4—Mounting Handle Upper Cap Screw Hole
5—Control Lever Mounting Bracket Screws
6—Side Panel Retaining Hooks
7—Body Wiring Harness
8—Mounting Handle Lower Cap Screw Hole
9—Range and Speed Control Shift Rods (Early Models)

Fig. 17-Right-Hand Side of Body (Panel Removed)

Fig. 16 and 17 illustrate what is seen fastened to sides of body when the side panels are removed.

Installation

Check side panel to make sure all spring nuts are in place to receive the sheet metal screws.

Engage front edge of side panel into its respective hooks, and secure rear edge with screws.

Insert mounting handles into side panel rubber grommets with long "leg" of handle at bottom, and install cap screws.

Smooth out upholstery pad and fasten down with AR49923 Adhesive. Install window molding in place so that lip of molding covers the top edge of upholstery pad.

Insert sheet metal screws into window molding holes to fasten the upper edge of side panel and window molding to the body. Cover holes with button plugs.

Place rear panel in position to install taillight wiring. Fasten panel to body and install SMV emblem.

Roof Panels

Removal

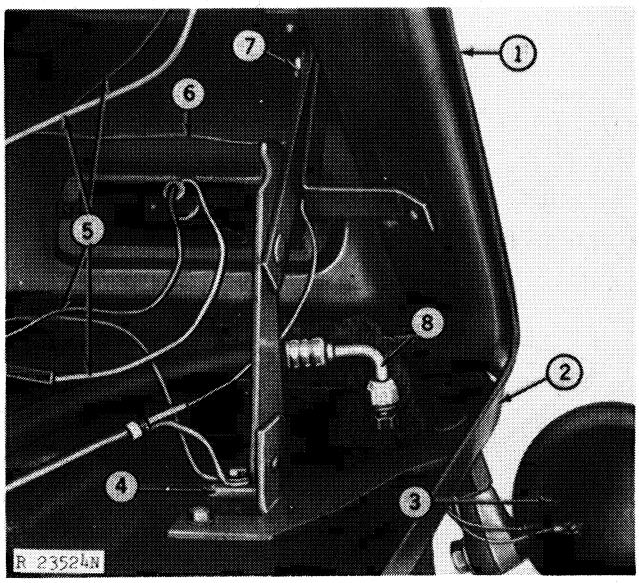

1—Outer Roof
2—Inner Roof
3—Flood Lamp
4—Roof Support
5—Wiring Leads
6—Radio Antenna
7—Attaching Screw
8—Air Conditioning Lines

Fig. 18-Removing Roof Panels

Roof Panels—Continued

Disconnect the battery ground cable. Open the outer roof to gain access to parts that require disconnecting. See Fig. 18.

Disconnect front and rear flashing warning lamp wiring leads (5), radio antenna lead (6), and disconnect ground wire leads from roof support (4).

Remove the roof support-to-outer roof bracket attaching screw (7). Lift off outer roof.

After removing the outer roof, use the following procedure to remove the inner roof:

1. Remove body air filter. Remove the right-hand windshield wiper motor, radio, and speakers (Section 40, Group 25).

2. Remove the headlining from inside the body (Fig. 22). Disconnect the evaporator condensate drain tray hoses (Group 10, Fig. 55).

3. Drain the cooling system. Remove the heater core, heater valve, and hoses (Group 15).

4. Discharge the air conditioning system, if equipped (page 10-30). Remove the air conditioning lines, evaporator, and pressurizer blowers (Group 10).

5. Remove wiring harness and leads from inner roof (Section 40).

6. Remove flood lamps from inner roof, and remove both roof supports (4, Fig. 18).

Before the inner roof can be removed, it is necessary to cut off or drill out the rivets which fasten the roof panel to the body frame. Lift off roof panel.

Installation

Prior to installing inner roof panel, properly clean the body frame roof mounting surfaces. Remove old sealant and scrape or wire brush the frame members to remove rust, scale, or other types of deterioration, if present. Retouch cleaned areas with paint.

Remove existing pressurizing panels (1, 4, and 5, Fig. 19) if serviceable, and install on new roof panel.

Apply R46663 Sealant (A, Fig. 20) to the top of body frame in a band or strip as shown in illustration. Sealant should be placed in the approximate center of the frame members. Apply liberal amounts at 0.22 in. (5.59 mm) step (B) located at the extreme front, and to a circular area adjacent to the roof support spacers (C).

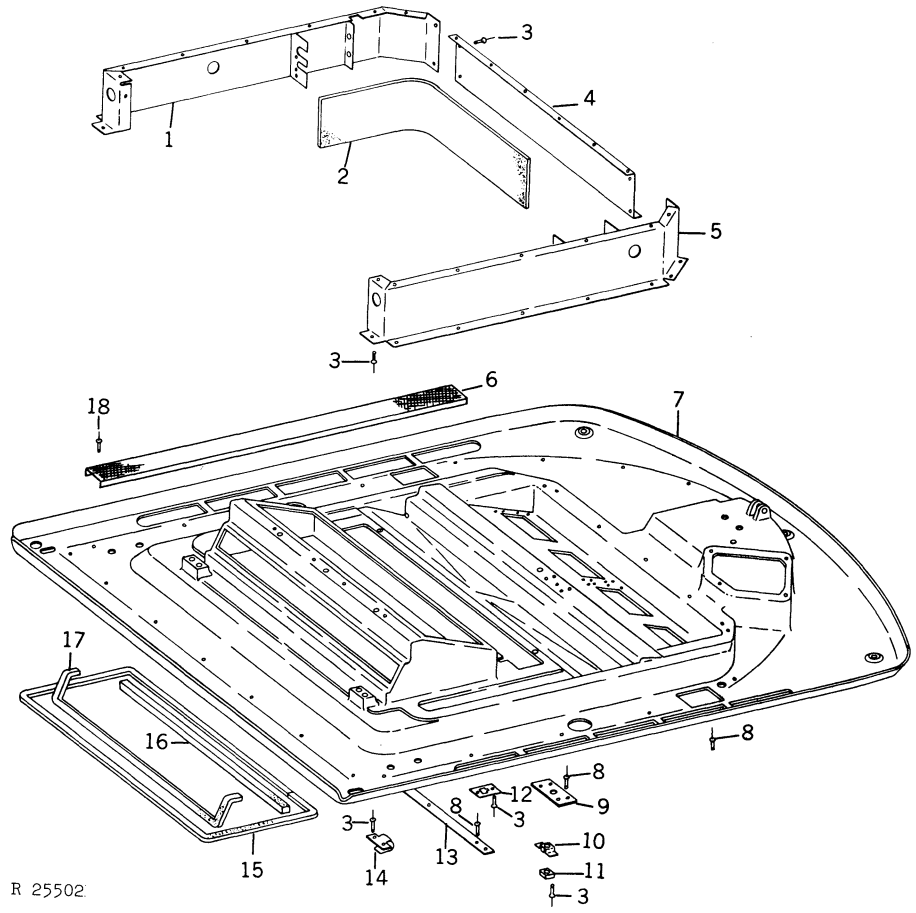

1—Pressurizing Housing Panel (Left-Hand)
2—Insulation
3—Blind Rivet (57 Used)
4—Pressurizing Housing Panel (Front)
5—Pressurizing Housing Panel (Right-Hand)
6—Screen
7—Inner Roof
8—Blind Rivet (15 Used)
9—Backing Plate (Heater Valve)
10—Nut Retainer
11—Square Nut
12—Wear Plate
13—Rear Backing Plate (Pressurizer Housing)
14—Hanger
15—Air Filter Baffle (Door Opening)
16—Air Filter Well Baffle (Upper Rear)
17—Air Filter Well Baffle (Rear)
18—Blind Rivet

Fig. 19-Inner Roof Component Parts

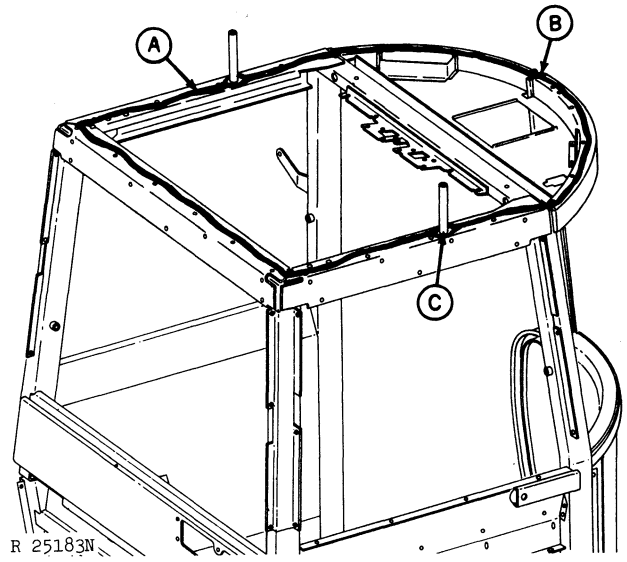

A—R46663 Sealant **B—Step** **C—Spacer**

Fig. 20-Location of Sealant

Position inner roof panel on body frame and rivet panel to frame.

Install air conditioning lines and evaporator, and pressurizer blowers. See Group 10 of this section.

Connect evaporator drain tray hoses (Group 10, Fig. 55).

Install heater core and heater valve. Connect the supply hose (white stripe) to connection at lower right rear corner of heater core. See page 15-3 and 15-4.

Install roof supports and position wiring harness.

Fasten the outer roof on the roof supports (Fig. 18 and 21). Be sure to use spacer (23, Fig. 21) when attaching outer roof. Tighten screw (7, Fig. 18) securely. Install roof support rod (7, Fig. 21).

Install headliner (see page 25-15) and control bezel. Mount radio and speakers, securing antenna to outer roof with tape (6, Fig. 18).

Install right-hand wiper motor and cover plate (10, Fig. 21).

1—Blind Rivet
2—Roof and Brackets
3—Front Bracket
4—Spring
5—Machine Screw
6—Spring Pin
7—Roof Support Rod
8—Cotter Pin
9—Tapping Screw
10—Wiper Motor Cover
11—Spring Nut
12—Tapping Screw
13—Lock Washer
14—Insulation
15—Cover-To-Evaporator Seal
16—Cover Side Seal
17—Insulation
18—Rear Cover Seal
19—Pressurizer Housing Cover
20—Roof Support (Right-Hand)
21—Nut and Lock Washer
22—Special Washer
23—Spacer
24—Rear Pivot Bracket
25—Cap Screw
26—Cap Screw and Lock Washer
27—Roof Support (Left-Hand)

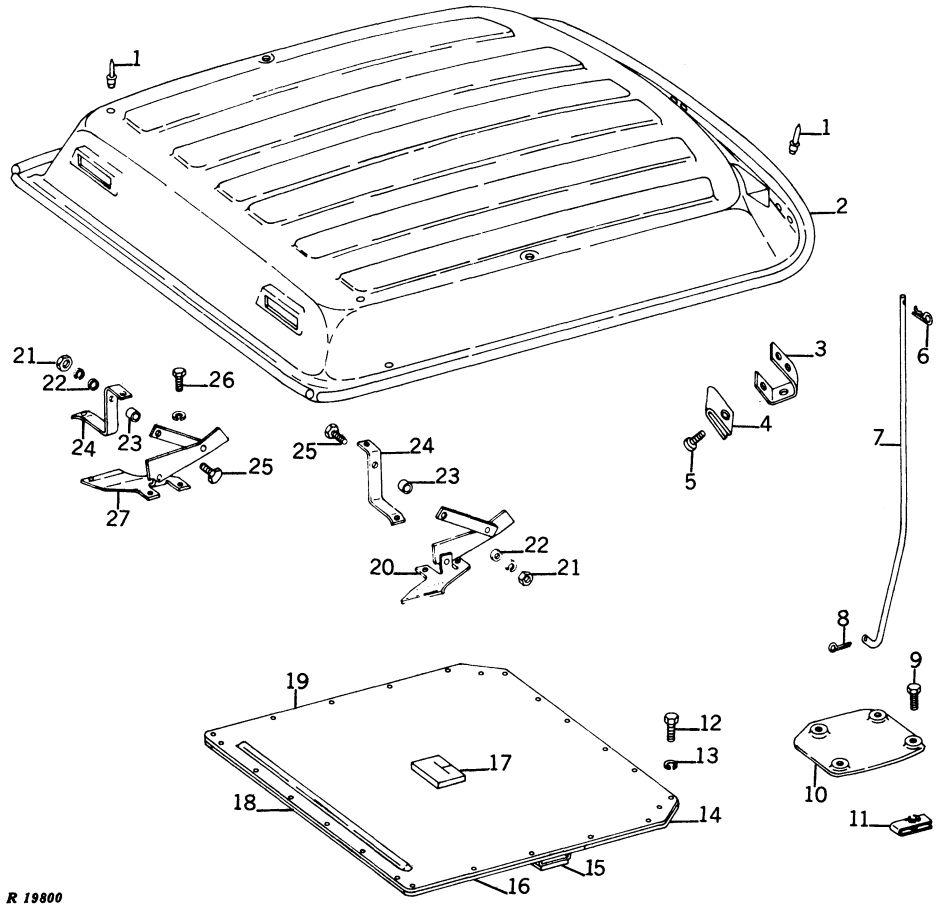

Fig. 21-Outer Roof Component Parts

Installation—Continued

Connect wiring leads to all lamps. Connect ground wires to roof supports (4, Fig. 18).

Charge the air conditioning system. See page 10-33. Then check system for refrigerant leaks (page 10-34).

Fill cooling system to proper level. Be sure all air has bled from system (page 15-4). Check for leaks.

Install housing cover (19, Fig. 21). Tighten all tapping screws adequately to seal pressurizer compartment. Install air filter and filter door in roof.

Make an overall inspection of the installation to observe if all connections have been made and are tight. When satisfied that the installation is complete, close the outer roof and fasten to inner roof.

GLASS AND ATTACHING HARDWARE; MOLDINGS AND SEALS

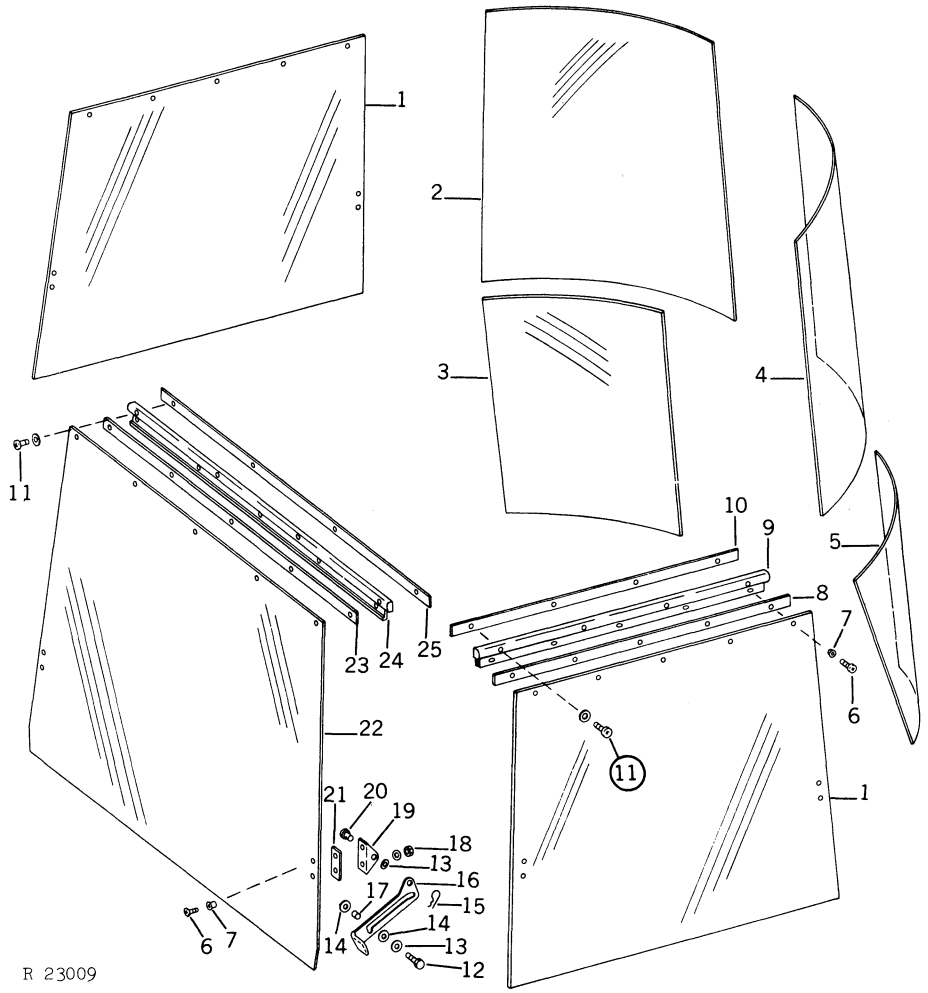

1—Side Window
2—Upper Door Window
3—Lower Door Window
4—Upper Right-Hand Front Window
5—Lower Right-Hand Front Window
6—Machine Screw (27 Used)
7—Bushing (27 Used)
8—Bolting Strap
9—Side Window Upper Molding
10—Side Window Molding Strap
11—Machine Screw With Lock Washer
12—Special Screw
13—Spring Washer
14—Washer
15—Quik-Lock Pin
16—Window Latch
17—Sleeve
18—Nut and Lock Washer
19—Window Latch Bracket
20—Headed Pin
21—Gasket
22—Rear Window
23—Bolting Strap
24—Rear Window Upper Molding
25—Rear Window Molding Strap

Fig. 22-Glass and Attaching Hardware

GENERAL INFORMATION

All glass used in the Sound-Gard Body is a tempered safety plate type glass, which has been tinted to reduce glare. Both curved and flat glass is used.

The curved glass (Fig. 22) at the front of body is retained with special rubber moldings. These moldings have two interlocking lips that hold the glass in place.

Side and rear windows use flat glass which is hinged at the top so that the window can be opened when desired. Window latches (16, Fig. 22) are used to hold the window closed against rubber seals, or permit it to open within limits of the latch slot.

CAUTION: Always use care when handling glass to prevent personal injury.

REMOVAL

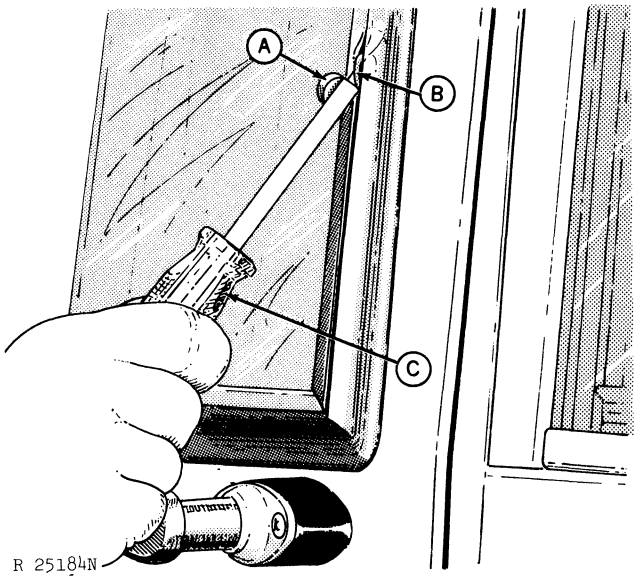

A—Roller **B—Molding Lip** **C—JDST-29 Tool**

Fig. 23-Positioning Molding Lips for Curved Glass Removal

To remove the curved glass from its molding, insert prong of JDST-29 Tool (C, Fig. 23) into seam of molding and pry out the inner lip (B). Position roller (A) of tool on the side of seam toward the glass, and push the tool to unlock the lips.

Press in on glass to keep it in place, and pry glass out of molding at one of the corners. Grasp the glass firmly with both hands and remove from body.

To remove the side and rear windows, disconnect the window latch (16, Fig. 22) from the latch bracket (19). Remove the machine screws (6) and bushings (7). Carefully remove glass.

INSTALLATION

Before installing glass, check moldings and seals for their general condition. Replace if torn or deteriorated.

When replacing seals, thoroughly remove traces of old seal from metal trim. Install new seals using AR49923 Adhesive. Cut off excess seal material.

Install curved glass moldings with the two interlocking lips toward the outside of body. Press moldings into place, and make sure that the ends fit tightly together.

Lubricate moldings with a liquid soap to help make installation of glass easier. Install glass into its groove in molding, and "work" molding to help position glass.

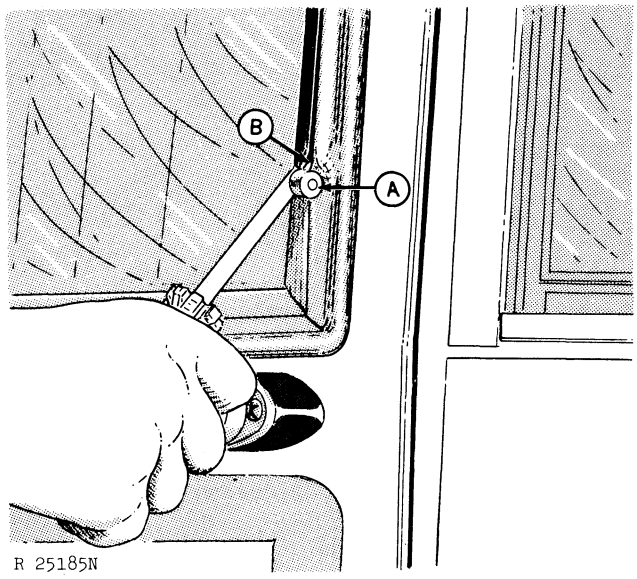

A—Roller **B—Molding Lip**

Fig. 24-Positioning Molding Lips for Curved Glass Installation

Starting at one corner, interlock lips (B, Fig. 24) by using the JDST-29 Tool. Insert prong of tool into seam with roller (A) on side of seam away from the glass, and push tool to force lips into position.

Install side and rear windows to body. Insert screw (6, Fig. 22) and bushing (7) into hole of glass with the flanged end of bushing toward the head of screw. Tighten screws securely. Connect window latch (16) to latch bracket (19). Check window operation.

CONTROL SUPPORT WITH COVERS AND COWL

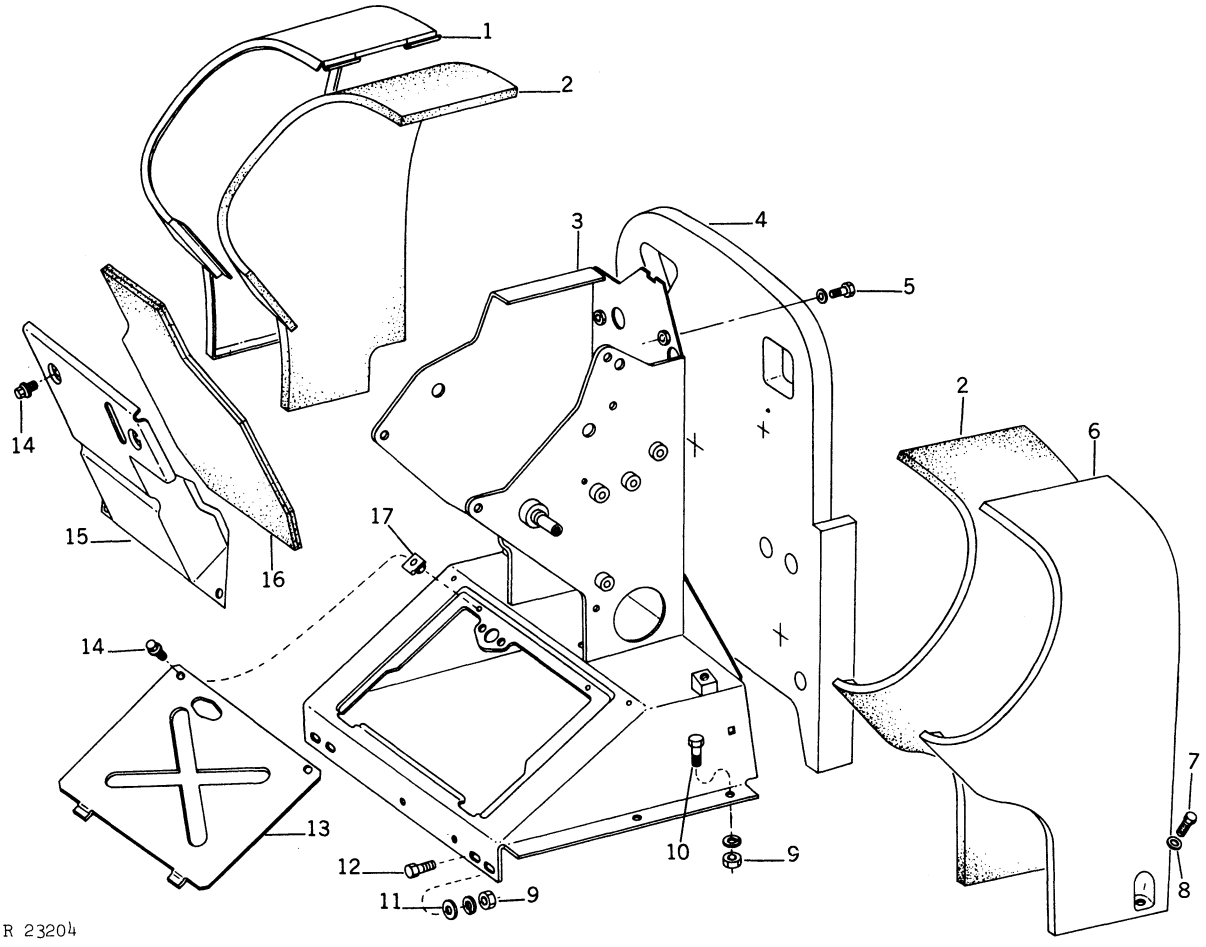

1—Left-Hand Cowl
2—Cowl Insulation
3—Control Support
4—Insulation
5—Cap Screw and Lock Washer
6—Right-Hand Cowl
7—Cap Screw
8—Washer
9—Nut and Lock Washer
10—Cap Screw
11—Washer
12—Cap Screw
13—Control Support Cover
14—Special Screw with Washer
15—Cowl Rear Cover
16—Cover Insulation
17—Nut with Clip

Fig. 25-Control Support and Related Parts

GENERAL INFORMATION

The control support is bolted to the Sound-Gard Body at the floor. While not a part of the body, it is usually removed along with the body whenever it is removed from the tractor. See Group 5 of this section for Sound-Gard Body removal information.

SERVICE

Seldom will there be a need for service on the control support itself. However, there may become a need for service of components mounted in the control support. If so, refer to the appropriate section of this manual for specific service information on these parts.

Eventually, the insulation (2, 4, and 16, Fig. 25) may require replacement. Install new insulation with adhesive only after removing all the old insulation, and properly preparing the attaching surfaces. The insulation on front of bulkhead (4) should be installed with the topskin side facing forward (away from body). Insulation is also used on inside surfaces of control support at bottom next to floor. This insulation is not shown in Fig. 25.

HEADLINER AND UPHOLSTERY

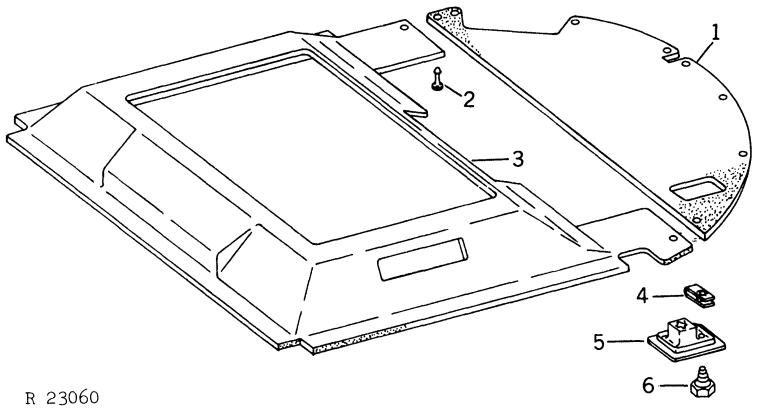

1—Front Headliner
2—Trim Stud (10 used)
3—Rear Headliner
4—Spring Nut
5—Lamp Housing
6—Tapping Screw

Fig. 26-Headliner

REMOVAL

The headliner is made in two pieces; a front section and a rear section. It is held in place with moldings, bezels, and trim studs.

To remove the front headliner, remove the radio and remove the air outlet bezel. Take out the trim studs (2, Fig. 26), and remove the front headliner.

The rear headliner may be removed after taking off the retaining moldings from sides and rear; removing the air filter door; and removing the two trim studs at front. The air outlet bezel also has to be removed if the front headliner was not taken off.

Upholstery pads are removed by pulling them loose from the body panels when the retaining moldings have been removed.

INSTALLATION

Mount dome lamp and dome lamp support on rear headliner before installing on roof. Headliner installation is done in reverse order of removal.

Make sure all body panels are clean and free of foreign material before installing upholstery pads. Bond pads to body panels with AR49923 Adhesive. Smooth out pads and install retaining moldings.

RADIO, TAPE PLAYER, AND WINDSHIELD WIPER MOTORS

For service information on these components, refer to Section 40 in this manual.

Litho in U.S.A.

Group 30
SPECIFICATIONS AND SPECIAL TOOLS

SPECIFICATIONS

Separation

Item	Specification
Sound-Gard Body Mounts	100 ft-lbs (136 Nm) torque

Air Conditioning System

Item	Specification
Evacuating System (sea level)	29-29.5 in. (1 bar) vacuum
Refrigerant capacity	3-1/2 lb. (1.59 kg) Refrigerant-12
Compressor	
Hub and drive plate assembly	0.0002-0.0007 in. (0.005-0.018 mm) press fit to shaft
Plate assembly to pulley clearance	.022-.057 in. (0.559-1.45 mm)
Mainshaft assembly end play	0.0003-0.0013 in. (0.008-0.033 mm)
Oil charge (new or rebuilt)	11 fluid oz. (312 ml) Frigidaire 525 oil
Pulley diameter	Approx. 5-5/8 in. (142.8 mm)
Discharge pressure	175-300 psi (12-20 bar)
Suction pressure	10-30 psi (1-2 bar)
Compressor Drive Belt	
Size	1/2 in. (12.7 mm)
Tension	1/4 in. (6.35 mm) deflection, 15 lb. (66.7 N) pull
Compressor Clutch Coil	
Current draw (at 12 volts)	2.5 amps
Resistance	3.0 ohms at 80°F (26.7°C)
Condenser	
Pressure drop in core	2-3 psi (138-207 mbar)
Evaporator	
Pressure drop in core	5-7 psi (345-483 mbar)
Air flow across core	400-450 cfm (0.19-0.21 m^3/s)
Expansion Valve	
Superheat setting	Approx. 6°F (14.4°C)
Thermostatic Temperature Control Switch Cold Settings	
Evaporator refrigerant temperature	
Contact points open (lower temp. limit)	30°F (−1.1°C) ± 1°F (−17.2°C)
Contact points close (upper temp. limit)	37°F (2.78°C) ± 1°F (−17.2°C)
Thermostatic Safety Switch	
Switch opens	170°F (77°C) ± 5°F (−15°C)
Switch closes	150°F (66°C) ± 5°F (−15°C)
Compressor Relief Valve	
Valve opens	440 psi (30 bar)
Pressurizer Motors and Blowers	
Maximum current draw (at 12 volts)	9 amps
Air flow	400-450 cfm (0.19-0.21 m^3/s)
Reed head-to-shell nuts	25-28 ft-lbs (34-38 Nm)
Rear head-to-shell nuts	15 ft-lbs (20 Nm)
Compressor refrigerant valve retaining cap screw	35 ft-lbs (47 Nm)

Litho in U.S.A.

SPECIFICATIONS—Continued

Heating System

Item	Specification
Heater Valve	
Flow rate (at 5 psi [345 mbar])	Approx. 7 gpm (26.5 l/min)
Heating system flow rate	3.5 gpm (13.3 l/min)

Seat

Support rail-to-suspension roller side play	0.005-0.030 in. (0.13-0.76 mm)
Shock absorber spring tension when new and compressed 5.26 in. (133.5 mm)	650-794 lbs. (2890.5-3532.5 N)

Miscellaneous Components

Door stop latch spring length	1.00-1.06 in. (25.4-26.9 mm)

Hose and Tubing Flare Connection Torques

Metal Tube Outside Diameter inches	Thread and Fitting Size inches	Steel Tubing** Torque ft-lbs (Nm)	Aluminum or Copper Tubing* Torque ft-lbs (Nm)	Nominal Torque Wrench Span (inches)
1/4	7/16	10-35 (14-47)	5-7 (7-9)	5/8
3/8	5/8	30-35 (41-47)	11-13 (15-18)	3/4
1/2	3/4	30-35 (41-47)	11-13 (15-18)	7/8
5/8	7/8	30-35 (41-47)	18-21 (24-29)	1-1/16
3/4	1-1/16	30-35 (41-47)	23-28 (31-38)	1-1/4

**If a connection is made with steel to aluminum or copper, use the lower torque specification.*
***Use steel tubing torques only when both ends of connection are steel.*

Hose and Tubing O-Ring Connection Torques

Metal Tube Outside Diameter inches	Thread and Fitting Size inches	Torque ft-lbs (Nm)
1/4	7/16	10-15 (14-20)
3/8	5/8	10-15 (14-20)
1/2	3/4	24-29 (33-39)
5/8	7/8	26-31 (35-42)
3/4	1-1/16	30-35 (41-47)

Litho in U.S.A.

SPECIFICATIONS—Continued

CAP SCREW TORQUE CHART ft-lbs (Nm)

Bolt Diameter	Plain Head*	Three Radial Dashes*	Six Radial Dashes*
1/4	6 (8)	10 (14)	14 (19)
5/16	13 (18)	20 (27)	30 (41)
3/8	23 (32)	35 (47)	50 (68)
7/16	35 (47)	55 (75)	80 (108)
1/2	55 (75)	85 (115)	120 (163)
9/16	75 (102)	130 (176)	175 (237)
5/8	105 (142)	170 (230)	240 (325)
3/4	185 (244)	300 (407)	425 (576)
7/8	**160 (217)	445 (603)	685 (925)
1	**250 (339)	670 (908)	1030 (1396)

**The types of bolts and cap screws are identified by head markings as follows:*

Plain Head: regular machine bolts and cap screws.

3-Dash Head: tempered steel high-strength bolts and cap screws.

6-Dash Head: tempered steel extra high-strength bolts and cap screws.

***Machine bolts and cap screws 7/8-inch and larger are sometimes formed hot rather than cold, which accounts for the lower torque.*

SPECIAL TOOLS

No.	Name	Use
2051†	Manifold Pressure Gauge Set	Testing system pressures
2054†	Safety Goggles	Protecting eyes
JDST-22	Halogen Leak Detector	Detecting refrigerant leaks
2046†	Air Conditioning Wrench	Adjusting service valves
2055†	Pocket Thermometer	Measuring outlet air temperature
2056†	Refrigerant Can Dispensing Valve	Using pressurized refrigerant cans
2088	Universal Refrigerant Can Dispenser	Using pressurized refrigerant cans
JDST-26-3	Portable Vacuum Pump	Evacuating system
2014††	Seal Kit	Remove and replace compressor seal and O-rings
2015††	Universal Pulley Puller	Removing compressor pulley
2016††	Universal Clutch Service Kit	Removing and installing clutch hub
2017††	Universal Bearing Service Set	Remove and install pulley bearing
2018††	Clutch Holding Wrench	Removing hub and drive plate
2020††	Snap Ring Pliers	Removing retainer rings
2050	Test Plate	Testing compressor for leaks
2120††	Seal Seat Remover	Removing ceramic seal seat
2121††	Seal Sleeve Protector	Installing compressor shaft seal
2122††	Expansion Valve Screen Remover	Removing expansion valve screen
JDST-26-4A	Shield Installation Tool	Installing front (rotating) portion of pulley bearing front shield
JDST-26-4B	Shield Installation Tool	Installing rear (stationary) portion of pulley bearing front shield
D-01006AA (JDM-16)	Bench Fixture	Used to support air conditioning compressor during repair.

SPECIAL TOOLS—Continued

No.	Name	Use
JDST-29	Weatherstrip Tool	Positioning weatherstrip molding "lips" when removing or installing curved glass in Sound-Gard Body
JDG-14	Adapter	Mounts on JDG-10-2 Sound-Gard Body support stand
JDG-15	Lifting Bar	Removing and installing Sound-Gard Body
JDG-20-1	Upper Fixture	Installing hinges
JDG-20-2	Lower Fixture	Installing lower hinge
JDG-20-3	Hinge Fixture	Positioning upper hinge correctly

†Air Conditioner Test Equipment Set No. JDST-26-1
††Air Conditioner Compressor Service Tool Kit No. JDST-26-2
Order from: Service Tools, P.O. Box 314, Owatonna, Minnesota 55060

Litho in U.S.A.

Section 90
MISCELLANEOUS

CONTENTS OF THIS SECTION

Page

GROUP 5 - WHEELS
General Information 5-1
Removal 5-1
Repair 5-1
Installation 5-2

Page

GROUP 10 - SPECIFICATIONS..... 10-1

Group 5
WHEELS

GENERAL INFORMATION

Both the 8430 and 8630 tractor main drive wheels are of the cast disk type mounted on Rack and Pinion axles. When double wheels are used (either front or rear), the outer wheel may be a cast or steel disk type.

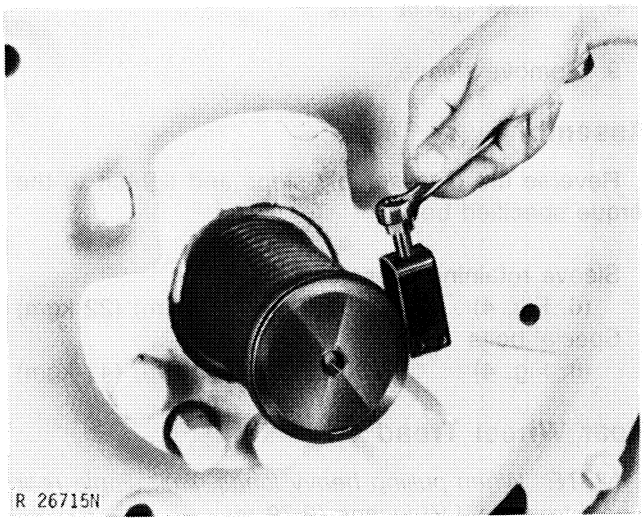

Fig. 1-Removing Snap Ring

To remove or change position of a rear wheel, follow the instructions given in the Operator's Manual. Use JDG-18 Snap Ring Tool to remove snap ring from axle. (See Fig. 1.)

Removal

1. (Not Illustrated). Clean the axle with a steel brush.

2. (Not Illustrated). Position the tractor so that the rack on the axle is up.

3. (Not Illustrated). Jack up the tractor.

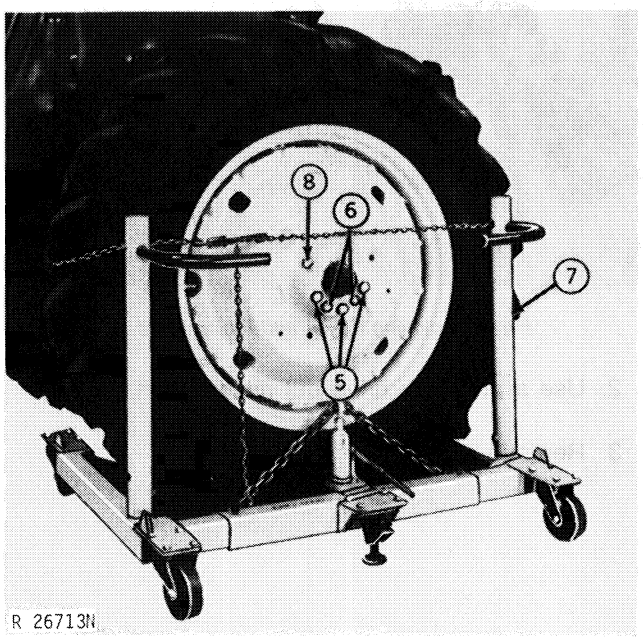

Fig. 2-Removing Wheel

4. Use JDG-18 Snap Ring Tool to remove axle snap ring (Fig. 1).

5. Loosen the three special bolts approximately 3/8 in. (10 mm).

Litho in U.S.A.

Removal—Continued

6. Tighten the two jack screws evenly (maximum 200 ft-lbs [271 Nm] [27.1 kgm] torque) until the sleeve loosens.

7. Move D-05018ST Wheel Lift into position.

8. Turn the pinion gear to move wheel off of axle.

NOTE: If sleeve is difficult to break loose, also loosen the three special screws on inside of the wheel. If sleeve will still not break loose, strike the end of the axle several times with a heavy hammer; then evenly retighten the jack screws. Repeat this procedure until the sleeve loosens.

Disassembly

1. (Not Illustrated). Remove plug from hub which covers pinion shaft hole.

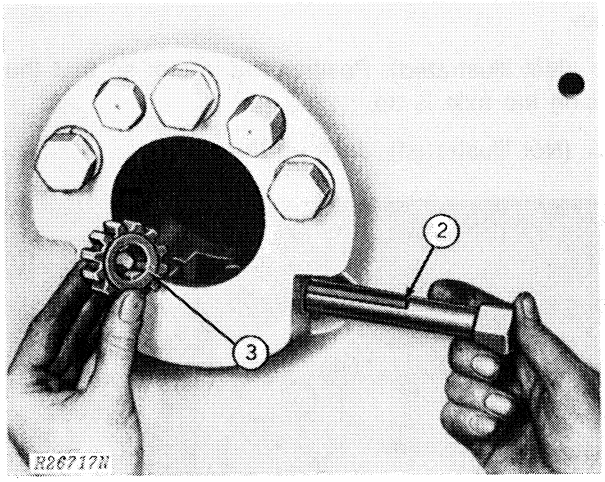

Fig. 3-Removing Pinion and Pinion Shaft

2. Use a punch to drive out pinion shaft.

3. Remove pinion from wheel.

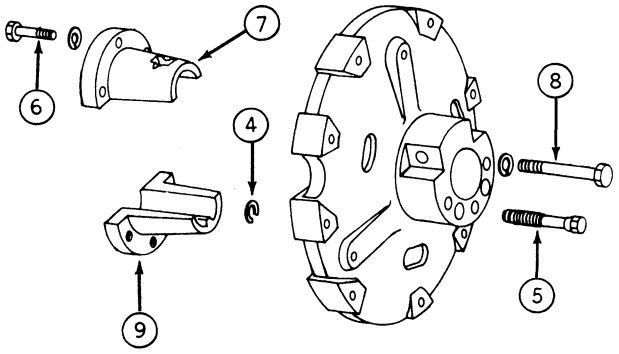

R 26718N

Fig. 4-Cast Disk Drive Wheel

4. Remove retaining rings from the two jack screws.

5. Remove jack screws.

6. Remove sleeve retaining cap screws.

7. Remove sleeve.

8. Remove special bolts.

9. Remove sleeve.

Assembly

Reverse the disassembly steps and tighten to the torque specified below.

Sleeve retaining capscrews
(6, Fig. 4) . . . . . 160 ft-lbs (217 Nm) (22 kgm)
Special bolts
(8, Fig. 4) . . . . . 300 ft-lbs (300 Nm) (41 kgm)

Rear Wheel Tread

NOTE: When pulling heavy loads, limit single rear wheel tread to 110 inches (2.79 m).

IMPORTANT: Tires must have at least one inch (25 mm) clearance with the fenders.

DOUBLE REAR WHEELS

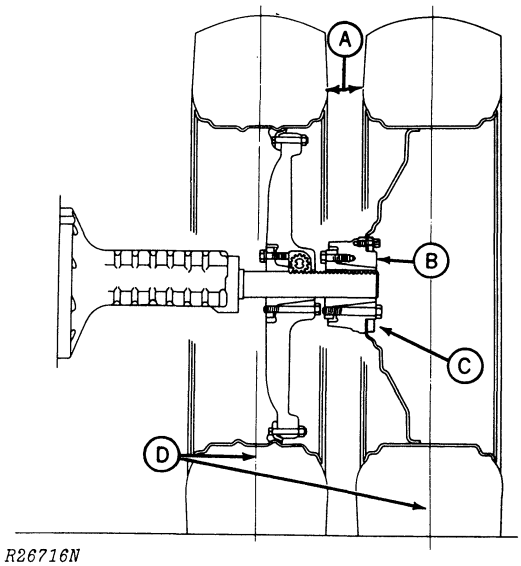

R26716N

A—Minimum Gap of 4″ Between Tires
B—Hub
C—Wheel Retaining Ring*
D—Center of Tires

Fig. 5-Wheel Spacing

**NOTE: Wheels using nine bolts use the retaining ring (C, Fig. 5). Ten bolt wheels use washers.*

When using double wheels, always maintain a minimum gap (A, Fig. 5) of 4 inches (100 mm) between tires. Insufficient gap may damage tires.

When a wheel must be repositioned or removed, it is very important that the inner wheel rim clamp nuts and hub special bolts be securely tightened. The outer steel disk wheel retaining cap screws should be tightened to 300 ft-lbs (407 Nm) (40.7 kgm) torque on 10-bolt wheels and 240 ft-lbs (325 Nm) (32.5 kgm) on 9-bolt wheels. After driving tractor for about 20 revolutions of the wheel, and BEFORE working tractor, retighten wheel retaining cap screws to specified torque. After working tractor for about 3 hours and again at 10 hours, retighten wheel retaining cap screws and keep them tight.

When removing a double wheel for single wheel operation, always remove the steel disk wheel and operate tractor on the cast disk wheel. Be sure to operate within the single wheel tread limitations.

Litho in U.S.A.

Group 10
SPECIFICATIONS

SPECIFICATIONS

Item	Specifications
Front and Rear Wheels	
Cast Disk (Rack and Pinion Axle) (Single or Dual Wheel)	
Wheel-to-axle sleeve torque (Keyed sleeve)	300 ft-lbs (407 Nm)
Pinion sleeve retaining cap screws	170 ft-lbs (230 Nm)
Rim-to-Wheel torque	160 ft-lbs (217 Nm)
Steel Disk or Cast Disk	
(Outer Wheel When Dual Wheels Are Used)	
Wheel-to-axle hub torque (10-Bolt Wheel)	300 ft-lbs (407 Nm)
(9-Bolt Wheel)	240 ft-lbs (325 Nm)
Hub-to-Axle Sleeve Torque	
Pinion sleeve retaining cap screws	160 ft-lbs (217 Nm)
Keyed sleeve special bolts	300 ft-lbs (407 Nm)

**Use "F" grade cap screws only (6 radial marks).*

Litho in U.S.A.

Litho in U.S.A.

PDF
DOWNLOAD