John Deere 345GLC Excavator Repair Technical Manual (TM14304X19)

345GLC Excavator Repair

(PIN: 1FF345GX_ _F020001—)

JOHN HARE

COLLECTION

REPAIR TECHNICAL MANUAL
345GLC Excavator

(PIN: 1FF345GX_ _F020001—)

TM14304X19 01DEC18 (ENGLISH)

For complete service information also see:

345GLC Excavator Diagnostic TM14303X19

PDF DOWNLOAD

Worldwide Construction and Forestry Division

Covers: 345GLC,1FF345GX_,_F020001)

Type: Service Manual
Language: English
Pages: 434
Format: PDF
Features: Bookmarked, searchable, printable
Compatibility: Windows/Mac/Tablet/Mobile
This service manual contains important information for the maintenance, troubleshooting and servicing of the **John Deere 345GLC Excavator Repair Technical Manual (TM14304X19)**

In this manual you will find detailed specifications, illustrations, schematics, diagrams and step-by-step procedures to properly service and diagnose the machine to the manufacturer's standards.

Contents:
- General Information
- Specifications
- Serial Number Location
- Engine Specifications
- Engine Diagnostics
- Engine Tests and Adjustments
- Engine Repair
- Power Train
- Transmission
- Axles
- Differential
- PTO
- Hydraulic System
- Electrical System
- Electrical Tests and Diagnostics
- Wiring Diagram / Schematic
- Ignition and Charging
- Steering
- Brakes
- Wheels
- Operator's Platform
- Body Panels
- Disassembly and Assembly
- Diagnostics, Tests and Adjustments
- Troubleshooting
- and much more...

Please note this manual is in **downloadable PDF format only.** If you have any questions about this product or would like to request sample pages, please contact us and reference the product name or SKU.

7. CAUTION:
Prevent possible crushing injury from heavy component. Use appropriate lifting device.

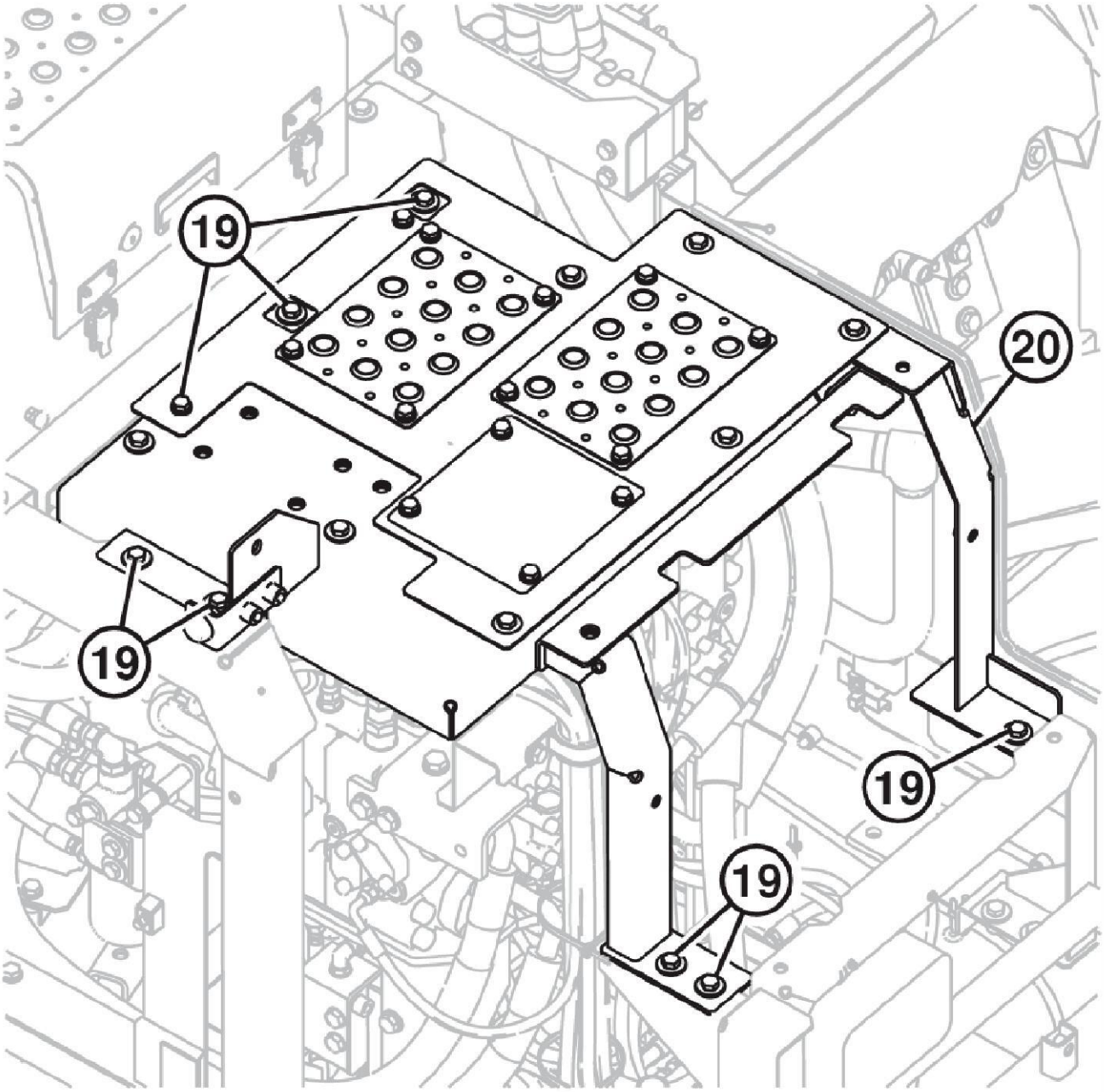

TX1257581-UN: Upper Step Cover and Bracket

LEGEND:

19-Cap Screw (8 used) **20-Step Bracket**

Attach appropriate lifting device to step bracket (20). Remove cap screws (19) and step bracket.

Item	Measurement	Specification
Step Bracket	Weight (approximate)	39 kg 85 lb

10.

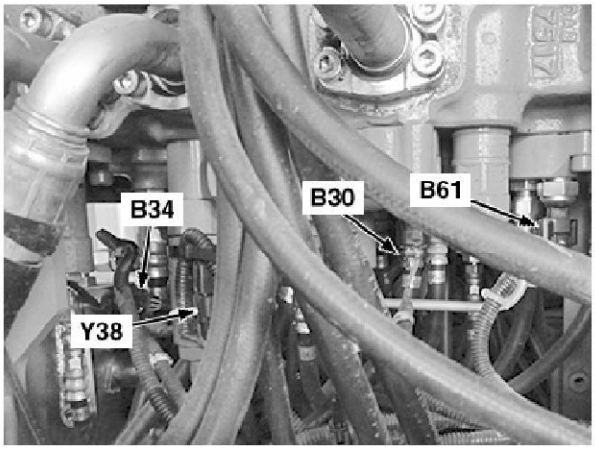

TX1257673A-UN: Sensors and Attachment Relief Solenoid (bottom side)

LEGEND:

B30-Boom Up Pressure Sensor (marked PI1)
B34-Travel Pressure Sensor (marked TR)
B61-Arm Out Pressure Sensor (marked AMD)
Y38-Attachment Relief Solenoid (marked REL1)

Install identification tags and disconnect sensors (B30, B34, and B61). See Machine Harness (W2) Component Location - document TM14303X19 - (Group 9015-10.)

11. Install identification tags and disconnect attachment relief solenoid (Y38). See Attachment Harness (W17) Component Location - document TM14303X19 - (Group 9015-10.)

12.

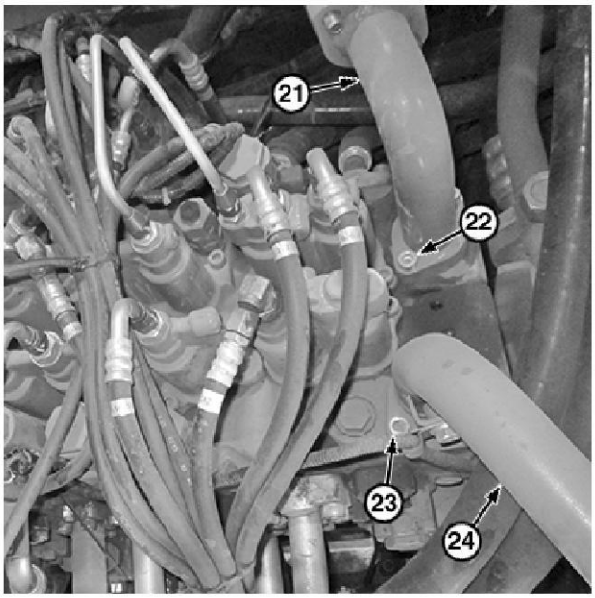

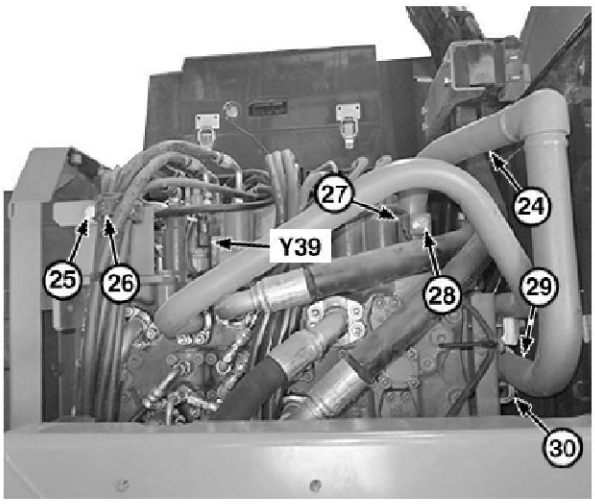

TX1257932A-UN: Control Valve Lines

TX1257675A-UN: Clamps and Lines

LEGEND:

21-Control Valve-to-Hydraulic Oil Tank Return Line
22-Cap Screw (2 used)
23-Cap Screw (2 used)
24-Control Valve-to-Hydraulic Oil Cooler Line
25-Cap Screw
26-Clamp
27-Clamp
28-Cap Screw
29-Cap Screw
30-Clamp
Y39-Attachment Relief Solenoid 2 (marked REL2)

Install identification tags to lines (21 and 24).

13. Remove cap screws (22, 23, 25, 28, and 29) and clamps (26, 27, and 30) and disconnect lines (21 and 24). Close all openings using caps and plugs.

14. Install identification tags and disconnect attachment relief solenoid 2 (marked REL2) (Y39). See Attachment Harness (W17) Component Location - document TM14303X19 - (Group 9015-10.)

PDF DOWNLOAD

Thank you very much
for your reading.
Please click here
to get more information.