John Deere E400LC Excavator Repair Technical Manual (TM14316X19)

E400LC Excavator Repair

(PIN: 1YNE40AL_ _Cxxxxxx—,
PIN: 1YNE40AL_ _Dxxxxxx—)

JOHN HARE

COLLECTION

REPAIR TECHNICAL MANUAL

E400LC Excavator

(PIN: 1YNE40AL_ _Cxxxxxx—, PIN: 1YNE40AL_ _Dxxxxxx—)

TM14316X19 01DEC18 (ENGLISH)

For complete service information also see:

E400LC Excavator Operation and Test TM14316X19
PowerTech 9.0L OEM Diesel Engines 60SC Tier 3 / Stage
II A Emissions Certified Base Engine Repair CTM400

John Deere Tianjin
Construction Works

Covers: E400LC,1YNE40AL_,1YNE40AL_

Type: Service Manual
Language: English
Pages: 307
Format: PDF
Features: Bookmarked, searchable, printable
Compatibility: Windows/Mac/Tablet/Mobile
This service manual contains important information for the maintenance, troubleshooting and servicing of the **John Deere E400LC Excavator Repair Technical Manual (TM14316X19)**

In this manual you will find detailed specifications, illustrations, schematics, diagrams and step-by-step procedures to properly service and diagnose the machine to the manufacturer's standards.

Contents:
- General Information
- Specifications
- Serial Number Location
- Engine Specifications
- Engine Diagnostics
- Engine Tests and Adjustments
- Engine Repair
- Power Train
- Transmission
- Axles
- Differential
- PTO
- Hydraulic System
- Electrical System
- Electrical Tests and Diagnostics
- Wiring Diagram / Schematic
- Ignition and Charging
- Steering
- Brakes
- Wheels
- Operator's Platform
- Body Panels
- Disassembly and Assembly
- Diagnostics, Tests and Adjustments
- Troubleshooting
- and much more...

Manual Identification—READ THIS FIRST!

IMPORTANT:
Use only supporting manuals designated for the specific machine. If incorrect manual is chosen, improper service may occur. Verify product identification number (PIN) when choosing the correct manual.

Choosing the Correct Supporting Manuals

John Deere machines are available in the different machine configurations based on the various markets into which they are sold. Different supporting manuals exist for the different machine configurations.

When necessary, PINs are listed on the front covers of manuals. These numbers are used to identify the correct supporting manual for the machine.

Product Identification Number— The product identification number (PIN) plate (1 or 5) is located on the right side of the cab. Each machine has a 17-character PIN (2) shown on PIN plate.

Environmental Information Disclosure Number (China market only)— The environmental protection information label (3) is located on the right side of the cab. Environmental information disclosure number (4) is shown on the environmental protection information label.

NOTE:

For China market, PIN is the machine environmental identification number.

NOTE:

If this machine was certified (homologated) to the requirements of the Eurasian Economic Union (EAEU), there will be a EAC marking affixed in the indicated area.

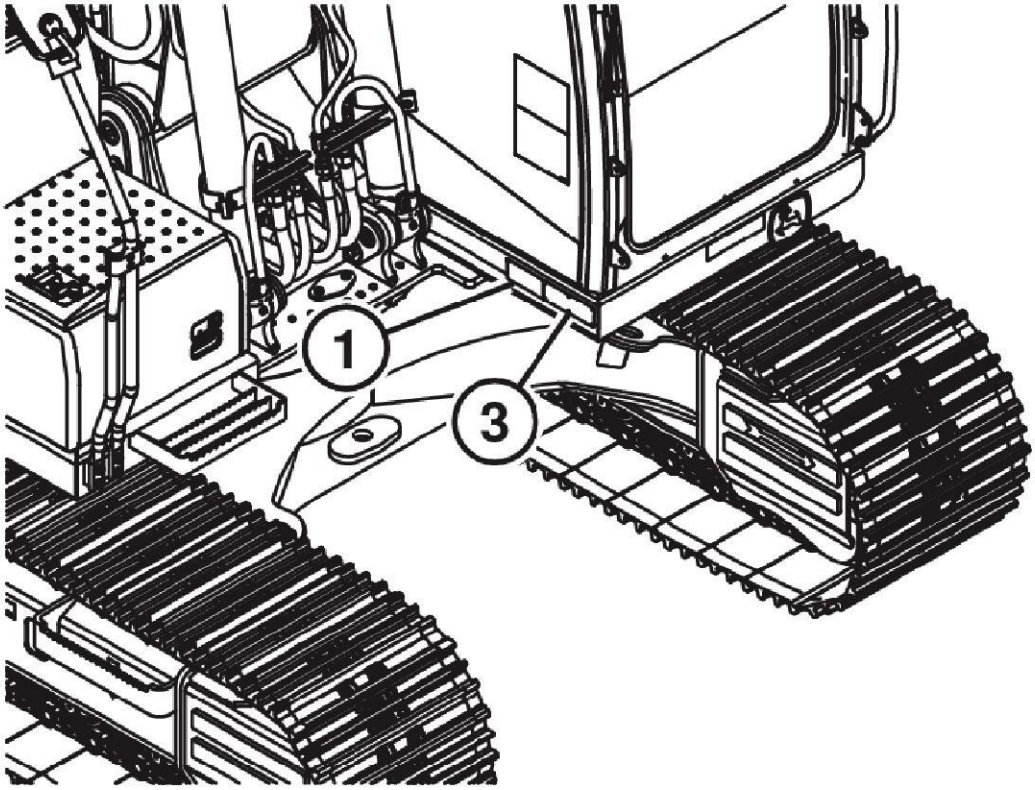

YN1245847-UN: PIN Plate and Environmental Protection Information Label Locations (China market)

Fan, Fan Guard, and Fan Shroud Remove and Install

1. Park and prepare machine for service. See Park and Prepare for Service Safely . (Group 0001.)
2. Turn battery disconnect switch to OFF.
3. Open hood.

IMPORTANT:
4. **Prevent system contamination. Use a clean container to collect coolant.**

Drain engine coolant. See Drain and Refill Engine Coolant - document OMT381652X19 - (Operator's Manual.)

5. Apply vacuum or drain hydraulic oil tank. See Apply Vacuum to Hydraulic Oil Tank . (Group 3360.) See Drain and Refill Hydraulic Oil . (Operator's Manual.)

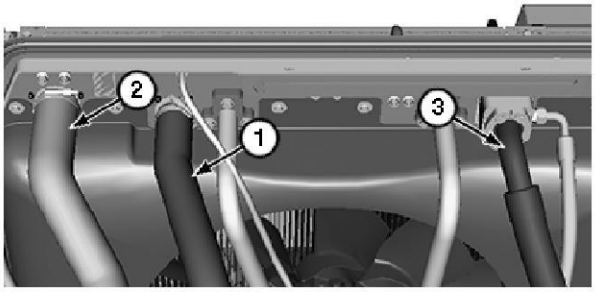

6. YN1254619-UN: Upper Cooling Package Hoses

LEGEND:
1-Upper Charge Air Cooler Tube
2-Upper Radiator Hose
3-Hydraulic Oil Cooler-to-Hydraulic Tank Hose

Install identification tags and remove upper charge air cooler tube (1) and upper radiator hose (2). Close all openings using caps and plugs.

7. Disconnect hydraulic oil cooler-to-hydraulic tank hose (3). Close all openings using caps and plugs.

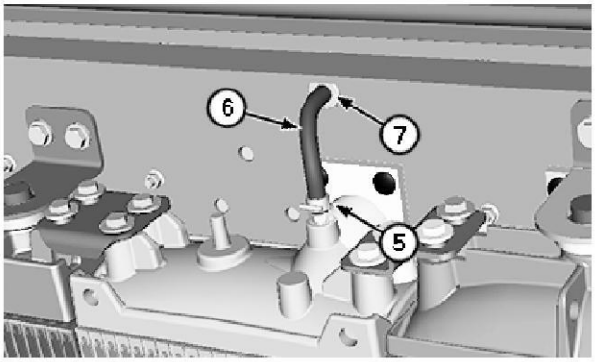

8. YN1254620-UN: Surge Tank Hose

LEGEND:
5-Clamp
6-Radiator-to-Surge Tank Hose
7-Grommet

Install identification tags and disconnect radiator-to-surge tank hose (6). Close all openings using caps and plugs.

9. Pull radiator-to-surge tank hose through grommet (7).

IMPORTANT:
10. **Prevent possible damage to fan shroud (25). Hydraulic oil cooler-to-fan drive motor hose (27) must be disconnected from hydraulic oil cooler.**

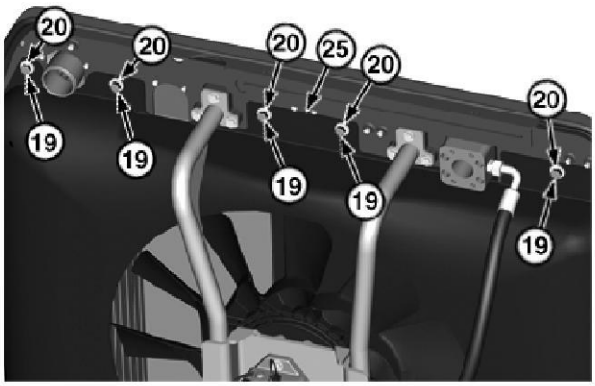

TX1160171A-UN: Fan Shroud

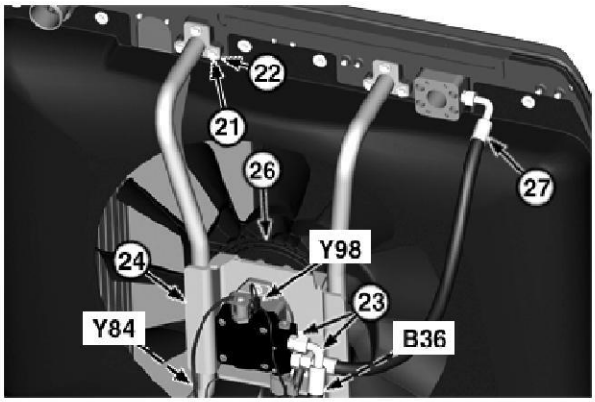

TX1160172A-UN: Fan Motor Mount, Fan Shroud, and Fan

LEGEND:
19-Cap Screw (9 used)
20-Washer (9 used)
21-Cap Screw (12 used)
22-Washer (12 used)
23-Hydraulic Hose (2 used)
24-Fan Motor Mount
25-Fan Shroud
26-Fan
27-Hydraulic Oil Cooler-to-Fan Drive Motor Hose
B36-Fan Speed Sensor
Y84-Fan Drive Proportional Solenoid
Y98-Reverse Fan Drive Solenoid

Disconnect hydraulic oil cooler-to-fan drive motor hose (27) from hydraulic oil cooler. Close all openings using caps and plugs.

11. Disconnect hydraulic hoses (23) from fan drive motor. Close all openings using caps and plugs.
12. Install identification tags and disconnect fan speed sensor (B36), fan drive proportional solenoid (Y84), and reverse fan drive solenoid (Y98). See Frame Harness (W10) Component Location - document TM14315X19 - (Group 9015-10.)