2011 Doosan SD 200 Wheeled Excavator Service Repair Workshop Manual

PDF DOWNLOAD

Shop Manual
DX85R-3 Excavator

Serial Number 1001 and Up

DOOSAN and the DOOSAN logo are registered trademarks of DOOSAN Corporation in the United States and various other countries around the world.

950106-01030E

April 2013

Copyright DOOSAN 2013

Original Instructions

Remove engine oil filter as follows:

1. Turn the engine oil filter (2, Figure 65) counterclockwise (3, Figure 65) using a filter wrench.
2. Clean the engine oil filter mounting face.
3. Lightly coat the gasket on the new oil filter with engine oil. Install the new engine oil filter manually by turning it clockwise (4, Figure 65) until it contacts the mounting surface. Tighten an additional 3/4 of a turn using the filter wrench.

Engine Oil Filter Part No.	
Standard	**Dust Proof***
119005-35151	119005-35151

*Consult the operation manual for the driven machine for applicability of the dust proof filter.

4. Add new engine oil to the engine as specified in "Engine Oil" on page -55.

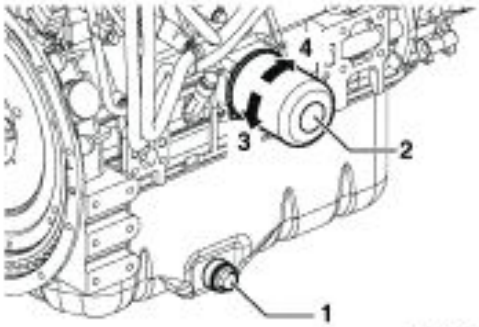

EX1300059

Figure 65

⚠ CAUTION

AVOID INJURY

Never overfill the engine with engine oil.

Always keep the oil level between the upper and lower lines on the oil cap/dipstick.

5. Warm up the engine by running it for five minutes and check for any engine oil leaks.
6. After engine is warm, shut it off and let it sit for 10 minutes.
7. Recheck the engine oil level.
8. Add engine oil (5, Figure 66) as needed until level is between the upper (2, Figure 66) and lower lines (3, Figure 66) shown on the dipstick (1, Figure 66).
9. Install the oil fill cap (4, Figure 66). If any engine oil is spilled, wipe it away with a clean cloth.

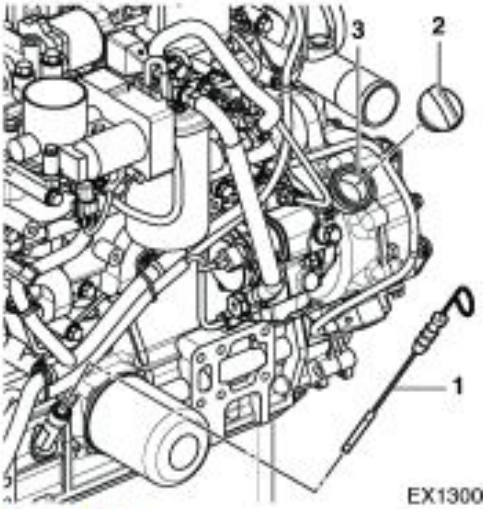

EX1300060

Figure 66

Removal of Common Rail

1. Remove wiring of the injector coupler on the injector.

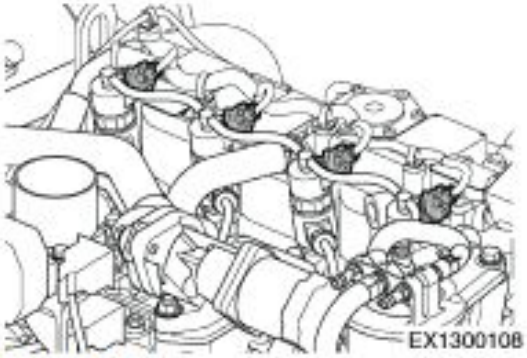

Figure 224

2. Remove wiring coupler of the pressure sensor.

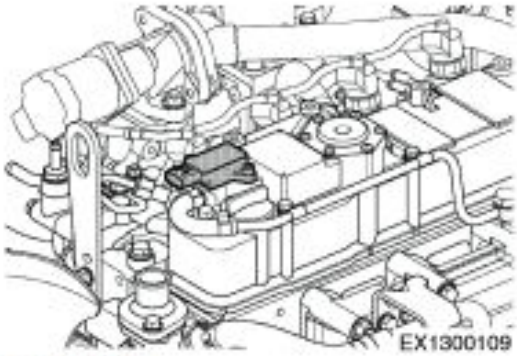

Figure 225

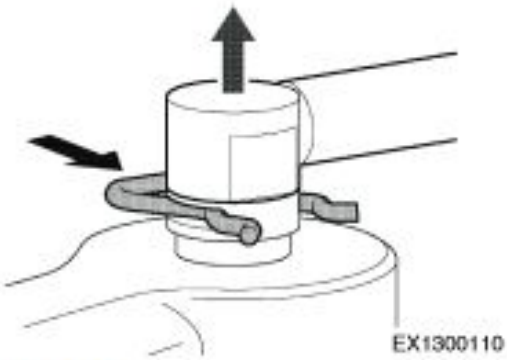

Figure 226

3. Remove leak piping (2, Figure 227) from the pressure limiter (1, Figure 227).

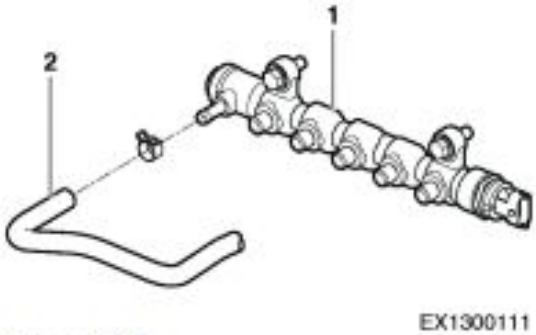

Figure 227

PDF DOWNLOAD

Thank you very much
for your reading.
Please click here
to get more information.