Allison Transmission 4TH Generation Controls Vocational Models Service Repair Manual

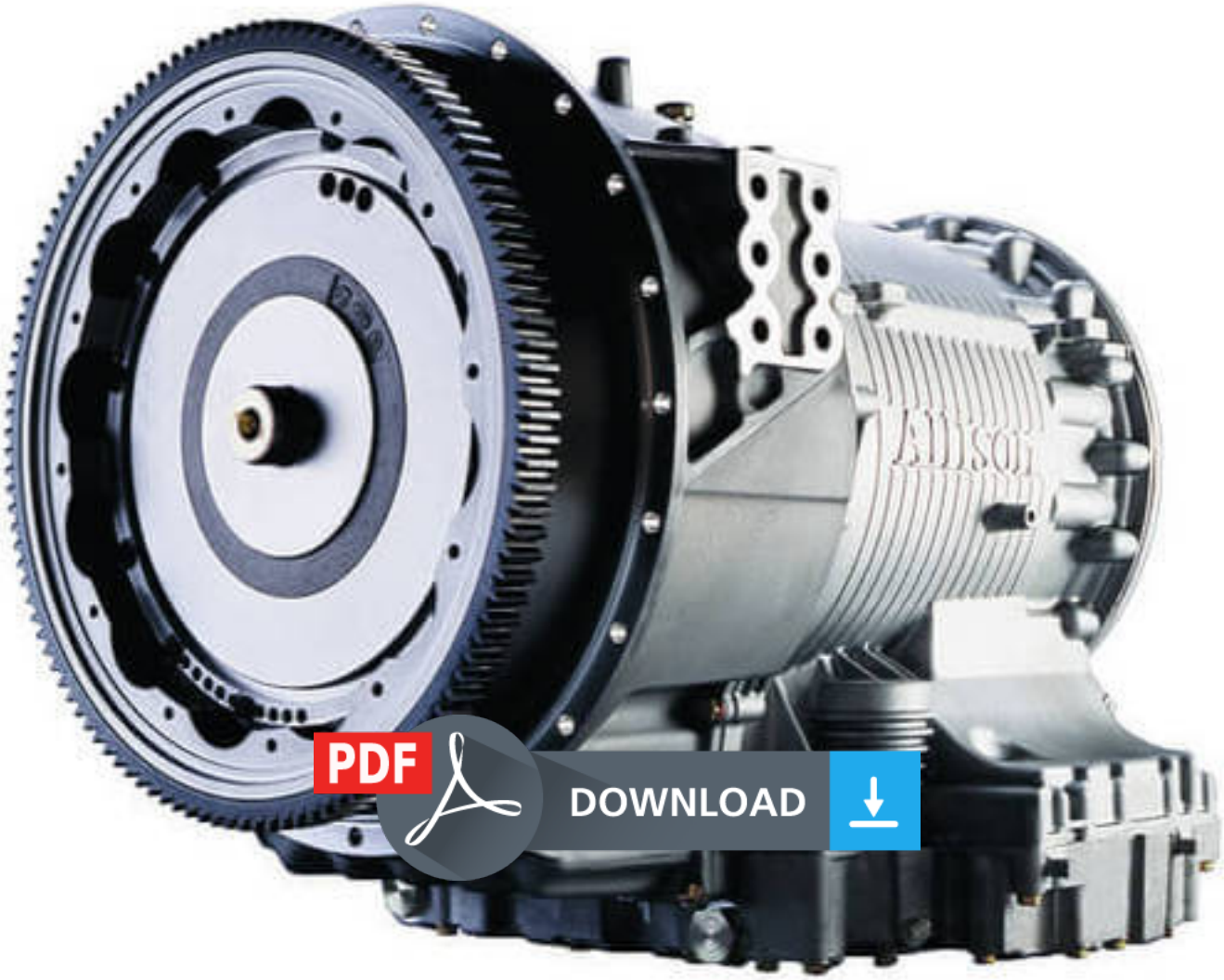

PDF DOWNLOAD

Service Manual

2005 OCTOBER

SM4014EN

Allison Transmission

ALLISON 4TH GENERATION CONTROLS VOCATIONAL MODELS

4000 EVS	4500 EVS	4700 EVS	4800 EVS	B 500
4000 HS	4500 HS	4700 RDS	4800 SP	T 425
4000 MH	4500 RDS	4700 SP		T 450
4000 RDS	4500 SP			T 525
4000 SP				
4000 TRV				

Allison Transmission

Allison Transmission, Inc.
P.O. Box 894 Indianapolis, Indiana 46206-0894
www.allisontransmission.com

Printed in USA

Copyright © 2007 Allison Transmission, Inc

TABLE OF CONTENTS

Paragraph *Page*

Section 1. GENERAL INFORMATION

1–1. SCOPE OF MANUAL
- a. Content And Organization. 1–1
- b. Illustrations. 1–1
- c. Maintenance Information 1–1

1–2. SUPPLEMENTARY INFORMATION 1–5

1–3. ORDERING PARTS
- a. Transmission Nameplate 1–5
- b. Parts Catalog 1–5

1–4. GENERAL DESCRIPTION
- a. Major Modules. 1–5
- b. Unique Features. 1–5

1–5. MAJOR COMPONENTS
- a. Input Module 1–6
- b. Torque Converter 1–6
- c. Power Takeoff 1–6
- d. Main Housing And Gear Module 1–6
- e. Range Clutches 1–6
- f. Control System 1–6
- g. Transmission Fluid Filters 1–6
- h. Transmission Fluid Coolers 1–6
- i. C6 Adapter Housing Module. 1–6
- j. Rear Cover 1–6
- k. Output Retarder And Output Flange 1–6

1–6. 4000 PRODUCT FAMILY MODEL DESIGNATION CODE 1–6

1–7. EXPLODED (DISASSEMBLED) VIEWS. 1–7

1–8. DIAGNOSIS
- a. Before Starting. 1–7
- b. CHECK TRANS Light 1–7
- c. Entering Diagnostic Mode 1–8
- d. Diagnostic Codes. 1–8
- e. Displaying Diagnostic Codes 1–8
- f. Diagnostic Code Displays 1–8
- g. Exiting Diagnostic Mode 1–8

1–9. PRESERVATION AND STORAGE
- a. Storage (New Transmissions, Before Installation) 1–8
- b. Preservation Methods 1–8
- c. One Year Storage (Without Fluid). 1–8
- d. One Year Storage (With Fluid) 1–9

1–10. RESTORING TRANSMISSION TO SERVICE
- a. Transmission Exterior 1–9
- b. Sealed Breather And Openings 1–9
- c. New Transmissions 1–9
- d. Stored Without Fluid 1–9
- e. Stored With Fluid. 1–9

1–11. ELECTROMAGNETIC/RADIO FREQUENCY INTERFERENCE 1–10

1–12. OPERATING INSTRUCTIONS 1–10

1–13. SPECIFICATIONS AND DATA 1–10

Section 2. PREVENTIVE MAINTENANCE

2–1. SCOPE. 2–1

2–2. PERIODIC INSPECTION AND CARE
- a. Exterior Cleaning And Inspection. 2–1

2–3. IMPORTANCE OF PROPER FLUID LEVEL
- a. Transmission Fluid 2–1
- b. Oil Level Sensor 2–1
- c. Electronic Controls And Protection Circuits 2–1

2–4. ELECTRONIC FLUID LEVEL CHECK (WHEN AN OPTIONAL OLS IS PRESENT—FULL-FUNCTION PUSHBUTTON OR LEVER SHIFT SELECTORS)
- a. Fluid Level Check Procedure 2–2

2–5. MANUAL FLUID LEVEL CHECK PROCEDURE
- a. Preparation 2–3
- b. Consistency Of Readings 2–3

2–6. COLD CHECK
- a. Purpose. 2–3
- b. Cold Check Procedure 2–3

2–7. HOT CHECK
- a. Purpose. 2–4
- b. Cold Check Procedure 2–4

2–8. KEEPING FLUID CLEAN. 2–4

2–9. FLUID RECOMMENDATIONS
- a. Fluid Type 2–5

Copyright © 2007 Allison Transmission, Inc.

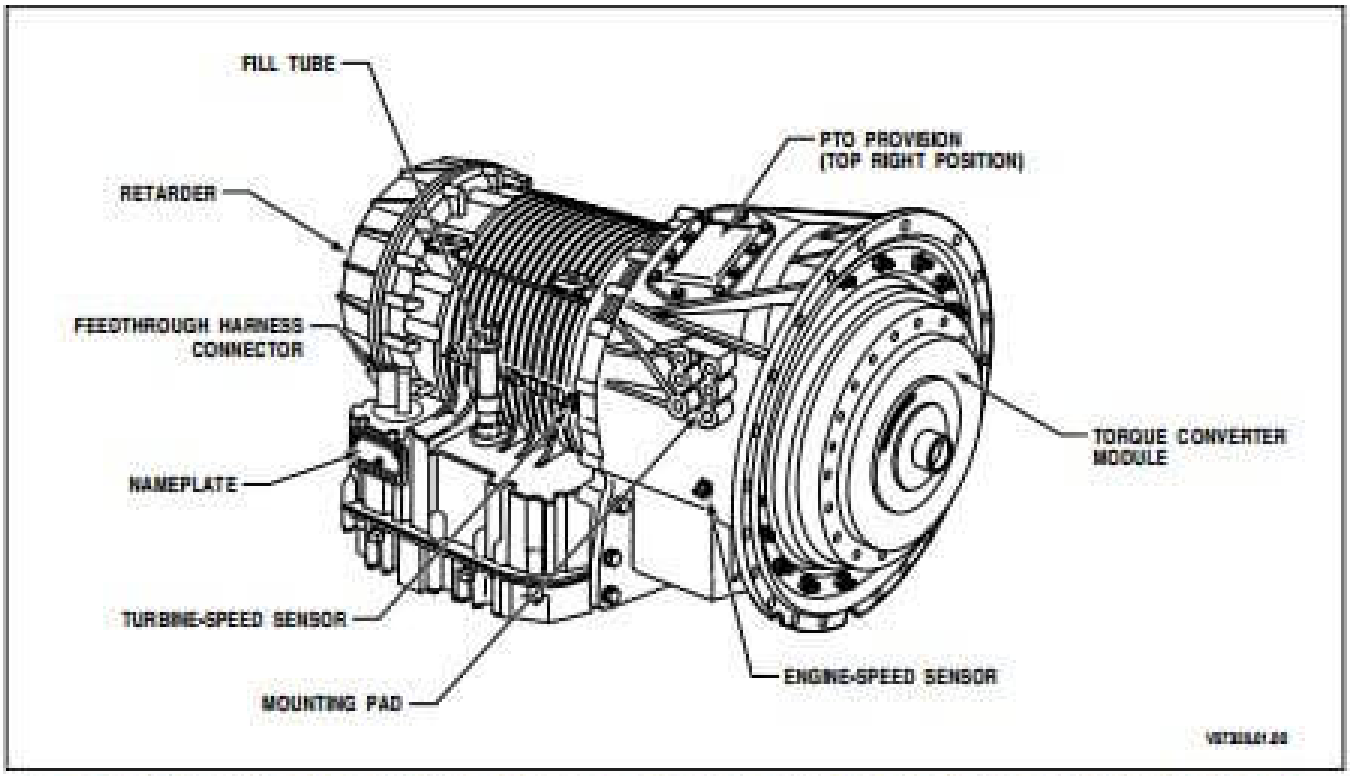

Figure 1–3. 4000 Product Family With PTO Provision and Retarder (Except 4700 and 4800 Models)—Right-Front View

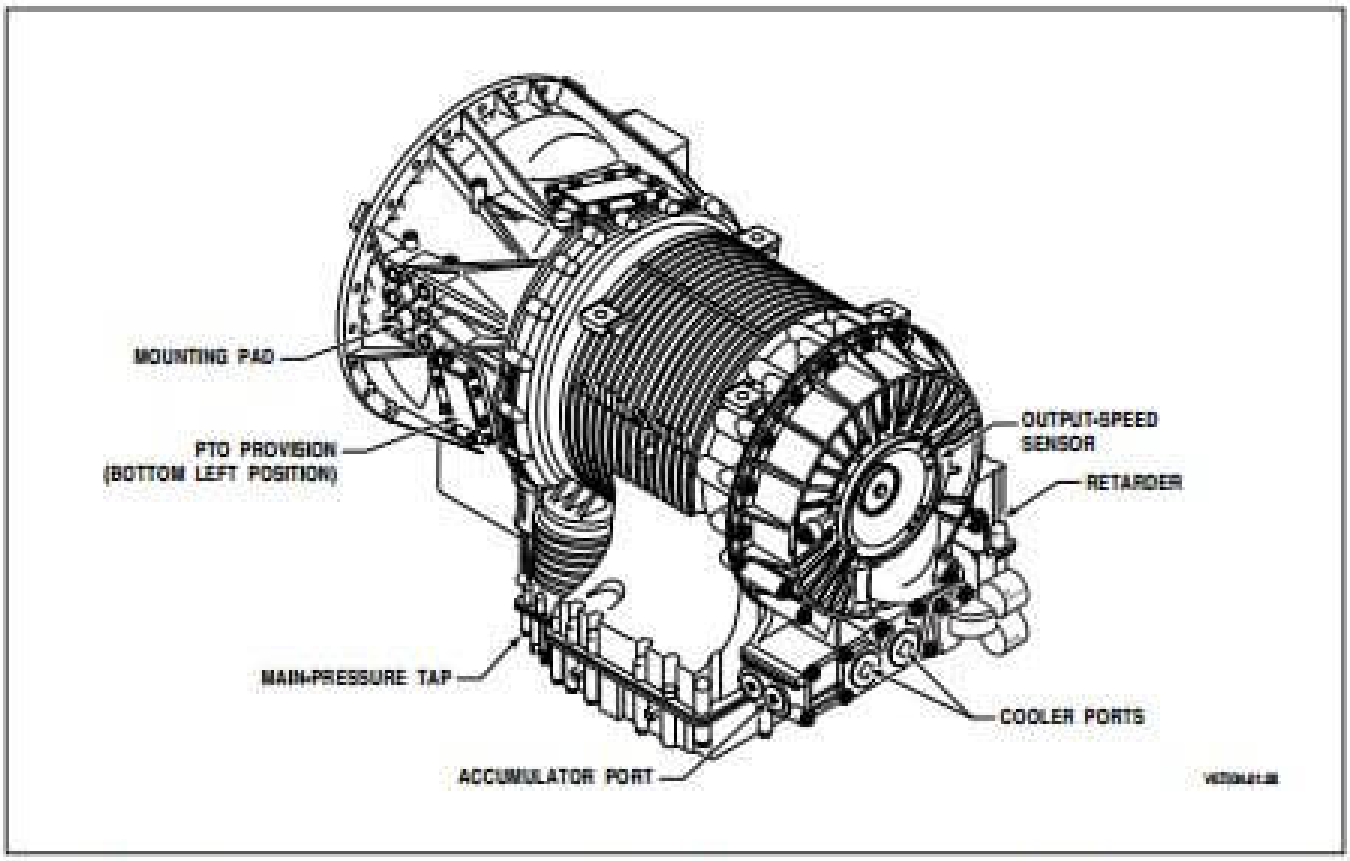

Figure 1–4. 4000 Product Family With PTO Provision and Retarder (Except 4700 and 4800 Models)—Left-Rear View

Copyright © 2007 Allison Transmission, Inc.

PDF DOWNLOAD

Thank you very much
for your reading.
Please click here
to get more information.